RF-15

BUSH HOG®

FLEX-WING MECHANICAL LEVEL LIFT ROTARY CUTTER/SHREDDER

Published 09/13

Part NO. 50071181

OPERATOR'S MANUAL

This Operator's Manual is an integral part of the safe operation of this machine and must be maintained with the unit at all times. READ, UNDERSTAND, and FOLLOW the Safety and Operation Instructions contained in this manual before operating the equipment. *C01-Cover_B*

Safety Video

Important Operating and Safety Instructions are found in the Mower Safety Video that can be instantly accessed on the internet at: www.algqr.com/bve

www.algqr.com/bve

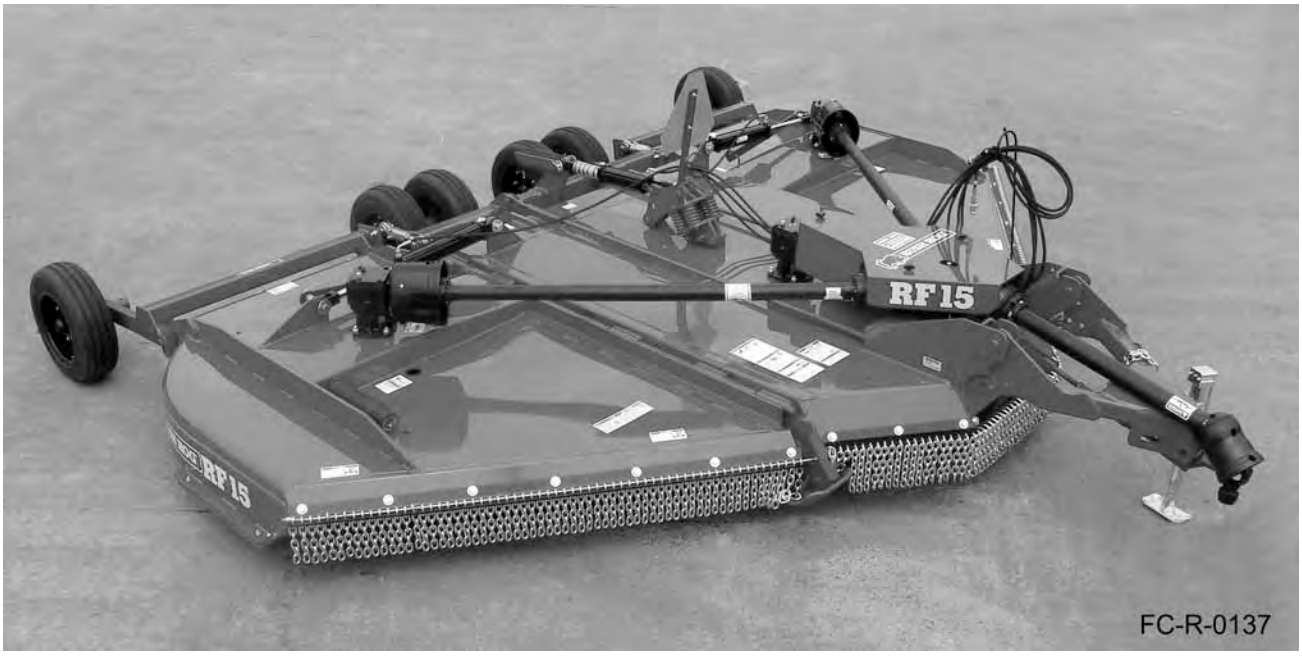

BUSH HOG®
2501 Griffin Ave.
Selma, AL 36703
334-874-2700
www.bushhog.com

Bush Hog Web Page

www.algqr.com/bwe

¡ATENCIÓN!
LEA EL INSTRUCTIVO
Si No Lee Ingles, Pida Ayuda a Alguien Que Se Lo Lea Para Que le Traduzca Las Medidas de Seguridad

MEMBER OF THE ALAMO GROUP
ALWAYS ON THE CUTTING EDGE®

©2012 Alamo Group Inc.

$0.00

⚠ PELIGRO

Si no puede leer inglés: antes de poner en funcionamiento este equipo, solicite que alguien le traduzca los mensajes de seguridad o vaya al sitio web para consultar los mensajes de seguridad y las etiquetas ya traducidos.

El Manual del Operador **Seguridad vídeo**

www.algqr.com/bms www.algqr.com/bvs

⚠ DANGER

Si vous ne savez pas lire le français: avant d'utiliser l'équipement, demandez à une personne de vous traduire les messages de sécurité ou allez sur le site Internet pour voir la traduction des autocollants et des messages de sécurité.

Manuel de l'Opérateur

D813_1 www.algqr.com/bmf

⚠ PERIGO

Caso você não leia inglês: antes de operar o equipamento, peça para alguém traduzir as mensagens de segurança ou visite a web e obtenha tais mensagens ou os decalques traduzidos.

Manual do Operador

www.algqr.com/bmp

⚠ GEFAHR

Falls Sie Deutsch nicht lesen können: Lassen Sie sich, bevor Sie das Gerät in Betrieb nehmen, die Sicherheitshinweise von einer geeigneten Person in Ihre Sprache übersetzen. Oder suchen Sie auf unserer Website nach Übersetzungen von Schilderaufschriften und Sicherheitshinweisen.

Benutzerhandbuch

D813_2 www.algqr.com/bmg

Safety Video

www.algqr.com/bve

Operator's & Parts Manuals

www.algqr.com/bpm

General Safety

www.algqr.com/bme

Safety Video

➢ BE SAFE!

➢ BE ALERT!

➢ BE ALIVE!

www.algqr.com/bve

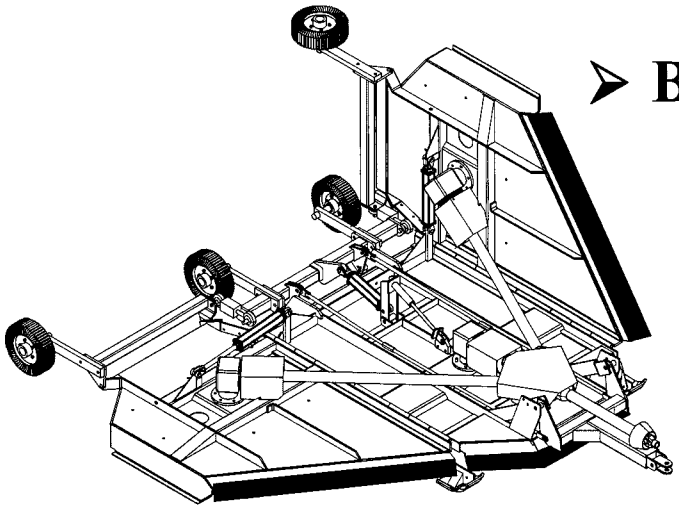

➢ BE TRAINED before operating the Mower!

BUSH HOG

Safety Training Makes the Difference

In order to reduce accidents and enhance the safe operation of mowers, *Bush Hog,* in cooperation with other industry manufacturers has developed the AEM/FEMA Industrial and Agricultural Mower Safety Practices video and guide book.

The video will familiarize and instruct mower-tractor operators in safe practices when using industrial and agricultural mowing equipment. It is important that Every Mower Operator be educated in the operation of their mowing equipment and be able to recognize the potential hazards that can occur while operating a mower. This video, along with the mower operator's manual and the warning messages on the mower, will significantly assist in this important education.

Your Authorized *Bush Hog* Dealer may have shown this video and presented you a DVD Video when you purchased your mower. If you or any mower operator have not seen this video, **Watch** the **Video, Read** this **Operator's Manual,** and **Complete** the **Video Guidebook** before operating your new mower. If you do not understand any of the instructions included in the video or operator's manual or if you have any questions concerning safety of operation, contact your supervisor, dealer or *Bush Hog.*

If you would like a VHS video tape of the video, please mail AEMVideo@alamo-group.com or Fax AEM VHS Video at (830) 372-9529 or mail in a completed copy of the form on the back of this page to AEM VHS Video 1502 E Walnut Street, Seguin, TX 78155. and request the VHS video version. Please include your name, mailing address, mower model and serial number.

Every operator should be trained for each piece of equipment (Tractor and Mower), understand the intended use, and the potential hazards before operating the equipment.

The information and material listed above along with this Operator's Manual can assist you in meeting the OSHA requirement for annual operator training.

OSHA TRAINING REQUIREMENTS

The following training requirements have been taken from *Title 29, Code of Federal Regulations Part 1928.57* (a) (6). www.osha.gov

Operator instructions. At the time of initial assignment and at least annually thereafter the employer shall instruct every employee who operates an agricultural tractor and implements in the safe operating practices and servicing of equipment with which they are or will be involved, and of any other practices dictated by the work environment.

Bush Hog will provide
one (1) AEM Mower Safety Practices Video

Please Send Me: ☐ VHS Format – AEM/FEMA Mower Operator Safety Video

☐ DVD Format – AEM/FEMA Mower Operator Safety Video

☐ Mower Operator's Manual

☐ AEM Mower Operator's Safety Manual

Requester Name _____ Phone: _____

Requester Address: _____

City _____

State _____

Zip Code _____

Mower Model: _____ Serial Number: _____

Date Purchased: _____ Dealer Salesperson: _____

Dealership Name: _____ Dealership Location: _____

Mail to:

AEM Video Services

1502 E. Walnut Street

Seguin, TX 78155

Or Fax to:

(830) 372-9529

Or Email to:

AEMVideo@alamo-group.com

To the Owner/Operator/Dealer

This Operator's Manual is an integral part of the safe operation of this machine and must be maintained with the implement at all times. A Manual canister is provided on the implement where this manual can be properly stored. If you lose or damage this manual a free replacement manual can be obtained from an authorized Bush Hog dealer or by down loading the manual from the Bush Hog website www.bushhog.com

BEFORE YOU START!! READ, UNDERSTAND, and FOLLOW the information provided in this manual, the AEM Mower Safety manual and the tractor operator's manual carefully to learn how to operate and service your machine properly. Failure to do so could result in personal injury to you and bystanders. All implements with moving parts are potentially hazardous. Every effort has been made to ensure that the machine is safe but operators must avoid engaging in unsafe practices and follow the written instructions provided. The manufacturer has designed this implement to be used with all its safety equipment properly attached to minimize the chance of accidents.

SAFETY FIRST. Completely read and understand the safety section of this manual before operating this equipment. Do not allow anyone to operate this equipment who has not fully read and understood this manual. Contact your Dealer to explain any instructions that you do not fully understand.

The care you give your Bush Hog Implement will greatly determine your satisfaction with its performance and its service life. Carefully read and follow the instructions in this manual to provide you with a thorough understanding of your new implement and its intended use and service requirements.

All references made in this manual to right, left, front, rear, top or bottom are as viewed facing the direction of forward travel with the implement properly attached to the tractor.

Replacement Parts information is located in a separate Parts Manual. Bush Hog mowers use balanced and matched system components for blade carriers, blades, cuttershafts, knives, knife hangers, rollers, drivetrain components, and bearings. These parts are made and tested to Bush Hog specifications. Non-genuine "will fit" parts do not consistently meet these specifications. The use of "will fit" parts may reduce mower performance, void warranties, and present a safety hazard. Use genuine Bush Hog mower parts for economy and safety.

For future reference, record your Bush Hog product model number and serial number.

Dealer		Telephone		Model Number	
Owner		Purchase Date:		Serial Number	

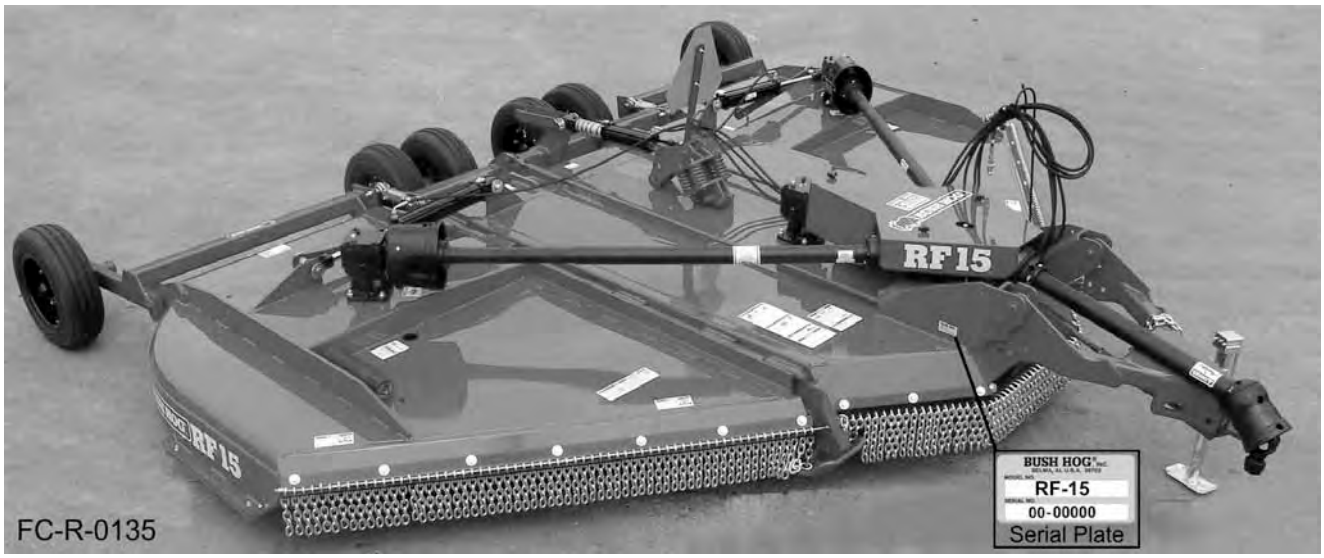

DEALER to CUSTOMER Pre-Delivery/ Operation Instructions

Dealer should inform the Purchaser of this product of Warranty terms, provisions, and procedures that are applicable.Dealer should inform Purchaser to review the contents of the Operator's Manual including safety equipment, safe operation, and maintenance, to review the Safety Signs on the implement (and tractor if possible), and of Purchaser's responsibility to train his/her operators's in safe operation procedures.

IMPLEMENTS: I have explained that Deflectors, Chain Guards, or Solid Skirts must be installed and maintained in good repair.

- **DRIVELINES:** I have made certain that all driveline, gearbox, and other shields are in good repair and fastened securely in place to prevent injuries from entanglement or thrown objects.

- **HYDRAULIC MACHINES:** I have explained the necessity of using clean hydraulic oil, changing filters as instructed, stopping leaks, damage caused by operating with over-heated oil, caring for hoses, using hoses of proper rating, maintaining the specified operating pressure and the potential hazard of oil's penetrating the skin.

- **FOLDING-TYPE IMPLEMENTS:** I have explained that it is not possible to guard against thrown objects when the head is lifted off ground and that operator is responsible to watch out for persons in the area. I have explained that the lifted mower head or boom can contact overhead obstructions with damage to cables and telephone lines and possible injury. I have explained that the extended head or boom or retracted boom can contact power lines with resulting electrocution, injury or death and that operator is responsible for keeping clear of such hazards.

PRE-DELIVERY SERVICE
CHECK AND ADJUST OR LUBRICATE AS REQUIRED
See Operator's Manual for Details
Inspection Performed - Warranty and Safety Procedures Explained - Installation Complete

LUBRICATION & HYDRAULICS

- ☐ Gearbox (Oil Levels)
- ☐ Hydraulic Oil Level (External Tank)
- ☐ Tractor Hydraulic Oil Level
- ☐ Hydraulic Hoses (Not Kinked Tighten Connections)
- ☐ Front Pump Drive (Assembly Is Tight And Shaft Properly Aligned)

MOWER

- ☐ Spindle And Motor Bolts Properly Torqued
- ☐ Spindle Oil Level
- ☐ Blade Carrier Bolts Properly Torqued/Retaining Pin In Place
- ☐ Mower Cutting Height And Level Adjusted
- ☐ Cutting Shaft Bearings Lubricated
- ☐ All Hardware Properly Torqued
- ☐ Tire and Air Pressure/Lug Nuts (Correct Torque)
- ☐ Wheel Bearings (Check, Grease, and Preload)

ATTACHMENTS & INSTALLATION

- ☐ Deflectors Front And Rear
- ☐ Shredding Attachments
- ☐ Correct Blade Rotation Direction
- ☐ Axle Arms And Beams
- ☐ Tongue And Control Rods (Installed And Adjusted)
- ☐ All Bolts - Pins And Nuts (Proper Torque)

MOWER TO TRACTOR CONNECTIONS

- ☐ Draw Bar Length (Check And Set)
- ☐ A-Frame Pivot & Links
- ☐ Control Rods (Adjusted Equal)
- ☐ Axle Height (Adjusted)
- ☐ Cutting Height (Adjust)
- ☐ Mount Kit-Pre-Operation Check Complete
- ☐ Mower Wing (Adjust Level With The Center)
- ☐ Mower Wing (Check For Proper Raising Operation)
- ☐ C.V. Driveline (Check Max Turn Radius)
- ☐ Pull Type Hitch (Height Adjustment)
- ☐ Mounting Hardware Properly Torqued

SAFETY ITEMS

- ☐ Protective Shields (Operation And Installation)
- ☐ Driveline Clutch (Torque Limiter) (Adjust And Run In)
- ☐ Safety Decals (Installed)
- ☐ Operator's Manual (Supplied)
- ☐ Tractor PTO Shield (Installed)
- ☐ S.M.V. Emblem (Installed If Needed)
- ☐ Tongue Jack (Installation and Operation)
- ☐ Safety Tow Chain (Installed)
- ☐ ADMA Driveline Safety Manual Supplied
- ☐ AEM Mower Safety Manual (Supplied in Canister)
- ☐ AEM Mower Safety Video has been shown to Purchaser

Table of Contents

SAFETY SECTION 1-1

GENERAL SAFETY INSTRUCTIONS AND PRACTICES 1-2
OPERATOR SAFETY 1-3
CRUSHING HAZARDS 1-4
CONNECTING OR DISCONNECTING IMPLEMENT SAFETY 1-5
THROWN OBJECTS HAZARDS 1-6
RUN OVER HAZARDS 1-8
PTO ENTANGLEMENT HAZARDS 1-9
MOWER BLADE CONTACT HAZARDS 1-10
HIGH PRESSURE OIL LEAK HAZARD 1-10
ELECTRICAL & FIRE HAZARDS 1-11
TRANSPORTING HAZARDS 1-12
HAZARDS WITH MAINTENANCE OF IMPLEMENT 1-13
PARTS INFORMATION 1-14
Decal Location 1-15
Decal Description 1-17
Federal Laws and Regulations 1-26

INTRODUCTION SECTION 2-1

Equipment Specifications 2-3
KEY OPERATION POINTS 2-4
Operating Noise Level/Sound Pressure 2-4

ASSEMBLY SECTION 3-1

DEALER SET-UP INSTRUCTIONS 3-2
ASSEMBLY 3-3
CONNECTING DRIVELINE 3-4
DRIVELINE ATTACHMENT 3-5
TIRES AND WHEELS 3-7

OPERATION SECTION 4-1

OPERATOR REQUIREMENTS 4-3
TRACTOR REQUIREMENTS 4-4
ROPS and Seat Belt 4-4
Tractor Safety Devices 4-4
Tractor Horsepower 4-5
Front End Weight 4-5
Drawbar 4-5
Power Take Off (PTO) 4-5
Tire Spacing 4-6
GETTING ON AND OFF THE TRACTOR 4-6
Boarding the Tractor 4-6
Dismounting the Tractor 4-7
STARTING THE TRACTOR 4-7
CONNECTING THE MOWER TO THE TRACTOR 4-8
Connecting the Mower Tongue to the Tractor 4-9
Safety Tow Chain 4-9
Connecting Mower Hydraulic Lines to the Tractor 4-10

SETTING THE MOWER 4-10
Setting Deck Height 4-11
Setting Deck Pitch 4-12
DRIVELINE ATTACHMENT 4-13
Driveline Length Check 4-13
PRE-OPERATION INSPECTION AND SERVICE 4-14
Tractor Pre-Operation Inspection/Service 4-16
Mower Pre-Operation Inspection/Service 4-16
Cutting Component Inspection 4-20
Blade Bolt Inspection 4-22
DRIVING THE TRACTOR AND IMPLEMENT 4-25
Starting the Tractor 4-26
Brake and Differential Lock Setting 4-26
Operating the Mower Wings 4-26
Transport Position 4-27
Operating Position 4-27
Driving the Tractor and Cutter 4-28
Crossing Ditches and Steep Inclines 4-29
OPERATING THE TRACTOR AND IMPLEMENT 4-30
Foreign Debris Hazards 4-31
Bystanders/Passersby Precautions 4-31
Engaging the Power Take Off (PTO) 4-32
PTO RPM and Ground Speed 4-33
Operating the Mower 4-33
Right of Way (Highway) Mowing 4-36
Shutting Down the Implement 4-37
DISCONNECTING THE MOWER FROM THE TRACTOR 4-37
MOWER STORAGE 4-39
TRANSPORTING THE TRACTOR AND IMPLEMENT 4-39
Tire and Wheels 4-41
Transporting on Public Roadways 4-42
Hauling the Tractor and Implement 4-43
TROUBLESHOOTING GUIDE 4-44

MAINTENANCE SECTION 5-1

HAZARDS WITH MAINTENANCE OF IMPLEMENT 5-2
PARTS INFORMATION 5-3
Lubrication 5-3
WING GEARBOX 5-5
DIVIDER GEARBOX 5-5
DRIVELINES 5-6
BLADE SERVICING 5-9
BLADE SHARPENING 5-10
BLADE REMOVAL 5-11
Blade Bolt Inspection 5-11
BLADE CARRIER REMOVAL 5-12
SLIP CLUTCHES 5-14
WHEEL HUB ASSEMBLY 5-14
Tongue 5-15
HIGH PRESSURE OIL LEAK HAZARD 5-16
HYDRAULIC HOSES 5-16
Flex Wing Hydraulic Cylinder Replacement Instructions 5-17
STORAGE 5-18
PROPER TORQUE FOR FASTENERS 5-18
REMOVE MAIN INPUT SHAFT 5-22

REMOVE SIDE OUTPUT SHAFTS 5-22
ASSEMBLY PROCEDURE 5-22
SIDE OUTPUT SHAFTS 5-23
MAIN INPUT SHAFT 5-23
GEARBOX SERVICING 5-25
Disassembly 5-26
Assembly 5-28

SAFETY SECTION

© 2012 Alamo Group Inc.

SAFETY

GENERAL SAFETY INSTRUCTIONS AND PRACTICES

A careful operator is the best operator. Safety is of primary importance to the manufacturer and should be to the owner/operator. Most accidents can be avoided by being aware of your equipment, your surroundings, and observing certain precautions. The first section of this manual includes a list of Safety Messages that, if followed, will help protect the operator and bystanders from injury or death. Read and understand these Safety Messages before assembling, operating or servicing this Implement. This equipment should only be operated by those persons who have read the manual, who are responsible and trained, and who know how to do so responsibly.

The Safety Alert Symbol combined with a Signal Word, as seen below, is used throughout this manual and on decals which are attached to the equipment. The Safety Alert Symbol means: “ATTENTION! BECOME ALERT! YOUR SAFETY IS INVOLVED!” The Symbol and Signal Word are intended to warn the owner/operator of impending hazards and the degree of possible injury faced when operating this equipment.

Practice all usual and customary safe working precautions and above all---remember safety is up to <u>YOU</u>. Only <u>YOU</u> can prevent serious injury or death from unsafe practices.

⚠ DANGER Indicates an imminently hazardous situation that, if not avoided, WILL result in DEATH OR VERY SERIOUS INJURY.

⚠WARNING Indicates an imminently hazardous situation that, if not avoided, COULD result in DEATH OR SERIOUS INJURY.

⚠ CAUTION Indicates an imminently hazardous situation that, if not avoided, MAY result in MINOR INJURY.

Important Identifies special instructions or procedures that, if not strictly observed, could result in damage to, or destruction of the machine, attachments or the environment.

NOTE: *Identifies points of particular interest for more efficient and convenient operation or repair.*

READ, UNDERSTAND, and FOLLOW the following Safety Messages. Serious injury or death may occur unless care is taken to follow the warnings and instructions stated in this Manual and in the Safety Messages on the implement. Always follow the instruction in this manual and use good common sense to avoid hazards.

NOTE: *If you want a translation of this safety section in one of the following Languages, please contact: Translations at 1502 E. Walnut Street Seguin, TX 78155; Fax: (830) 372-9529; Safety Section Translations are available in Spanish, Portuguese, French, German, Russian.* ***PN GS01***

© 2012 Alamo Group Inc.

SAFETY

OPERATOR SAFETY

		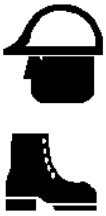		
Read and understand Operator's Manual	Always wear Safety Glasses	Wear Hard Hat Safety Shoes	Never use Drugs or Alcohol when operating equipment	Wear Safety Vest when operating on or near roads

⚠WARNING **TO AVOID SERIOUS INJURY OR DEATH DO THE FOLLOWING:**

- **READ, UNDERSTAND** *and* **FOLLOW** *Operator's Manual instructions, Warnings and Safety Messages.*
- **WEAR SAFETY GLASSES***, safety shoes, hard hat, hearing protection and gloves when operating or repairing equipment*
- **WEAR** *appropriate breathing respirator when operating in dusty conditions to avoid respiratory diseases.*
- **DO NOT WEAR** *loose clothing or jewelry to avoid rotating parts entanglement injury.*
- **DO NOT USE DRUGS** *or* **ALCOHOL** *before or while operating equipment.*
- **DO NOT ALLOW** *anyone to operate equipment under the influence of drug or alcohol.*
- **CONSULT** *medical professional for medication impairment side effects.*
- **STAY ALERT***, prolonged operation can cause fatigue,* **STOP** *and* **REST***.*

GENERAL OPERATING SAFETY

VISIBILITY CONDITIONS WHEN MOWING:

- **OPERATE IN DAYLIGHT** *or with lights that gives at least 100 yards clear visibility.*
- **BE ABLE TO SEE** *and identify passersby, steep slopes, ditches, drop-offs, overhead obstructions, power lines, debris and foreign objects.*

GROUND SPEED WHEN MOWING:

- **NORMAL SPEED** *range is between 2 to 5mph.*
- **ADJUST MOWING SPEED** *for terrain conditions and grass type, density and cut height.*
- **REDUCE MOWING SPEED** *when near steep slopes, ditches, drop-offs, overhead obstructions, power lines and to avoid debris and foreign objects.*

INSECT INFESTATION

- *Do Not operate in areas where bees or insects may attack unless you* **WEAR PROTECTIVE CLOTHING** *or use enclosed tractor cab.*

PTO SPEED:

- **DO NOT EXCEED IMPLEMENT RATED PTO SPEED**
- **AVOID** *exceeding rated PTO speeds that may result in broken drivelines or blade failures.*

SAFETY SIGNS:

- **REPLACE** *missing, damaged or unreadable safety signs immediately.* ***PN OS01***

© 2012 Alamo Group Inc.

SAFETY

CRUSHING HAZARDS

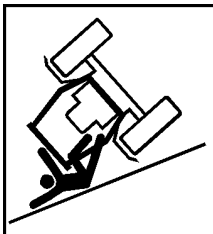	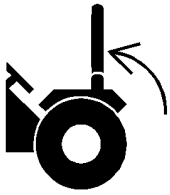		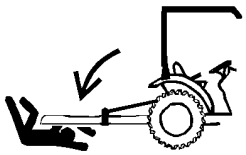	
Crushing injury from roll over	Lock ROPS in up position	Always wear seatbelt	Crushing injury implement falling	Crushing injury wing falling

⚠ DANGER **TO AVOID SERIOUS INJURY OR DEATH FROM FALLING OFF TRACTOR, EQUIPMENT RUN OVER, ROLLOVER AND CRUSHING BY FALLING WING OR IMPLEMENT:**

- **USE ROPS** *and* **SEAT BELT** *equipped tractors for mowing operations.*
- **KEEP ROPS** *lock in up position.*
- **ALWAYS BUCKLE UP** *seat belt when operating tractor and equipment.*
- **ONLY OPERATE** *tractor and equipment while seated in tractor seat.*

WHEN RAISING OR LOWERING WINGS:

- *Raise or lower* **ONLY WHILE SEATED** *in tractor seat with seat belt buckled.*
- *Raise or lower* **ONLY** *when implement tongue is securely attached to tractor drawbar TO AVOID implement tip over.*
- **KEEP BYSTANDERS CLEAR** *of area* **TO AVOID** *crushing.*
- **KEEP** *sufficient clearance around implement and wings* **TO AVOID** *contacting buildings or overhead power lines.*

LIFTED Equipment can fall from mechanical or hydraulic failure or inadvertent Control Lever movement.

⚠ WARNING **TO AVOID EQUIPMENT FALLING while working near or under lifted wings, components and implements raised by 3-Pointed tractor hitch:**

- **SECURELY SUPPORT or block up raised equipment, wings and components.**
- **BLOCK UP and securely support equipment before putting hands, feet or body under raised equipment or lifted components.**
- **KEEP BYSTANDERS CLEAR of folded wings until wings are blocked or locked up.**

WHEN PARKING Implement and Tractor:

- **LOWER** implement, **LOCK** or **BLOCK** lifted parts before leaving equipment.
- **NEVER** leave implement unattended in a raised position.

⚠ WARNING **TO AVOID CHILDREN FALLING OFF OR BEING CRUSHED BY EQUIPMENT:**

- **NEVER ALLOW** children to play on or around Tractor or Implement.

WHEN UNHITCHING IMPLEMENT:

- **LOWER** *implement,* **LOCK** *or* **BLOCK** *lifted parts before leaving equipment.*
- **USE** *tongue jack to control implement tongue movement.*
- **USE** *tongue* **JACK** *to lift heavy implement tongues.*
- **AVOID** *overloading jack to prevent jack failure and injury.****(Refer to Instructions in Operation Section)***

BEFORE REMOVING Wing Retaining Lock:

- **ATTACH** *hoses to tractor.*
- **FILL** *Wing Cylinders with oil.* ***(Refer to Instructions in Operation Section)***
- **KEEP** *bystanders away before operating wings.*
- **LOWER WINGS** *slowly and carefully.* ***PN CH01***

© 2012 Alamo Group Inc.

CONNECTING OR DISCONNECTING IMPLEMENT SAFETY

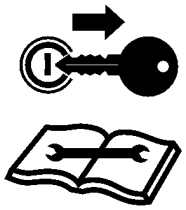	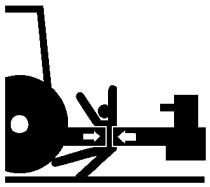		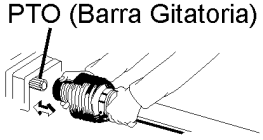	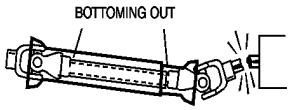
Stop Tractor Remove Key Read Manual	Crushing injury between tractor and implement	Crushing injury wing falling	Make sure PTO shaft is securely attached to tractor	Make sure PTO shaft are proper length

⚠ DANGER **TO AVOID SERIOUS INJURY OR DEATH FROM BEING CRUSHED BY TRACTOR OR IMPLEMENT:**

WHEN BACKING tractor to implement hitch:

- **DO NOT ALLOW BYSTANDERS** *between tractor and implement.*

BEFORE ***connecting and disconnecting implement hitch:***

- **STOP TRACTOR ENGINE**, *place transmission into park, engage parking brake and remove key.*

WHEN ***connecting and disconnecting implement hitch:***

- *DO NOT crawl or walk under raised mower or wing.*
- *USE tongue JACK to lift heavy implement tongues to control implement tongue movement.*
- *AVOID overloading jack to prevent jack failure and injury.* ***(Refer to Instructions in Operation Section)***

WHEN CONNECTING IMPLEMENT DRIVELINE:

TO AVOID ***implement driveline coming loose during operation:***

- **LUBRICATE** *yoke spring locking collar to ensure it freely slides on PTO shaft.*
- **SECURELY** *seat yoke locking balls in PTO shaft groove.*
- **PUSH** *and* **PULL DRIVELINE** *on both the tractor and implement* **PTO SHAFTS** *to ensure it is* **SECURELY ATTACHED.**

TO AVOID ***broken driveline during operations:***

- **CHECK** *driveline for proper length between PTO shaft and implement gearbox shaft.****(Refer to Instructions in Operation Section)***
- *Drivelines too short can pull apart or disengage.*
- *Drivelines too long can bottom out.*
- *Bottoming driveline telescoping assembly will stop sliding and become solid.*
- *Driveline bottoming can push through support bearings and break off PTO shaft.*

CONTACT DEALER ***if implement driveline does not match Tractor PTO shaft:***

- **DO NOT USE PTO ADAPTER.**
  Using a PTO adapter can cause:
- *Excessive vibration, thrown objects, blade and implement failures by doubling operating speed.*
- *Increased working length exposing unshielded driveline areas and entanglement hazards.*

BEFORE REMOVING WING RETAINING LOCKS:

- **ATTACH** *hoses to tractor.*
- **FILL** *Wing Cylinders with oil.* ***(Refer to Instructions in Operation Section)***
- **KEEP** *bystanders clear of area before operating wings.*
- **LOWER WINGS** *slowly and carefully.*

DO NOT connect the Mower to a tractor with the PTO directly connected to the Tractor transmission. ***PN CD01***

© 2012 Alamo Group Inc.

THROWN OBJECTS HAZARDS

	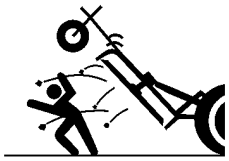			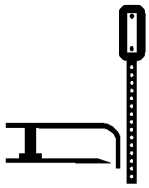
Mower Thrown Objects Hazard	Raised Mower Thrown Objects	Raised Mower Thrown Objects	Inspect Area remove foreign objects	Do not let blades contact solid objects

⚠ DANGER **ROTARY MOWERS CAN THROW OBJECTS 300 FEET OR MORE UNDER ADVERSE CONDITIONS.**

TO AVOID SERIOUS INJURY OR DEATH TO OPERATOR OR BYSTANDERS FROM THROWN OBJECTS:

- *KEEP bystanders 300 feet away*

STOP MOWING IF PASSERSBY ARE WITHIN 300 FEET UNLESS:

- **All THROWN OBJECT SHIELDING** *including, Front and Rear Deflectors, Chains Guards, Steel Guards, Bands, Side Skirts and Skid Shoes in place and in good condition when mowing.*
- *Mower sections or wing are adjusted to be close and parallel to ground without exposing blades.*
- **MOWING AREA** *has been inspected and foreign materials and debris have been removed.*
- **PASSERSBY** *are inside enclosed vehicle.*

INSPECT AREA FOR POTENTIAL THROWN OBJECTS BEFORE MOWING:

- **REMOVE** debris, rocks, wire, cable, metal objects and other foreign material from area.
  Wire, cable, rope, chains and metal objects can be thrown or swing outside deck with great velocity**:**
  1. **MARK** objects that cannot removed.
  2. **AVOID** these objects when mowing.

HIGH GRASS and WEED AREA INSPECTION:

- **INSPECT** for and **REMOVE** any hidden large debris.
- **MOW** at Intermediate height
- **INSPECT** and remove remaining debris
- **MOW** at final height.

MOWER THROWN OBJECT SHIELDING:

- **KEEP** *all thrown object shielding including, Front and Rear Deflectors, Chains Guards, Steel Guards, Bands, Side Skirts and Skid Shoes in place and in good condition when mowing.*
- **DO NOT OPERATE** *with any thrown object shielding missing, damaged or removed.*

RIGHT OF WAY (Highway) MOWING

- **USE DOUBLE CHAIN GUARDS** *for highway, right-of-way, parks or greenbelt mowing or all other mowing where human dwellings, vehicles, or livestock could be within 300 feet of the mower.*
- *No shielding is 100% effective in preventing thrown objects. To Reduce Possibility of Injury:*
  1. **MAINTAIN MOWER SHIELDING**, side skirts, skid shoes, and blades in good operational condition,
  2. **RAISE CUTTING HEIGHT** to **6 INCHES** minimum,
  3. **INSPECT AREA** thoroughly before mowing to **REMOVE** potential **THROWN OBJECT HAZARDS**,
  4. **NEVER ALLOW BLADES to CONTACT SOLID OBJECTS** like wire, rocks, post, curbs, guardrails, or ground while mowing. ***PN TO01***

© 2012 Alamo Group Inc.

THROWN OBJECTS HAZARD (CONTINUED)

	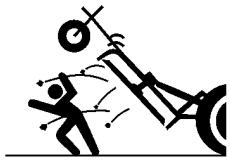			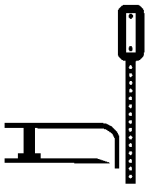
Mower Thrown Objects Hazard	Raised Mower Thrown Objects	Raised Mower Thrown Objects	Inspect Area remove foreign objects	Do not let blades contact solid objects

MOWER OPERATION:

- **DO NOT** *exceed mower's rated Cutting Capacity or cut non-vegetative material.*
- **USE ENCLOSED TRACTOR CABS** *when two or more mowers are operating in mowing area.*
- *Do Not mow in areas where bees or insects may attack unless you* **WEAR PROTECTIVE CLOTHING** *or use enclosed tractor cab.*
- **ADJUST** *mower sections or wing close and parallel to ground without exposing blades.*
- **ADJUST** *cutting* **HEIGHT** *to* **AVOID BLADE CONTACT** *with solid objects like wire, rocks, posts, curbs, guard rails and fixed obstructions.*
- **DO NOT** *operate mower when mower wing(s) is raised or in transport position.*
- **STOP MOWING** *immediately if blades strike heavy objects, fixed structures, metal guard rails and concrete structures:*
  1. **BLADES CAN FAIL** *from impact and objects can be thrown with great velocity.*
  2. **INSPECT** *and* **REPLACE** *any damaged blades.*
  3. **CHECK** *blade carrier and* **REPLACE** *if damaged.*
- **DO NOT** *mow in standing water* **TO AVOID** *possible* **BLADE FAILURE***.*
- **AVOID MOWING** *in reverse:*
  1. **STOP PTO** *and back up mower.*
  2. **LOWER** *mower, engage* **PTO** *and mow forward.*
- **STOP PTO** *and* **BLADES** *when raising wings or the mower to transport position.*
- **DO NOT ENGAGE PTO** *with mower in transport position.*
- **STOP** *mowing when* **EXCESSIVE VIBRATION** *occurs:*
  1. **STOP PTO** *and tractor* **ENGINE.**
  2. **INSPECT** *mower for vibration source.*
  3. **REPLACE** *any damage parts and bent or damaged* **BLADES***.* ***PN TO01-X***

© 2012 Alamo Group Inc.

RUN OVER HAZARDS

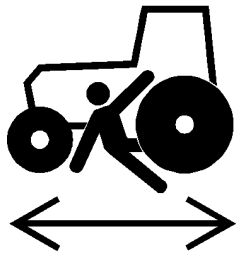		
Operator run over hazard	Rider fall off run over hazard	Rider fall off run over hazard

DANGER **TO AVOID SERIOUS INJURY OR DEATH FROM FALLING OFF TRACTOR OR EQUIPMENT RUN OVER:**

- **USE ROPS** *and* **SEAT BELT** *equipped tractors for mowing operations.*
- **KEEP ROPS** *locked in* **UP** *position.*
- **ONLY** *start tractor while seated in tractor seat.*
- **ALWAYS BUCKLE UP** *seat belt when operating tractor and equipment.*
- **ONLY OPERATE** *tractor and equipment while seated in tractor seat.*
- **NEVER ALLOW RIDERS** *on tractor or implement.*

WHEN MOUNTING AND DISMOUNTING TRACTOR:

- **ONLY mount or dismount when tractor and moving parts are stopped.**
- **STOP ENGINE AND PTO, engage parking brake, lower implement, allow all moving parts to stop and remove key before dismounting from tractor.** ***PN RO01***

© 2012 Alamo Group Inc.

PTO ENTANGLEMENT HAZARDS

		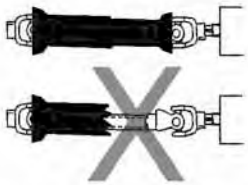	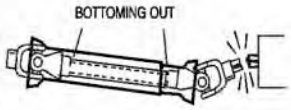
Entanglement hazard Do Not approach or touch a rotating PTO driveshaft	Make sure PTO shaft is securely attached Do Not Use PTO Adapter	DO NOT Operate if PTO shields are damaged or missing	Make sure PTO shafts are proper length

⚠ DANGER **KEEP AWAY FROM ROTATING DRIVELINES AND ELEMENTS TO AVOID SERIOUS INJURY OR DEATH:**

STAY AWAY *and* **KEEP** *hands, feet and body AWAY from rotating blades, drivelines and parts until all moving elements have stopped.*

- **STOP, LOOK** *and* **LISTEN** *before approaching the mower to make sure all rotating motion has stopped.*
- **ROTATING COMPONENTS CONTINUE** *to* **ROTATE** *after the PTO is shut off.*

PTO SHIELDING:

TO AVOID SERIOUS INJURY OR DEATH FROM ENTANGLEMENT WHEN OPERATING IMPLEMENT:

- **KEEP PTO** shields, integral driveline shields and input shields installed
- **DO NOT OPERATE** mower without shields and guards in place or missing
- **REPAIR OR REPLACE** if damage, broken or missing
- **ALWAYS REPLACE GUARDS** that have been removed for service or maintenance.
- Do Not use PTO or PTO guard as a step.

TO AVOID broken driveline during operations:

- **CHECK** driveline for proper length between PTO shaft and implement gearbox shaft.***(Refer to Instructions in Operation Section)***
- Drivelines too short can pull apart or disengage.
- Drivelines too long can bottom out.

  Bottoming driveline telescoping assembly will stop sliding and become solid.
- Driveline bottoming can push through support bearings and break off PTO shaft
- **AVOID** sharp turns or lift mower to heights to cause driveline "knocking".
- Lubricate driveshaft-telescoping components weekly.

CONTACT DEALER if implement driveline does not match Tractor PTO shaft:

- **DO NOT USE PTO ADAPTER.**

  Using a PTO adapter can cause excessive vibration, thrown objects, blade and implement failures by doubling operating speed. Increased working length exposing unshielded driveline areas. ***PN PE01***

© 2012 Alamo Group Inc.

SAFETY

MOWER BLADE CONTACT HAZARDS

		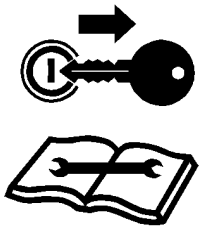
Do not put fingers underneath mower	Do not put foot underneath mower	Stop Tractor Remove Key Read Manual

⚠ DANGER **KEEP AWAY FROM ROTATING BLADES TO AVOID SERIOUS INJURY OR DEATH FROM BLADE CONTACT:**

- **STAY AWAY** *and* **KEEP HANDS, FEET** *and* **BODY AWAY** *from rotating blades, drivelines and parts until all moving elements have stopped.*
- **DO NOT** *put hands or feet under mower decks*
- **STOP** *rotating* **BLADES** *disengage PTO and wait for blade to stop rotating before raising mower deck or wings*
- **STOP LOOK** *and* **LISTEN** *before approaching the mower to make sure all rotating motion has stopped.* ***PN MB01***

HIGH PRESSURE OIL LEAK HAZARD

High pressure oil penetrating skin	High pressure oil eroding skin	Using cardboard to check for oil leaks

⚠ DANGER **TO AVOID SERIOUS INJURY OR DEATH FROM HIGH PRESSURE HYDRAULIC OIL LEAKS PENERATING SKIN:**

- **DO NOT OPERATE** *equipment with oil or fuel leaks.*
- **KEEP** *all hydraulic hoses, lines and connections in* **GOOD CONDITION** *and* **TIGHT** *before applying system pressure.*
- **RELIEVE HYDRAULIC PRESSURE** *before disconnecting lines or working on the system.*
- **REMOVE** *and replace hose if you suspect it leaks. Have dealer test it for leaks.*

HIGH PRESSURE FLUID LEAKS CAN BE INVISIBLE.

WHEN CHECKING FOR HYDRAULIC LEAKS AND WORKING AROUND HYDRAULIC SYSTEMS:

- **ALWAYS WEAR** *safety glasses and impenetrable gloves.*
- **USE** *paper or cardboard to search for leaks.*
- **DO NOT USE** *hands or body parts to search for leak.*
- **KEEP** *hands and body* **AWAY** *from pin holes and nozzles ejecting hydraulic fluid.*
- *Hydraulic fluid may cause gangrene if not surgically removed immediately by a doctor familiar with this form of injury.* ***PN HP01***

© 2012 Alamo Group Inc.

ELECTRICAL & FIRE HAZARDS

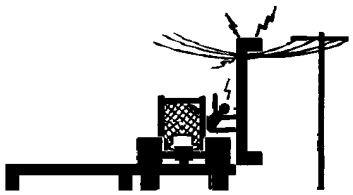	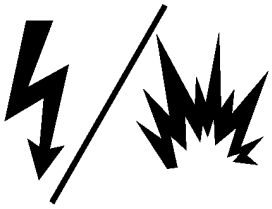	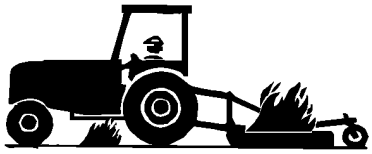
Wing contacting overhead electrical lines	Strike and explosion Hazard Blades Contacting Utility or Gas Lines	Do not operate near fires. Keep mower deck clear of debris

⚠ DANGER **TO AVOID SERIOUS INJURY OR DEATH FROM ELECTRICAL CONTACT WHEN WORKING AROUND ELECTRICAL POWER LINES, GAS LINES AND UTILITY LINES:**

- **INSPECT** *mowing area for overhead or underground electrical power lines, obstructions, gas lines, cables and Utility, Municipal, or other type structure.*
- **KEEP** *all raised wings at a 10 feet or greater distance from all power lines and overhead obstructions.*
- **DO NOT** *allow mower to contact with any Utility, Municipal, or type of structures and obstructions.*
- **CALL 811** *and 1-800-258-0808 for identify buried utility lines.*

FIRE PREVENTION GUIDELINES while Operating, Servicing, and Repairing Mower and Tractor to reduce equipment and grass fire Risk:

- **EQUIP** *Tractor with a* **FIRE EXTINGUISHER**
- **DO NOT OPERATE** *mower on a tractor equipped with under frame exhaust*
- **DO NOT SMOKE** *or have open flame near Mower or Tractor*
- **DO NOT DRIVE** *into burning debris or freshly burnt area*
- **AVOID FIRE IGNITION** *by not allowing mower blade to contact solid objects like metal or rock.*
- **ADJUST SLIP CLUTCHES** *to avoid excessive slippage and clutch plate heating.*
- **CLEAR** *any grass clippings or debris buildup around mower drivelines, slip clutches, and gearboxes.*
- **SHUT OFF ENGINE** *while refueling.* ***PN EF01***

© 2012 Alamo Group Inc.

SAFETY

TRANSPORTING HAZARDS

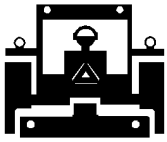			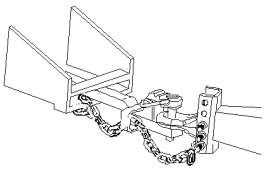	
Use SMV signs and Flashing Lights	Loss of Control Stopping Hazard	Loss of Control Speeding Hazard	Use Safety Tow Chain - Tractor to Implement	Engage Transport Locks

⚠WARNING **TO AVOID SERIOUS INJURY AND DEATH WHEN TOWING OR TRANSPORTING EQUIPMENT:**

- **KEEP** *transport speed* **BELOW** *20 mph to maintain control of equipment.*
- **REDUCE SPEED** *on inclines, on turns and in poor towing conditions.*
- **DO NOT TOW** *with trucks or other vehicles.*
- **USE** *only properly sized and equipped tractor for towing equipment.*
- **FOLLOW** *all local traffic regulations.*

TRACTOR REQUIREMENTS FOR TOWING OR TRANSPORTING IMPLEMENTS:

- **ONLY TRANSPORT** *with tractor with* **ROPS** *in the raised position.*
- **USE** *properly sized and equipped tractor that exceeds implement weight by at least 20%.*
- **KEEP** *20% of tractor weight on front wheels to maintain safe steering.*

BEFORE TRANSPORTING OR TOWING IMPLEMENT:

TRACTOR INSPECTION:

- **CHECK** steering and braking for proper operation and in good condition.
- **CHECK SMV** sign, reflectors and warning lights for proper operation and visibility behind unit.
- **CHECK** that your driving vision is not impaired by tractor, cab, or implement while seated in tractor seat.
- **ADJUST** your operating position, mirrors, and implement transport for clear vision for traveling and traffic conditions.

PREPARE IMPLEMENT FOR TRANSPORTING OR TOWING:

ENGAGE TRANSPORT LOCKS AND SAFETY CHAINS:

- **RAISE MOWER** and **ENGAGE** center axle cylinder transport stops or pins.
- **RAISE WINGS** and **ENGAGE TRANSPORT LOCKS** or pins.
- **ATTACH** implement **SAFETY CHAIN** to tractor.
- **REMOVE** any cut material collected on mower deck.

DETERMINE STOPPING CHARACTERISTICS OF TRACTOR AND IMPLEMENT FOR TRANSPORTING OR TOWING:

BRAKING TESTS:

- **INSTALL** center axle cylinder transport stops or pins.
- Observe **STOPPING** distances increases with increased speeds.
- **DETERMINE** the maximum safe transport speed that does not exceed 20 mph.

DETERMINE MAXIMUM TURING SPEED BEFORE OPERATING ON ROADS OR UNEVEN GROUND:

- **TEST** equipment in slowly increasing speed in turns to determine it can be operated at higher speeds.
- **USE REDUCED** turning speeds in sharp turns to avoid equipment turning over.

WHEN TOWING OR TRANSPORTING EQUIPMENT:

- Always **WEAR SEAT BELT** when operating or transporting mower.
- **USE** low speeds to avoid overturn with raised wings.
- **USE** low speeds and gradual steering on curves, hills, rough or uneven surfaces and on wet roads.
- **TURN ON** tractor **FLASHING WARNING LIGHTS**.
- **ALLOW** clearance for implement swing while turning.

KEEP all raised wings at 10 feet or greater distance from all power lines and overhead obstructions. ***PN TH01***

© 2012 Alamo Group Inc.

HAZARDS WITH MAINTENANCE OF IMPLEMENT

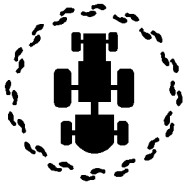	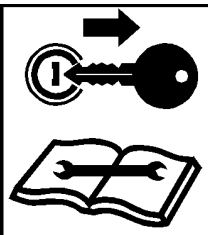	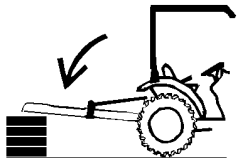	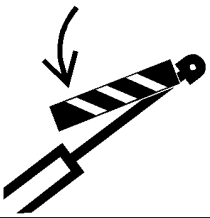	
Periodically inspect all moving parts, lubricate drivelines, and tighten all fasteners	Stop engine remove key before conducting maintenance	Block up implement before servicing Use large blocks on soft or wet soil	Engage cylinder transport locks	Inspect Blades for damage or cracks

⚠WARNING **AVOID SERIOUS INJURY OR DEATH FROM COMPONENT FAILURE BY KEEPING IMPLEMENT IN GOOD OPERATING CONDITION IN PERFORMING PROPER SERVICE, REPAIRS AND MAINTENANCE.**

BEFORE PERFORMING SERVICE, REPAIRS AND MAINTENANCE ON THE IMPLEMENT:
SECURE EQUIPMENT FOR SERVICE
BLOCK OUT POTENTIAL ENERGY HAZARDS; Rotating Parts, Raised Components, Hydraulic Pressure.

- **STOP ENGINE AND PTO**, engage parking brake, lower implement, allow all moving parts to stop and remove key before dismounting from tractor.
- **PLACE** implement on ground or securely block up raised equipment. Use large blocks on soft or wet soil.
- **SECURELY LATCH** and **LOCK** raised implement wings
- **BLOCK UP IMPLEMENT TONGUE** with large blocks and tongue jack. **DO NOT** crawl or work under implement supported only by tongue jack.
- **PUSH** and **PULL** Remote Hydraulic Cylinder lever to relieve hydraulic pressure.
- **DISCONNECT IMPLEMENT** Hydraulic **HOSES** from tractor
- **DISCONNECT IMPLEMENT** driveline from tractor **PTO SHAFT**.

WEAR SAFETY GLASSES, PROTECTIVE GLOVES and follow **SAFETY PROCEDURES** when performing service, repairs and maintenance on the implement:

- Always **WEAR** protective **GLOVES** when handling blades, knives, cutting edges or worn component with sharp edges.
- Always **WEAR GLOVES** and **SAFETY GLASSES** when servicing hot components
- **AVOID CONTACT** with hot hydraulic oil tanks, pumps, motors, valves and hose connection surfaces.
- **SECURELY** support or **BLOCK UP** raised implement, framework and lifted components before working underneath equipment.
- **STOP** any implement movements and **SHUT-OFF TRACTOR** engine before doing any work procedures.
- **USE** ladder or raised stands to reach high equipment areas inaccessible from ground.
- **ENSURE** good footing by standing on solid flat surfaces when getting on implement to perform work.
- **FOLLOW** manufacturer's instructions in handling oils, solvents, cleansers, and other chemical agents.
- **DO NOT** change any factory-set hydraulic calibrations to avoid component or equipment failures.
- **DO NOT** modify or alter implement, functions or components.
- **DO NOT WELD** or repair rotating mower components. These may cause vibrations and component failures being thrown from mower.

PERFORM SERVICE, REPAIRS, LUBRICATION AND MAINTENANCE OUTLINED IN IMPLEMENT MAINTENANCE SECTION:

- **INSPECT** for loose fasteners, worn or broken parts, leaky or loose fittings, missing or broken cotter keys and washers on pins, and all moving parts for wear.
- **REPLACE** any worn or broken parts with authorized service parts.
- **LUBRICATE** unit as specified by lubrication schedule
- **NEVER** lubricate, adjust or remove material while it is running or in motion.
- **TORQUE** all bolts and nuts as specified.

BLADE INSPECTION:

- **REPLACE** bent, damage, cracked or broken blades immediately with new blades.
- **AVOID** blade failures and thrown broken blades. **DO NOT** straighten, weld, or weld hard-facing blades.

SAFETY SHIELDS, GUARDS AND SAFETY DEVICES INSPECTION:

- **KEEP** all Deflectors, Chain Guards, Steel Guards, Gearbox Shields, and PTO integral shields, Bands, Side Skirts and Skid Shoes in place and in good condition.
- **REPLACE** any missing, broken or worn safety shields, guards and safety devices.
- Engine Exhaust, some of its constituents, and certain vehicle components contain or emit chemicals known to the state of California to cause cancer, birth defects or other reproductive harm.
- Battery posts, terminals and related accessories contain lead and lead compounds, chemicals known to the state of California to cause cancer, birth defects or other reproductive harm. ***PN HM01***

© 2012 Alamo Group Inc.

PARTS INFORMATION

PARTS INFORMATION

Bush Hog mowers use balanced and matched system components for blade carriers, blades, cuttershafts, knives, knife hangers, rollers, drivetrain components, and bearings. These parts are made and tested to Bush Hog specifications. Non-genuine "will fit" parts do not consistently meet these specifications. The use of “will fit” parts may reduce mower performance, void warranties, and present a safety hazard. Use genuine Bush Hog mower parts for economy and safety. (SPBH-1)

SEE YOUR BUSH HOG DEALER

Operator’s & Parts Manuals

www.algqr.com/bpm

© 2012 Alamo Group Inc.

Decal Location

NOTE: Bush Hog supplies safety decals on this product to promote safe operation. Damage to the decals may occur while in shipping, use, or reconditioning. Bush Hog cares about the safety of its customers, operators, and bystanders, and will replace the safety decals on this product in the field, free of charge (Some shipping and handling charges may apply). Contact your Bush Hog dealer to order replacement decals.

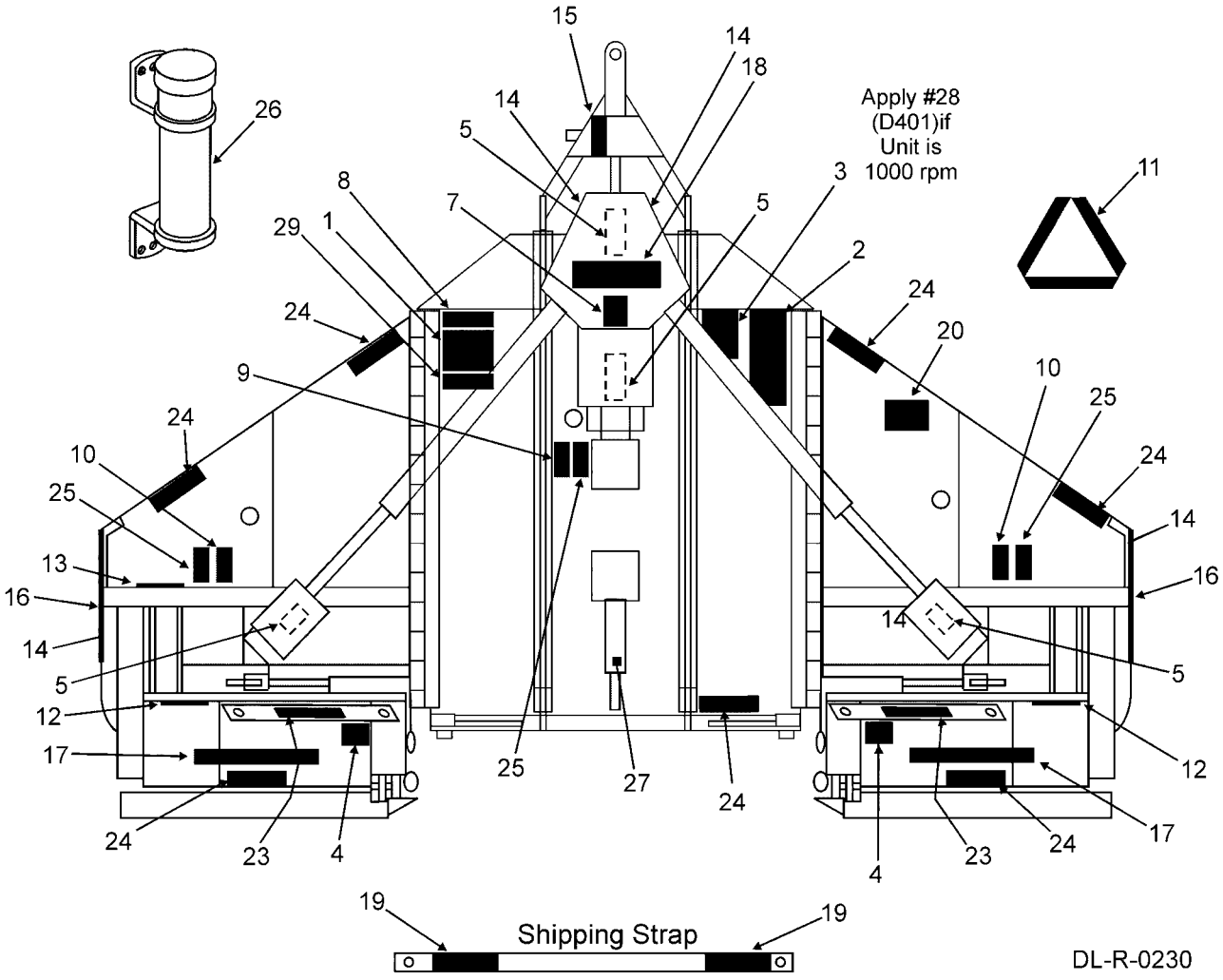

© 2012 Alamo Group Inc.

SAFETY

ITEM	PART NO.	QTY	TYPE	DESCRIPTION
1.	D549	1	DANGER	Multi Hazard
2.	D390	1	WARNING	Pull Type Unit Hazards
3.	D388	1	DANGER	Driveline Hazards
4.	00753840	2	DANGER	Wing Lowering Safety
5.	00756004	3	DANGER	Shield Missing
6.	00756005	2*	DANGER	Rotating Driveline
7.	50058366	1	WARRANTY	5 - Year
8.	D584	1	INSTRUCT	Lube Chart
9.	D137	1	INSTRUCT	CCW Blade Rotation
10.	D138	2	INSTRUCT	CW Rotation
11.	03200347	1	REFLECT	SMV
12.	1458392	2	REFLECT	Red Reflector
13.	1458393	1	REFLECT	Amber Reflector
14.	50071183	4	LOGO	RF15
15.	D518	1	WARNING	Jack Positioning
16.	50054672	2	NAME	Bush Hog (22” x 4.84”)
17.	50057094	2	NAME	Bush Hog (9” x 1.98”)
18.	50057413	1	NAME	Bush Hog (19” x 4.25”)
19.	D519	2	DANGER	Crushing Hazard - Falling
20.	D559	1	WARNING	Genuine Bush Hog Parts
21.	nfs	1	SERIAL PLATE	Serial Number Plate
22.	1006348	6**	WARNING	Tire Explosion Hazard (Not Shown)
23.	D539	2	DANGER	Crushing Hazard - Falling
24.	D614	6	DANGER	Thrown Object Shield Missing
25.	D534	3	WARNING	Torque Blade Bolt to 600 lbs.
26.	50035829	1	INSTRUCT	Canister, Operators Manual
27.	D520	1	IMPORTANT	Transport Lock
28.	D401	1	WARNING	1000 RPM
29.	D813	1	DANGER	Multi Language

*Furnished by Driveline Manufacturer

** Furnished by Wheel Assembly Supplier

Decal Sheets

Flex Wing D420

© 2012 Alamo Group Inc.

Decal Description

© 2012 Alamo Group Inc.

⚠ DANGER

ENTANGLEMENT HAZARD

TO AVOID SERIOUS INJURY OR DEATH:

- DO NOT operate without guards in place and in good condition. PTO and gearbox guarding are SUBJECT TO WEAR.
- STAY AWAY and KEEP hands, feet and body AWAY from rotating blades, drivelines and parts that continue to move after power shut-off. WAIT until all moving elements have stopped.
- ALWAYS REPLACE GUARDS that have been removed for service or maintenance.
- STOP, LOOK and LISTEN for rotating motion before approaching implement.
- DO NOT STEP ON drivelines or guards.

D549_2

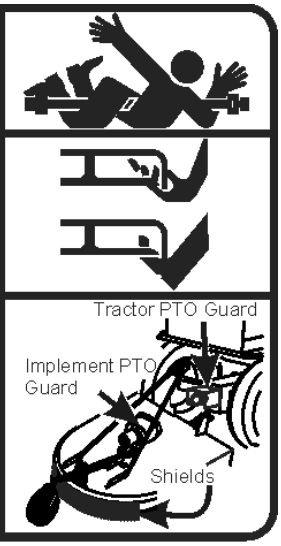

⚠ DANGER

Crushing Hazard - Injury or Death

TO AVOID SERIOUS INJURY OR DEATH: D549_3

- USE tractor equipped with **R**ollover **P**rotective **S**tructure ("ROPS") including roll bar and seat belt. Keep roll bar in raised position.
- STAND CLEAR when removing transport latch, lowering or raising wings.
- IMPLEMENT CAN FALL from hydraulic failure or accidental operation of controls.
- BLOCK UP and securely support equipment before putting hands, feet or body under raised equipment or lifted components.

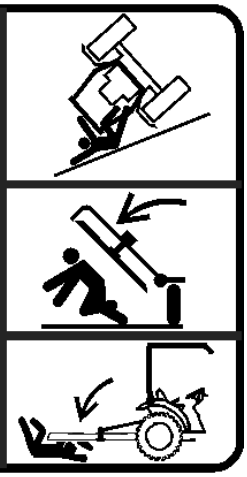

⚠ DANGER

www.algqr.com/bme

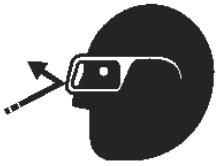

TO AVOID SERIOUS INJURY OR DEATH: D549_5

- READ AND UNDERSTAND the provided Operator's Manuals, safety signs and information decals for tractor and implement before operating equipment.
- CONTACT DEALER immediately if you do not have manuals.
- CONTACT DEALER to explain any instructions not fully understood.
- ALWAYS WEAR safety glasses. D549
- WEAR hard hat, safety shoes and gloves for protection when operating equipment.

D549_2B

© 2012 Alamo Group Inc.

⚠ WARNING

TO AVOID SERIOUS INJURY OR DEATH FROM HIGH PRESSURE HYDRAULIC OIL LEAKS PENETRATING SKIN:

- DO NOT OPERATE equipment with oil or fuel leaks.
- KEEP all hydraulic hoses, lines and connections in good condition and tight before applying system pressure.
- Relieve hydraulic pressure before disconnecting lines or working on the system.
- REMOVE and replace hose if you suspect it leaks. Have dealer test it for leaks.

HIGH PRESSURE FLUID LEAKS CAN BE INVISIBLE. WHEN CHECKING FOR HYDRAULIC LEAKS AND WORKING AROUND HYDRAULIC SYSTEMS:

- DO NOT use hands to check for leaks.
- ALWAYS WEAR safety glasses and impenetrable gloves.
- USE paper or cardboard to search for leaks.
- KEEP hands and body AWAY from pin holes and nozzles ejecting hydraulic fluid.
- Hydraulic fluid may cause gangrene if not surgically removed immediately by a doctor familiar with this form of injury.

D390_1B

⚠ WARNING

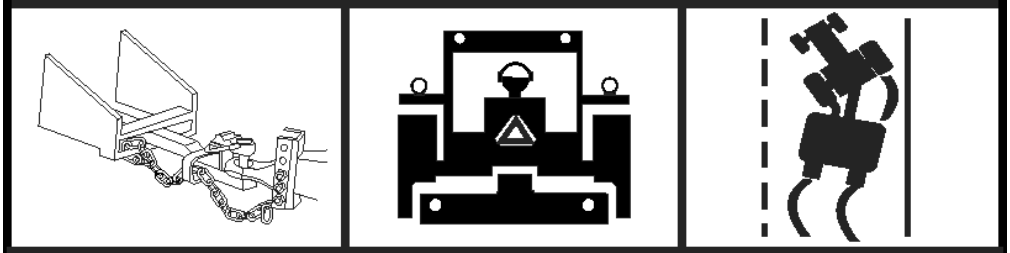

TO AVOID SERIOUS INJURY AND DEATH WHEN TOWING EQUIPMENT:

- DO NOT TOW with trucks or other vehicles.
- ONLY transport with properly sized and equipped tractor. (see Operator's Manual)
- ATTACH implement SAFETY CHAIN to tractor.
- CHECK SMV sign, reflectors and warning lights for visibility behind unit.
- TURN ON tractor flashing warning lights.

TO AVOID LOSS OF TOWING CONTROL:

- DO NOT tow at speeds over 20 mph.
- REDUCE SPEED on inclines, in turns and in poor towing conditions.

D390_2B

© 2012 Alamo Group Inc.

⚠ WARNING

TO AVOID EQUIPMENT AND GRASS FIRES:

- CLEAR AWAY grass or debris from slip clutches, gearboxes, drivelines and decks.

TO AVOID FIRE IGNITION:

- DO NOT ALLOW BLADES TO CONTACT rocks,metal or solid objects.

D390_3B

IMPORTANT

D390_4B

Required for Standard Pull Type Units.

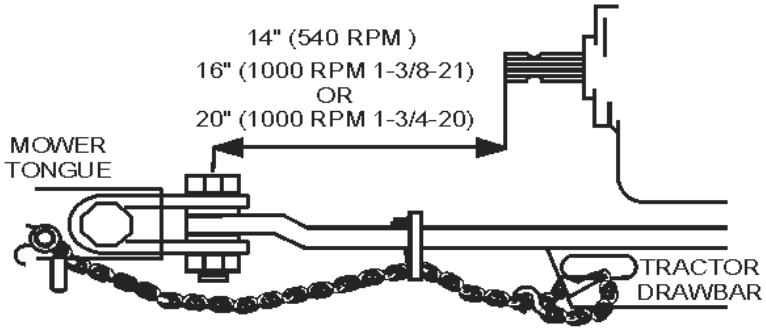

Attach Safety Chain securely.

D390

⚠ WARNING

OPERATE THIS MACHINE AT

1000 RPM

TRACTOR PTO SPEED ONLY.

Overspeeding PTO may cause component failure resulting in bodily injury.

TRACTOR PTO ROTATION: CLOCKWISE

D401_B

© 2012 Alamo Group Inc.

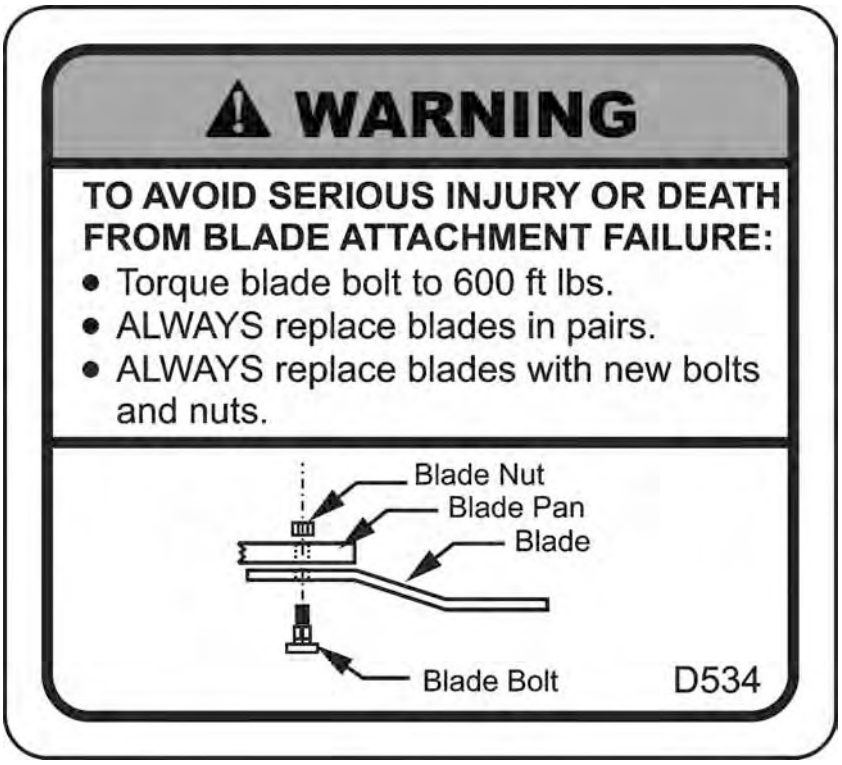

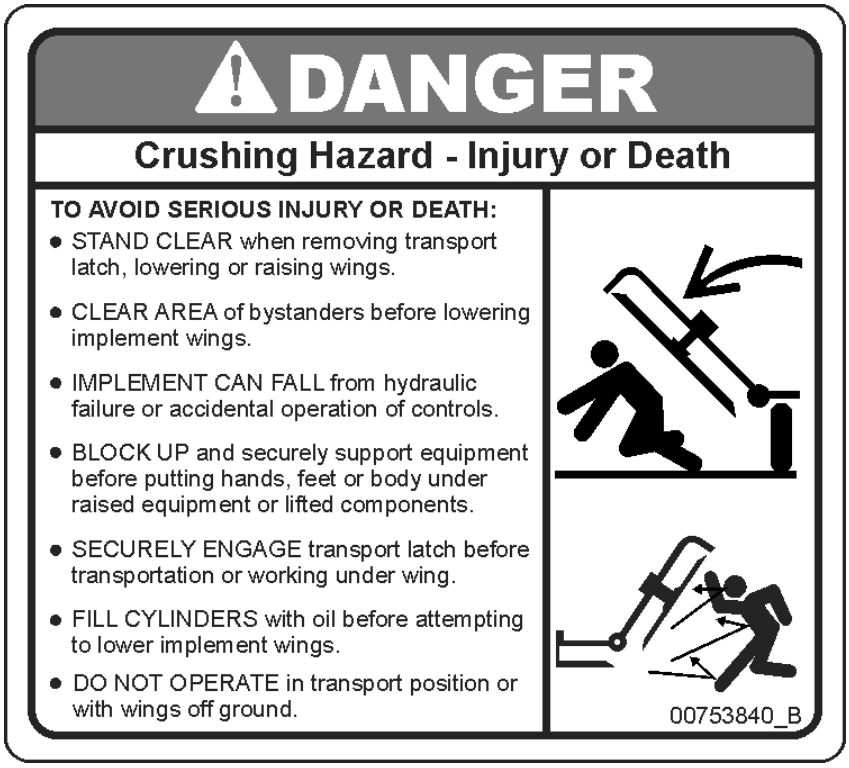

© 2012 Alamo Group Inc.

⚠ PELIGRO

Si no puede leer inglés: antes de poner en funcionamiento este equipo, solicite que alguien le traduzca los mensajes de seguridad o vaya al sitio web para consultar los mensajes de seguridad y las etiquetas ya traducidos.

El Manual del Operador Seguridad vídeo

www.algqr.com/bms www.algqr.com/bvs

⚠ DANGER

Si vous ne savez pas lire le français: avant d'utiliser l'équipement, demandez à une personne de vous traduire les messages de sécurité ou allez sur le site Internet pour voir la traduction des autocollants et des messages de sécurité.

Manuel de l'Opérateur

D813_1 www.algqr.com/bmf

⚠ PERIGO

Caso você não leia inglês: antes de operar o equipamento, peça para alguém traduzir as mensagens de segurança ou visite a web e obtenha tais mensagens ou os decalques traduzidos.

Manual do Operador

www.algqr.com/bmp

⚠ GEFAHR

Falls Sie Deutsch nicht lesen können: Lassen Sie sich, bevor Sie das Gerät in Betrieb nehmen, die Sicherheitshinweise von einer geeigneten Person in Ihre Sprache übersetzen. Oder suchen Sie auf unserer Website nach Übersetzungen von Schilderaufschriften und Sicherheitshinweisen.

Benutzerhandbuch

D813_2 www.algqr.com/bmg

⚠ DANGER

THROWN OBJECT HAZARD

TO AVOID SERIOUS INJURY OR DEATH:
DO NOT OPERATE if Thrown Object Shielding is damaged or missing.

MAINTAIN Thrown Object Shielding

HERE

D614

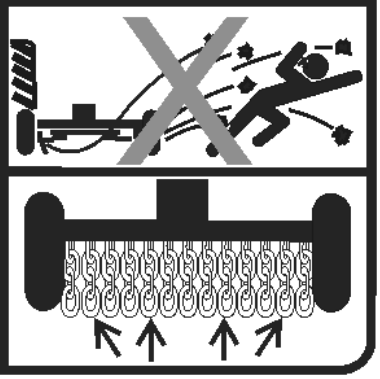

D614_B

© 2012 Alamo Group Inc.

⚠ WARNING

Non-genuine parts can fail catastrophically.
TO AVOID SERIOUS INJURY OR DEATH:

- ONLY use genuine Bush Hog replacement parts.
- Non-genuine parts can fail creating hazardous conditions for operator and bystanders.

Contact local dealer or Bush Hog about repair parts at:

2501 Griffin Ave.,Selma, Al 36701
Customer Service: 800-363-6096.
Email: contactus@bushhog.com www.algqr.com/bpm

D559_1

IMPORTANT

BE AWARE
BE ALERT
BE ALIVE

BE TRAINED
Before Operating this Mower

www.algqr.com/bve

To prevent serious injury to yourself and/or bystanders, be trained in Safe Mowing Practices. Alamo Group Companies as well as AEM and FEMA provide training material that is critical for your Safety and the Safety of others when operating this equipment. Make these Safety Procedures an important part of every workday. Read and understand the Operator's Manual. Do not let untrained individuals operate this equipment. Contact your Dealer, AEM (www.aem.org), FEMA (314-878-2304, www.FarmEquip.org), or Alamo Group (www.Alamo-Group.com) for information on training material or courses that provide training in Safer Operating Practices for Mowers. D559_2

D559

⚠ WARNING — **EXPLOSION HAZARD**

RELEASE ALL AIR PRESSURE BEFORE LOOSENING BOLTS.
FAILURE TO DO SO COULD RESULT IN SERIOUS INJURY OR DEATH
MAX. SPEED: 20 MPH, MAX. WEIGHT: 4000 LBS., MAX. AIR PRESSURE: 40PSI

1006348

⚠ DANGER

CRUSHING HAZARD-WING FALLING

TO AVOID SERIOUS INJURY OR DEATH
BEFORE REMOVING SHIPPING STRAPS:

- FILL WING CYLINDERS with oil
- ENGAGE TRANSPORT Bars/Latches.
- CLEAR AREA OF PERSONS near or under wings.

D519_B

© 2012 Alamo Group Inc.

© 2012 Alamo Group Inc.

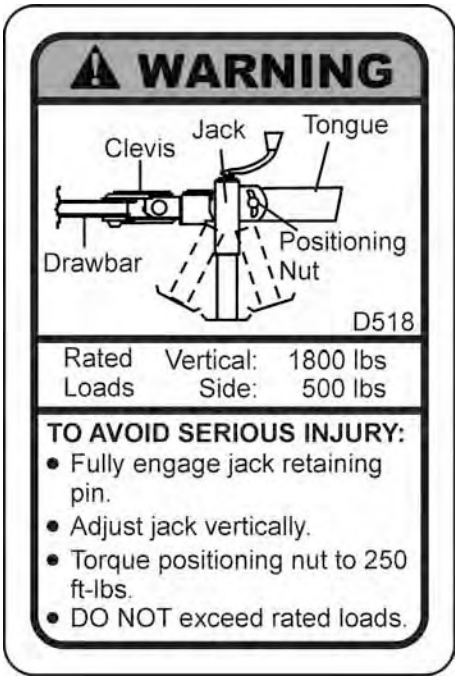

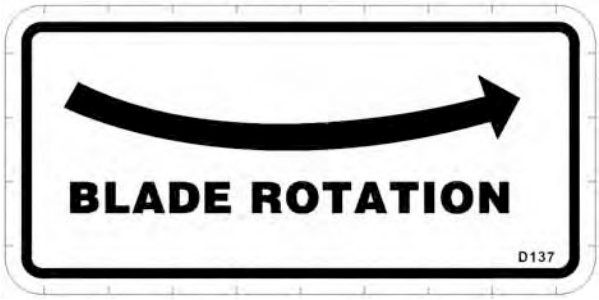

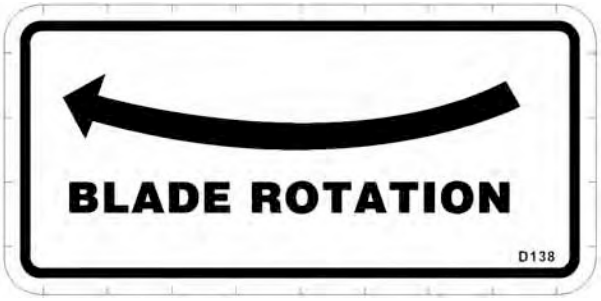

© 2012 Alamo Group Inc.

Federal Laws and Regulations

This section is intended to explain in broad terms the concept and effect of federal laws and regulations concerning employer and employee equipment operators. This section is not intended as a legal interpretation of the law and should not be considered as such.

Employer-Employee Operator Regulations

U.S. Public Law 91-596 (The Williams-Steiger Occupational and Health Act of 1970) OSHA

This Act Seeks:

"...to assure so far as possible every working man and woman in the nation safe and healthful working conditions and to preserve our human resources..."

DUTIES

Sec. 5 (a) Each employer-

(1) shall furnish to each of his employees employment and a place of employment which are free from recognized hazards that are causing or are likely to cause death or serious physical harm to his employees;

(2) shall comply with occupational safety and health standards promulgated under this Act.

(b) Each employee shall comply with occupational safety and health standards and all rules, regulations and orders issued pursuant to this Act which are applicable to his own actions and conduct.

OSHA Training Requirements

Title 29, Code of Federal Regulations Part 1928.57(a)(6). **www.osha.gov**

Operator instructions. At the time of initial assignment and at least annually thereafter, the employer shall instruct every employee who operates an agricultural tractor and implements in the safe operating practices and servicing of equipment with which they are or will be involved, and of any other practices dictated by the work environment.

Keep all guards in place when the machine is in operation;

Permit no riders on equipment

Stop engine, disconnect the power source, and wait for all machine movement to stop before servicing, adjusting, cleaning or unclogging the equipment, except where the machine must be running to be properly serviced or maintained, in which case the employer shall instruct employees as to all steps and procedures which are necessary to safely service or maintain the equipment.

Make sure everyone is clear of machinery before starting the engine, engaging power, or operating the machine.

Employer Responsibilities:

To ensure employee safety during Tractor and Implement operation, it is the employer's responsibility to:

1. Train the employee in the proper and safe operation of the Tractor and Implement.
2. Require that the employee read and fully understand the Tractor and Implement Operator's manual.
3. Permit only qualified and properly trained employees to operate the Tractor and Implement.
4. Maintain the Tractor and Implement in a safe operational condition and maintain all shields and guards on the equipment.
5. Ensure the Tractor is equipped with a functional ROPS and seat belt and require that the employee operator securely fasten the safety belt and operate with the ROPS in the raised position at all times.
6. Forbid the employee operator to carry additional riders on the Tractor or Implement.
7. Provide the required tools to maintain the Tractor and Implement in a good safe working condition and provide the necessary support devices to secure the equipment safely while performing repairs and service.
8. Require that the employee operator stop operation if bystanders or passersby come within 300 feet.

Child Labor Under 16 Years of Age

Some regulations specify that no one under the age of 16 may operate power machinery. It is your responsibility to know what these regulations are in your own area or situation. (Refer to U.S. Dept. of Labor, Employment Standard Administration, Wage & Home Division, Child Labor Bulletin #102.)

© 2012 Alamo Group Inc.

INTRODUCTION SECTION

© 2012 Alamo Group Inc.

INTRODUCTION

We are pleased to have you as a Bush Hog customer. Your Rotary Cutter has been carefully designed with care and built with quality materials by skilled workers to give maximum service with minimum down time. This manual is provided to give you the necessary operating and maintenance instructions for keeping your rotary cutter in top operating condition. Careful use and timely service saves extensive repairs and costly downtime losses. Please read this manual thoroughly. Understand what each control is for and how to use it.

Bush Hog typically offers three types of shielding to protect the operator, passerby, livestock, and property from thrown objects... deflectors, single chain guards, and double chain guards. Shielding should be selected based on the intended use of the mower. Double chain guards or deflectors should be used for highway, right-of-way, parks or greenbelt mowing or all other mowing where human dwellings, vehicles, or livestock could be within 300 feet of the mower. Chain guards are more durable, provide a longer service life and require less maintenance and replacement than deflectors. Single chain guards may be sufficient for agriculture and other mower use only where passersby or property are not within 300 feet of the mower during operation.

No shielding is 100% effective in preventing thrown objects. The possibility of injury and property damage from this hazard can be substantially reduce by selecting proper shielding, maintaining the mower and shielding in good operational condition, inspecting the area for foreign debris before mowing, operating the mower at a minimum cutting height of 6", and keep unprotected persons at a minimum distance of 300 feet from the mower at all times during operation.

Safety is of primary importance to the owner/operator and to the manufacturer. Observe all safety precautions decaled on the machine and noted throughout the manual for safe operation of implement. If any assistance or additional information is needed, contact your authorized Bush Hog dealer. The owner/operator/dealer should know and understand the Safety Messages before assembly and be aware of the hazards of operating this cutter during assembly, use, and maintenance. The Safety Alert Symbol combined with a Signal Word, as seen below, is intended to warn the owner/operator of impending hazards and the degree of possible injury faced when operating this machine.

⚠ DANGER Indicates an imminently hazardous situation that, if not avoided, WILL result in DEATH OR VERY SERIOUS INJURY.

⚠ WARNING Indicates an imminently hazardous situation that, if not avoided, COULD result in DEATH OR SERIOUS INJURY.

⚠ CAUTION Indicates an imminently hazardous situation that, if not avoided, MAY result in MINOR INJURY.

Important Identifies special instructions or procedures that, if not strictly observed, could result in damage to, or destruction of the machine, attachments or the environment.

© 2012 Alamo Group Inc.

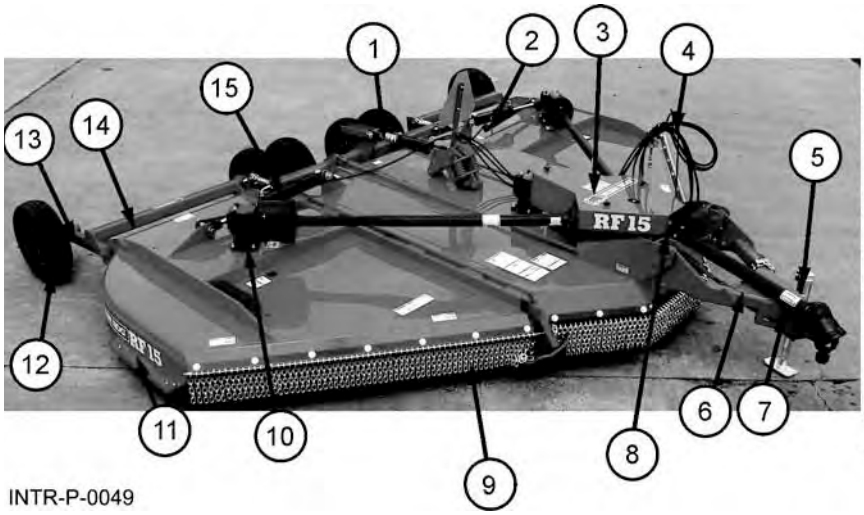

INTR-P-0049

1 Height Adjustment Cylinder
2 Wing Transport Lock
3 Center Gearbox Shield
4 Hose Holder Rod
5 Jackstand
6 Tongue
7 Clevis
8 CV-Joint
9 Chainguard
10 Wing Gearbox
11 Replaceable Wing Skid
12 Laminated Tire
13 Axle Arm
14 Axle
15 Wing Cylinder

***NOTE**: All references made in this manual to right, left, front, rear, top or bottom are as viewed facing the direction of forward travel with implement properly attached to tractor.*

Literature Page

www.algqr.com/ble

The Bush Hog Model RF-15 Rotary Cutter is designed primarily for weed, grass, and brush to 1-1/2" diameter and consists of a center unit with two variable position wings together having a cutting width of 15 feet. Wing operating angles and machine cutting height are independently controlled using hydraulic cylinders. A self-leveling linkage maintains a level cutter at all cutting heights. Power from the tractor PTO is split at the power divider gearbox and supplied to each of the blade gearboxes. Each blade gearbox has two free-swinging uplift blades designed to cut grass, and light brush. Free-swinging blades reduce the shock of impact when a stationary object is hit. Slip clutches are installed on each gearbox for additional protection. Front and rear discharge shields are included as standard equipment.

Equipment Specifications

	RF-15
Cutting Width	180”
Transport Width	96”
Overall Width	188-1/2”
Overall Length	176”
Cutting Height	2” - 13”
HP Required (min)	50HP
Cutting Capacity (max)	1-1/2”
Drawbar Load Rating (min)	1400 lbs
Wing Flex Up	90°
Wing Flex Down	22°

	RF-15
Blade Tip Speed	**540 PTO**
Center	14,963 FPM
Wings	14,963 FPM
Gearbox Rating	
Power Divider	160 HP
Center & Wings	65 HP
LImited Warranty	5 Year
Driveline Size	
Main	CAT 4 CV
Wings	CAT 3
Limited Warranty	1 Year

© 2012 Alamo Group Inc.

INTRODUCTION

KEY OPERATION POINTS

- Cutting performance and distribution are best when cutter is level from side to side. Mower front to rear pitch should be 1” or less.
- In extra heavy material, rear chains will allow better discharge and better distribution than solid rear deflectors or bands.
- Never operate the Flexwing below full PTO speed of 540 or 1000 rpm.
- For good distribution, the distribution baffles must be used.
- Make sure PTO driveline slip clutches are not frozen and are properly adjusted.
- To reduce uneven grass cutting and streaking.
  - make sure tractor rear tire spacing is a minimum of 60” between the inside of the tires.
  - make sure blades are not bent and are in good condition.
  - reduce ground speed to allow more cutting time.
- If Tractor engine is lugging down, shift tractor to a lower gear
- ALWAYS OPERATE WITH THE WING HYDRAULIC CYLINDER CONTROL VALVES IN A FLOAT POSITION.
- For maximum performance and service life, Always use Genuine Bush Hog replacement parts

Operating Noise Level/Sound Pressure

The sound levels at the operator's ear from the attached machine (rotary cutter) are at least 10 dB(A) below the levels from typical Agricultural tractors used to power and transport this machine. Therefore, the Noise emission values given by the OEM of the Agricultural tractor used to power and transport this machine would be valid when this machine is attached to and operated by that Agricultural tractor in all OEM recommended applications.

© 2012 Alamo Group Inc.

LIMITED WARRANTY

☆☆☆☆☆☆☆☆☆☆☆☆☆☆☆☆☆☆☆☆☆☆☆☆☆☆☆☆☆☆☆

Bush Hog warrants to the original purchaser of any new Bush Hog equipment, purchased from an authorized Bush Hog dealer, that the equipment be free from defects in material and workmanship for a period of one (1) year for non-commercial, state and municipalities' use and ninety (90) days for commercial use from date of retail sale. The obligation of Bush Hog to the purchaser under this warranty is limited to the repair or replacement of defective parts.

Replacement or repair parts installed in the equipment covered by this limited warranty are warranted for ninety (90) days from the date of purchase of such part or to the expiration of the applicable new equipment warranty period, whichever occurs later. Warranted parts shall be provided at no cost to the user at an authorized Bush Hog dealer during regular working hours. Bush Hog reserves the right to inspect any equipment or parts which are claimed to have been defective in material or workmanship.

DISCLAIMER OF IMPLIED WARRANTIES & CONSEQUENTIAL DAMAGES

Bush Hog's obligation under this limited warranty, to the extent allowed by law, is in lieu of all warranties, implied or expressed, **INCLUDING IMPLIED WARRANTIES OF MERCHANTABILITY AND FITNESS FOR A PARTICULAR PURPOSE** and any liability for incidental and consequential damages with respect to the sale or use of the items warranted. Such incidental and consequential damages shall include but not be limited to: transportation charges other than normal freight charges; cost of installation other than cost approved by Bush Hog; duty; taxes; charges for normal service or adjustment; loss of crops or any other loss of income; rental of substitute equipment, expenses due to loss, damage, detention or delay in the delivery of equipment or parts resulting from acts beyond the control of Bush Hog.

THIS LIMITED WARRANTY SHALL NOT APPLY:

1. To vendor items which carry their own warranties, such as engines, tires, and tubes.
2. If the unit has been subjected to misapplication, abuse, misuse, negligence, fire or other accident.
3. If parts not made or supplied by Bush Hog have been used in connection with the unit, if, in the sole judgement of Bush Hog such use affects its performance, stability or reliability.
4. If the unit has been altered or repaired outside of an authorized Bush Hog dealership in a manner which, in the sole judgement of Bush Hog, affects its performance, stability or reliability.
5. To normal maintenance service and normal replacement items such as gearbox lubricant, hydraulic fluid, worn blades, or to normal deterioration of such things as belts and exterior finish due to use or exposure.
6. To expendable or wear items such as teeth, chains, sprockets, belts, springs and any other items that in the company's sole judgement is a wear item.

NO EMPLOYEE OR REPRESENTATIVE OF BUSH HOG IS AUTHORIZED TO CHANGE THIS LIMITED WARRANTY IN ANY WAY OR GRANT ANY OTHER WARRANTY UNLESS SUCH CHANGE IS MADE IN WRITING AND SIGNED BY BUSH HOG'S SERVICE MANAGER, 2501 GRIFFIN AVE., SELMA, ALABAMA 36703.

☆☆☆☆☆☆☆☆☆☆☆☆☆☆☆☆☆☆☆☆☆☆☆☆☆☆☆☆☆☆☆

Record the model number, serial number and date purchased. This information will be helpful to your dealer if parts or service are required.

MAKE CERTAIN THE WARRANTY HAS BEEN FILED WITH BUSH HOG SELMA, ALABAMA

MODEL NUMBER ________________________

SERIAL NUMBER ________________________

DATE OF RETAIL SALE ___________________

INTRODUCTION

© 2012 Alamo Group Inc.

ASSEMBLY SECTION

© 2012 Alamo Group Inc.

ASSEMBLY

DEALER SET-UP INSTRUCTIONS

The mower as received from the factory is virtually completely assembled and requires minimum time to complete assembly ready for sale.

⚠WARNING On a fully assembled unit, do not release the Wing Retaining Strap until the hoses are attached to the tractor and the Wing Cylinders are filled with oil. Always keep bystanders away while raising and lowering the wings

To lower the wings, hook the hydraulic hoses to the tractor. From the Operators Seat use the tractor hydraulic control levers to fill wing cylinders with oil (Refer to Operation Section). Keep coworkers and bystanders away from the implement while filling. For implements with the wings in the raised or transport position, filling the cylinders should raise the wings slightly and loosen the wing retaining lock. DO NOT release the wing Transport Bar/Latch if there is a force on the lock. Use tractor hydraulic control levers to lower the wing(s). Continue to hold the control lever until both wings are down and the wing cylinders are fully retracted or extended. Continue to cycle the cylinders several times by raising and lowering the wings fully to remove any trapped air. If there is sponginess during the raising cycle, this may indicate that air is entrapped in the hydraulic circuit. Continue to cycle the cylinders until all sponginess is removed.

The implement wings should lower slowly when they are allowed to float down and are not powered down. This is a safety feature built into the system. If the wings fall rapidly, have the cylinders repaired before operating the implement. *Asm-0002*

© 2012 Alamo Group Inc.

ASSEMBLY

ASSEMBLY

Select a suitable work area large enough to allow for lowering of the wings. Use extreme caution when connecting the mower to the tractor. The mower should be securely resting at ground level or setting on blocks. Keep hands and feet from under the mower deck and clear of pinch points between the tractor hitch arms and mower pins.

1. Use the implement jack to raise the implement tongue until it is even with the tractor drawbar. Insert the jack into the jack adapter in the implement tongue and swivel it so that it is vertical. Follow the instructions on the jack. Install the jack retaining pin. Measure the height of the tractor drawbar and raise the implement tongue to the same height.

2. Make sure the tractor PTO is the correct speed and shaft size for the implement. Ensure the drawbar is extended the proper distance from the Tractor PTO shaft for desired PTO speed; 540 PTO is 14".
3. Carefully back tractor to mower. Do not allow coworkers or bystanders between the tractor and the implement while backing. When dismounting the tractor ALWAYS shut down the tractor, disengage the PTO, and set the parking brake before dismounting.

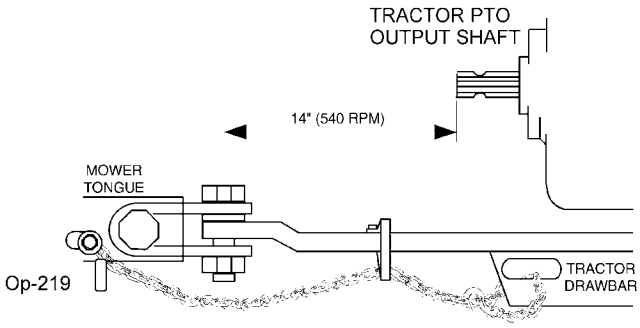

4. Make sure the wing Transport Bars/Latches are locked in the position to hold the wings vertical before removing shipping strap. **Figure AsmP-R-0118**

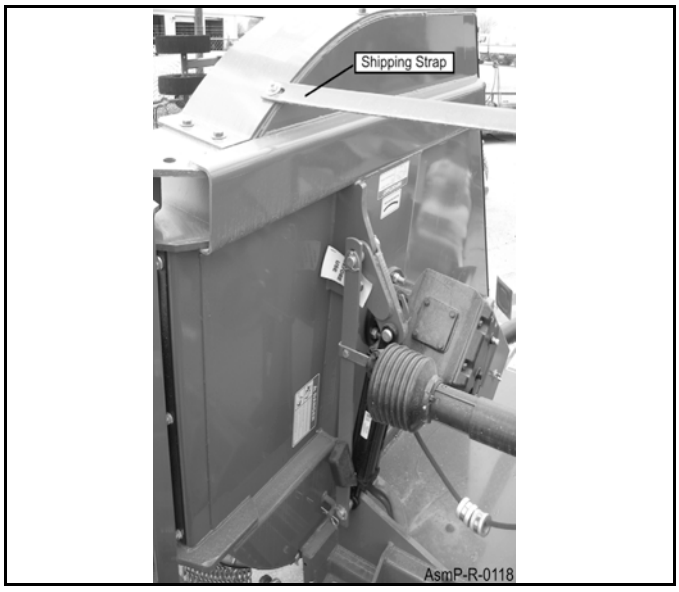

5. Stand between the wings of the implement and remove nuts holding the shipping strap in place and remove strap.

WARNING Do not stand outside of the wing to remove the shipping strap, if the wing fell it could kill you. Make sure no bystanders are under the wing or in the area where the wing could fall.

Reinstall nut and flatwasher to retain side skirt.

© 2012 Alamo Group Inc.

6. Filling the cylinders with oil should raise the wings slightly and loosen the wing Transport Bars/Latches retaining pin. ***NOTE:*** *DO NOT release the wing Transport Bar/Latch if there is a force on the pin*. If there is a force holding the Transport Bar/Latch in place, use the tractor hydraulic control levers while in the tractor seat to raise the wings until the force is relieved. Release the Transport Bar/Latch and secure in the storage location. **Figure AsmP-R-0119**

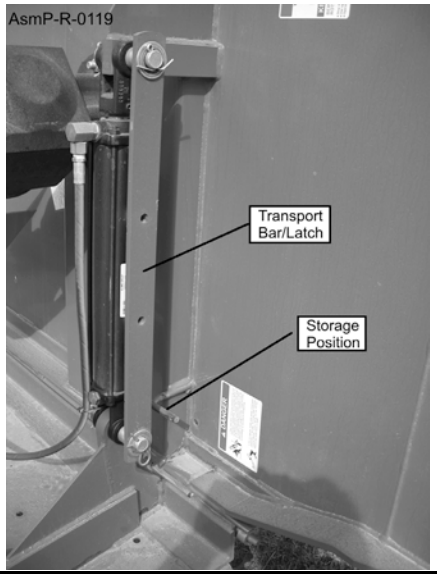

7. From the tractor seat use the tractor hydraulic control levers to lower the wing(s).

⚠WARNING Keep coworkers and bystanders away from the implement while filling.

8. Continue to hold the control lever until both wings are down and the wing cylinders are fully extended. Continue to cycle the cylinders several times by raising and lowering the wings fully to remove any trapped air. If there is sponginess during the raising cycle, this may indicate that air is trapped in the hydraulic circuit. Continue to cycle the cylinders until all sponginess is removed.
9. Test to make sure the wings lower slowly when they are allowed to float down and are not powered down. This is a safety feature built into the system. If the wings fall rapidly, have the hydraulic system or cylinders repaired before operating the implement.

CONNECTING DRIVELINE

⚠DANGER **DO NOT** use a PTO adapter to attach a non-matching Implement driveline to a Tractor PTO. Use of an adapter can double the operating speed of the Implement resulting in excessive vibration, thrown objects, and blade and implement failure. Adapter use will also change the working length of the driveline exposing unshielded driveline areas. Serious bodily injury and/or equipment failure can result from using a PTO adapter. Consult an authorized dealer for assistance if the Implement driveline does not match the Tractor PTO. (S3PT-14)

⚠CAUTION Do not connect the driveline to the tractor PTO until the implement is securely connected to the tractor. Serious injury might occur from the driveline separating from the tractor.

© 2012 Alamo Group Inc.

⚠WARNING When attaching the Implement input driveline to the Tractor PTO, it is important that the connecting yoke spring activated locking collar slides freely and the locking balls are seated securely in the groove on the Tractor PTO shaft. Push and pull the driveline back and forth several times to ensure it is securely attached. A driveline not attached correctly to the Tractor PTO shaft could come loose and result in personal injury and damage to the Implement. (S3PT-17)

DRIVELINE ATTACHMENT

The driveline yoke and tractor PTO shaft must be dirt free and greased for attachment.

To connect the mower driveline to the tractor PTO output shaft, pull the driveline yoke collar back and align the grooves and splines of the yoke with those of the PTO shaft. Push the driveline yoke onto the PTO shaft, release the locking collar, and position the yoke until the locking collar balls are seated onto the PTO shaft. Push and pull the driveline back and forth several times to ensure a secure attachment. *OPS-R-0003_I*

⚠WARNING Never engage the tractor PTO if the implement and implement driveline are securely connected to the tractor. Serious injury could occur if the tractor moved and the driveline separated.

⚠ CAUTION Many of the equipment components are **HEAVY** (60 lbs or greater) and Special Lifting Procedures are recommended. Use lifting assistance such as mechanical assistance, two people, and proper lifting techniques when connecting or installing the driveshaft to reduce the possibility of back injuries.

1. Remove single clamp bolt from main driveline implement connection yoke and insert onto power divider gearbox shaft. Insert clamp bolt and tighten to 130 ft. lbs.

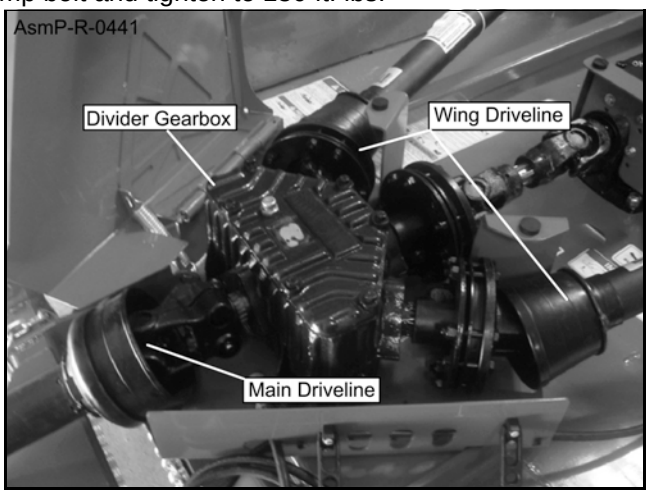

2. Install gearbox vents or vent dipsticks if not installed.Check all gearbox lube levels.

© 2012 Alamo Group Inc.

ASSEMBLY

Driveline Length Check

WARNING Before operating the Implement, check to make sure the Implement input driveline will not bottom out or become disengaged. Bottoming out occurs when the inner shaft penetrates the outer housing until the assembly becomes solid-it can shorten no more. Bottoming out can cause serious damage to the Tractor PTO by pushing the PTO into the Tractor and through the support bearings or downward onto the PTO shaft, breaking it off. A broken driveline can cause personal injury. (S3PT-18)

When fitting the mower to the tractor, the telescoping driveline must be inspected to ensure that at its most compressed position, the profiles do not “bottom out”, and when at its farthest extended position, there is sufficient engagement between the profiles to operate safely. At its shortest length, there must be at least a 1” clearance between each profile end and opposite profile universal joint. At its farthest operating extension, a minimum profile engagement of 12” must be maintained.

“Bottoming Out” Check Procedure

- Disconnect driveline from the tractor and slide the profiles together until fully compressed.
- Place a mark on the inner shield 1/8” from the end of the outer shield and reattach the driveline to the PTO shaft.
- With the ***PTO NOT TURNING***, slowly drive the tractor with mower attached through the sharpest turn possible and watch shaft movement. With the ***PTO NOT TURNING***, slowly drive the tractor with the mower attached through the most severe terrain conditions expected and watch shaft movement.
- If the distance between the mark and the outer shield becomes less than 2” at any point there is a potential problem bottoming out the driveline and the driveline should be replaced with shorter driveline. Contact your local dealer or Technical Service for proper directions. *OPS-R-0004_J*

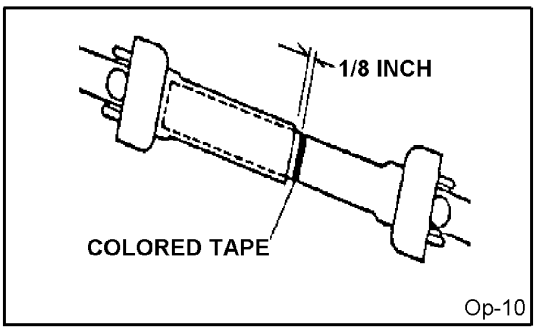

Driveline in maximum compressed position

NOTE: *If tractor has a 540 RPM PTO, adjusting drawbar to 16 inch position, it will gain an additional 2 inches of telescoping length.*

Engagement Check Procedure

- With the driveline attached, position the mower to the point where the telescoping driveline is at its maximum extension. Completely shut down the tractor and secure in position.
- Mark the inner driveline shield 1/8” from the end of the outer shield.
- Disconnect the driveline from the tractor and separate the two driveline halves.
- Measure the distance from the mark to the end of the inner profile. This length is the amount the driveline profiles were engaged.
- If the engaged length is less than 12” the shaft is considered too short and should be replaced with a longer shaft. Consult an authorized dealer to purchase the required driveline length.

NOTE: *If the driveline cannot be shortened and still maintain the required profile engagement, the operator must be made aware of terrain conditions and avoid situations which pose a potential problem to avoid damaging the driveline or move drawbar to 16” or 20” position for required clearance.*

© 2012 Alamo Group Inc.

TIRES AND WHEELS

Before installing any tires and wheels make certain the Cutter is jacked up high enough and is securely supported. When installing laminated or airplane tires, be sure the flat side of the lug nut is against the wheel. There are only three types of tires that can be used on this cutter DO NOT USE ANY OTHER TYPE OF TIRE OR WHEEL, such as automotive tires and rims. DO NOT EXCEED THE MAXIMUM SPEED FOR EACH TYPE OF TIRE. As excessive speed can cause damage to the machine, tire, and wheel.

When installing Laminated Tires and Wheels note the direction of travel and the curvature of rubber segments in the tire and install as shown in **Figure Asm-R-0127**. Do not exceed 20 M.P.H. on Laminated Tires. When removing Airplane Tires, let all of the air out of the tire before removing lug nuts or wheel bolts or nuts. Remove valve core to make certain that there is no air pressure left in tube before separating wheel halves to dismount tires. DO NOT LOOSEN WHEEL CLAMP BOLTS BEFORE PRESSURE IS REMOVED FROM TUBE AND TIRE TO PREVENT EXPLOSIVE SEPERATION OF WHEEL HALVES WITH POSSIBLE SERIOUS BODILY INJURY. Do not exceed 20 M.P.H. on Airplane or Rib Implement Tires.

Maximum airplane tire inflation pressure is 50 PSI, minimum inflation pressure is 20 PSI. Inflate ribbed implement tires to manufacturer rated PSI as shown on the tire sidewall.

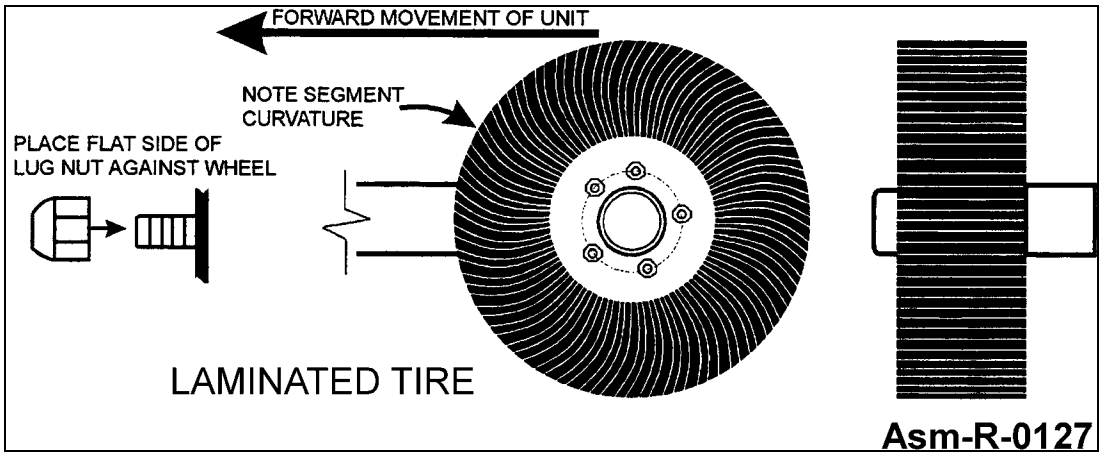

© 2012 Alamo Group Inc.

ASSEMBLY

Asm-R-0213

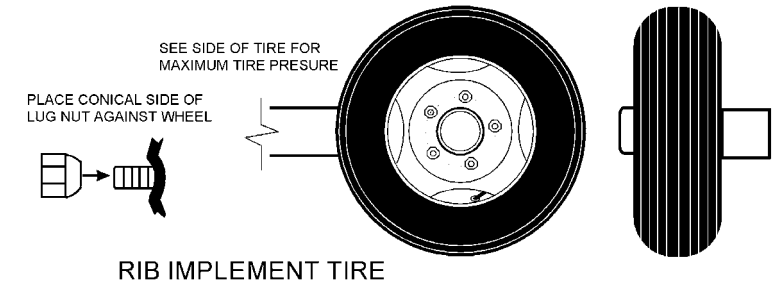

RIB IMPLEMENT TIRE

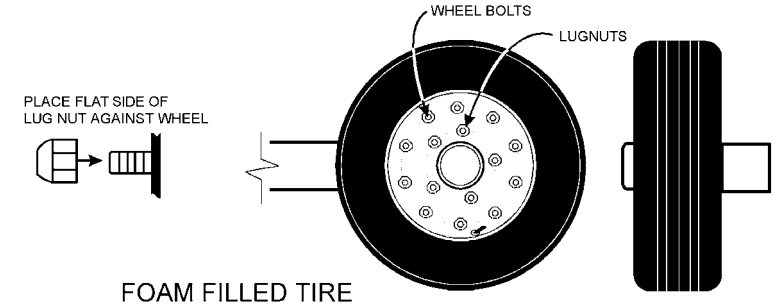

FOAM FILLED TIRE

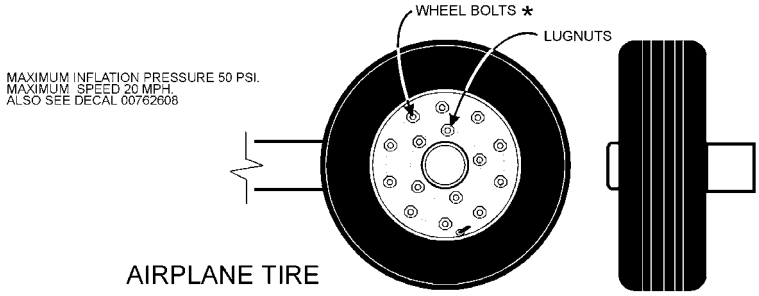

AIRPLANE TIRE

WARNING **EXPLOSION HAZARD**

RELEASE ALL AIR PRESSURE BEFORE LOOSENING BOLTS.
FAILURE TO DO SO COULD RESULT IN SERIOUS INJURY OR DEATH
MAX. SPEED: 20 MPH, MAX. WEIGHT: 4000 LBS., MAX. AIR PRESSURE: 40PSI

1006348

Lubricate the PTO drivelines and wheel hubs according to the lubrication information found in the Maintenance Section.

Mower is now assembled and ready for pre-delivery checks.

© 2012 Alamo Group Inc.

OPERATION SECTION

© 2012 Alamo Group Inc.

OPERATION

BUSH HOG RF-15 ROTARY MOWER
OPERATION INSTRUCTIONS

Bush Hog rotary mowers are manufactured with quality material by skilled workers. These mowers are designed to cut grass, weeds, small brush and other vegetative material up to 1-1/2" diameter in areas such as pastures and along highway right-of-ways. The mower is equipped with protective deflectors and/or chain guards to prevent objects being thrown from the mower by the blades, however, no shielding is 100% effective. All shields, guards, deflectors, and chains equipped on the unit must be maintained on the mower in good operational condition.

It is the operator's responsibility to be knowledgeable of all potential operating hazards and to take every reasonable precaution to ensure oneself, others, animals, and property are not injured or damaged by the mower, tractor, or a thrown object. Do not operate the mower if passersby, pets, livestock, or property are within 300 feet of the unit unless:

- **All THROWN OBJECT SHIELDING** including, Front and Rear Deflectors, Chains Guards, Steel Guards, Bands, Side Skirts and Skid Shoes in place and in good condition when mowing.
- Mower sections or wing are adjusted to be close and parallel to ground without exposing blades.
- **MOWING AREA** has been inspected and foreign materials and debris have been removed.

PASSERSBY are inside enclosed vehicle.This section of the Operator's Manual is designed to familiarize, instruct, and educate safe and proper mower use to the operator. Pictures contained in this section are intended to be used as a visual aid to assist in explaining the operation of a rotary mower. Some pictures may show shields removed for purposes of clarity. NEVER OPERATE this implement without all shields in place and in good operational condition. The operator must be familiar with the mower and tractor operation and all associated safety practices before operating the mower and tractor. Proper operation of the mower, as detailed in this manual, will help ensure years of safe and satisfactory use of the mower

IMPORTANT: To avoid mower damage, retorque all bolts after the first 10 hours of operation. Retighten blade carrier retaining nut on gearbox lower shafts to 450 ft. lbs.

READ AND UNDERSTAND THE ENTIRE OPERATING INSTRUCTIONS AND SAFETY SECTION OF THIS MANUAL AND THE TRACTOR MANUAL BEFORE ATTEMPTING TO USE THE TRACTOR AND IMPLEMENT. If you do not understand any of the instructions, contact your nearest authorized dealer for a full explanation. Pay close attention to all safety signs and safety messages contained in this manual and those affixed to the implement and tractor. *OPS-U- 0001*

READ, UNDERSTAND, and FOLLOW the following Safety Messages. Serious injury or death may occur unless care is taken to follow the warnings and instructions stated in the Safety Messages. Always use good common sense to avoid hazards. (SG-2)

⚠ PELIGRO Si no lee ingles, pida ayuda a alguien que si lo lea para que le traduzca las medidas de seguridad. (SG-3)

© 2012 Alamo Group Inc.

1. OPERATOR REQUIREMENTS

Safe operation of the unit is the responsibility of a qualified operator. A qualified operator has read and understands the implement and tractor Operator's Manuals and is experienced in implement and tractor operation and all associated safety practices. In addition to the safety messages contained in this manual, safety signs are affixed to the implement and tractor. If any part of the operation and safe use of this equipment is not completely understood, consult an authorized dealer for a complete explanation.

If the operator cannot read the manuals for themselves or does not completely understand the operation of the equipment, it is the responsibility of the supervisor to read and explain the manuals, safety practices, and operating instructions to the operator.

Safe operation of equipment requires that the operator wear approved Personal Protective Equipment (PPE) for the job conditions when attaching, operating, servicing, and repairing the equipment. PPE is designed to provide operator protection and includes the following safety wear:

PERSONAL PROTECTIVE EQUIPMENT (PPE)

- Always Wear Safety Glasses
- Hard Hat
- Steel Toe Safety Footwear
- Gloves
- Hearing Protection
- Close Fitting Clothing
- Respirator or Filter Mask (depends on operating conditions) *OPS-U- 0002*

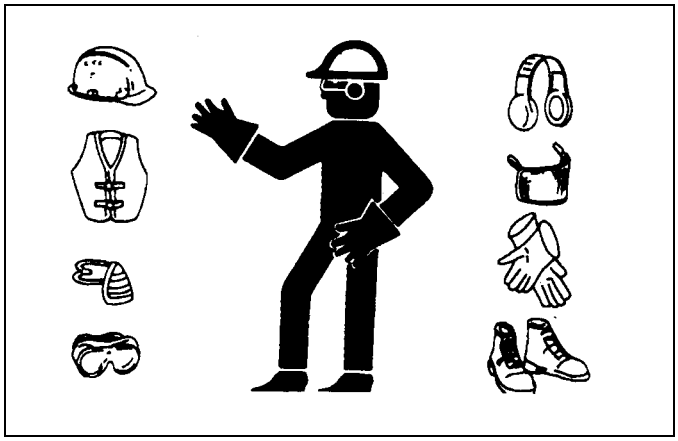

⚠ DANGER

DO NOT use drugs or alcohol immediately before or while operating the Tractor and Implement. Drugs and alcohol will affect an operator's alertness and coordination and therefore affect the operator's ability to operate the equipment safely. Before operating the Tractor or Implement, an operator on prescription or over-the-counter medication must consult a medical professional regarding any side effects of the medication that would hinder their ability to operate the Equipment safely. NEVER knowingly allow anyone to operate this equipment when their alertness or coordination is impaired. Serious injury or death to the operator or others could result if the operator is under the influence of drugs or alcohol. (SG-27)

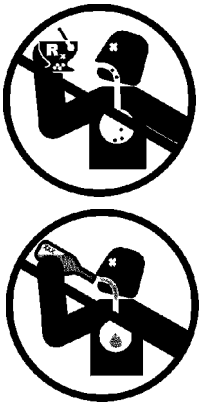

© 2012 Alamo Group Inc.

OPERATION

2. TRACTOR REQUIREMENTS

The tractor used to operate the mower must have the power capacity to lift, pull, and operate the Power Take Off (PTO) at the mower's rated speed while traveling at a ground speed between 2 and 5 MPH. Operating the mower with a tractor that does not meet the following requirements may cause tractor or mower damage and be a potential danger to the operator and passersby.

Tractor Requirements and Capabilities

- ASABE approved Roll-Over Protective Structure (ROPS) or ROPS cab and seat belt.
- Tractor Safety Devices ..... Slow Moving Vehicle (SMV) emblem, lighting, PTO master shield
- Tractor Horsepower:
  - -Minimum ..... 50 HP
  - -Maximum ..... 90 HP
- Drawbar ..... 14" length for 540 RPM; rated to carry weight of mower, safety chain attachment point
- Drawbar Vertical Load ..... 1400 lbs.
- Hydraulics ..... Minimum of 1 hydraulic port (extra 3-spool valve required). Minimum 2 ports, 3 ports recommended if additional 3-spool control valve is not used.
- Front End Weight ..... As needed to maintain 20% weight on front axle
- Power Take Off ..... 540 RPM 6-spline

2.1 ROPS and Seat Belt

The tractor must be equipped with a Roll-Over-Protective-Structure (ROPS) (tractor cab or roll-bar) and seat belt to protect the operator from falling off the tractor, especially during a roll over where the driver could be crushed and killed. Only operate the tractor with the ROPS in the raised position and seat belt fastened. Tractor models not equipped with a ROPS and seat belt should have these life saving features installed by an authorized dealer. *OPS-U- 0003*

⚠WARNING Operate this Equipment only with a Tractor equipped with an approved roll-over-protective system (ROPS). Always wear seat belts. Serious injury or even death could result from falling off the tractor--particularly during a turnover when the operator could be pinned under the ROPS. (SG-7)

2.2 Tractor Safety Devices

If transporting or operating the tractor and implement near a public roadway, the tractor must be equipped with proper warning lighting and a Slow Moving Vehicle (SMV) emblem which are clearly visible from the rear of the unit. Lights and a SMV emblem must be equipped directly on implements if the visibility of the tractor warning signals are obscured.

Maintain all manufacturer equipped safety shields and guards. Always replace shields and guards that were removed for access to connect, service, or repair the tractor or implement. Never operate the tractor PTO with the PTO master shield missing or in the raised position. *OPS-U- 0004*

© 2012 Alamo Group Inc.

2.3 Tractor Horsepower

The horsepower required to operate the mower depends on several operating factors including the vegetation to be cut, terrain condition, operator experience, condition of the mower and tractor, and others. For most mowing conditions, the the F4-15 mower requires a tractor with a minimum of 50 HP. Operating the mower with a tractor that does not have adequate power may damage the tractor engine. Exceeding 90 HP may cause mower damage by overpowering the unit in heavy cutting conditions.

2.4 Front End Weight

A minimum of 20% total tractor weight must be maintained on the tractor front end at all times. Front end weight is critical to maintain steering control and to prevent the tractor from rearing up while driving. If the front end is too light, add weight until a minimum of 20% total weight is reached on the front tires. Front weights and weight carriers can be purchased through an authorized tractor dealership. *OPS-U- 0005*

Drawbar

The tractor drawbar must be positioned at a certain length based on the operating speed of the mower for proper driveline operation. If the mower is a 540 RPM unit, position the drawbar length from shaft end to hitch hole at 14".

Ensure that the drawbar is rated to carry the tongue weight of the mower.

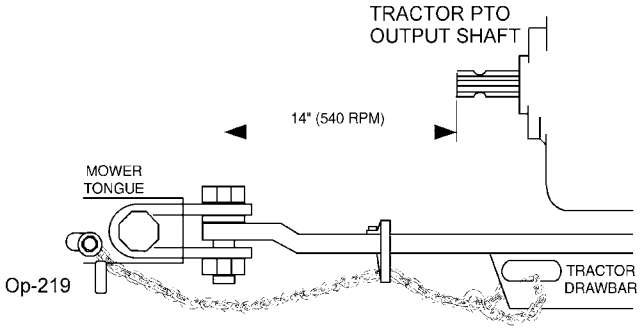

2.5 Power Take Off (PTO)

Depending on the unit, the mower is designed to operate at a PTO speed of 540 RPM. Most tractors operate at either 540, or a combination of 540 and 1000 RPM PTO speeds. The operating speed of the mower and tractor can be determined by the number of splines on the driveline yoke and PTO output shaft. Those operating at 540 RPM will have a 6-spline shaft and those operating at 1000 RPM will have a 21-spline shaft or a 1-3/4" 20 spline shaft. *Refer to the tractor owner's manual for instructions to change PTO speeds on models that operate at more than one speed.*

If operating an older model tractor where the tractor's transmission and PTO utilize one master clutch, an over-running clutch must be used between the PTO output shaft and the driveline of the mower. An authorized tractor dealer can provide the over-running clutch and its installation if needed. *OPS-U- 0006_E*

⚠ DANGER

DO NOT use a PTO adapter to attach a non-matching Implement driveline to a Tractor PTO. Use of an adapter can double the operating speed of the Implement resulting in excessive vibration, thrown objects, and blade and implement failure. Adapter use will also change the working length of the driveline exposing unshielded driveline areas. Serious bodily injury and/or equipment failure can result from using a PTO adapter. Consult an authorized dealer for assistance if the Implement driveline does not match the Tractor PTO. (S3PT-14)

© 2012 Alamo Group Inc.

⚠WARNING Never operate the Tractor and Mower if the Implement input driveline is directly connected to the Tractor transmission. Tractor braking distances can be substantially increased by the momentum of the rotating Mower blades driving the Tractor transmission even though the Tractor clutch has been disengaged. Install an over running clutch between the Tractor PTO and the Mower driveline to prevent this potentially dangerous situation. (S3PT-16)

2.6 Tire Spacing

Tractor tires should be set a minimum of 60”(1.5 mm) apart measured from inside of tire to inside of tire. Refer to the tractor Operator’s Manual or consult an authorized dealer for instructions to change tractor tire spacing. *OPS-R- 0062*

3. GETTING ON AND OFF THE TRACTOR

Before getting onto the tractor, the operator must read and completely understand the implement and tractor operator manuals. If any part of either manual is not completely understood, consult an authorized dealer for a complete explanation. *OPS-U- 0007*

⚠WARNING Do not mount or dismount the Tractor while the tractor is moving. Mount the Tractor only when the Tractor and all moving parts are completely stopped. (SG-12)

3.1 Boarding the Tractor

Use both hands and equipped handrails and steps for support when boarding the tractor. Never use control levers for support when mounting the tractor. Seat yourself in the operator’s seat and secure the seat belt around you.

Never allow passengers to ride on the tractor or attached equipment. Riders can easily fall off and be seriously injured or killed from falling off and being ran over. It is the operator’s responsibility to forbid all extra riders at all times. *OPS-U- 0008*

© 2012 Alamo Group Inc.

⚠ DANGER Never allow children to operate, ride on, or come close to the Tractor or Implement. Usually, 16-17 year-old children who are mature and responsible can operate the implement with adult supervision, if they have read and understand the Operator's Manuals, been trained in proper operation of the tractor and Implement, and are physically large enough to reach and operate the controls easily. (SG-11)

⚠ DANGER Never allow children or other persons to ride on the Tractor or Implement. Falling off can result in serious injury or death. (SG-10)

3.2 Dismounting the Tractor

Before dismounting, park the tractor and implement on a reasonably level surface, apply the parking brake, idle the engine down, disengage the PTO, and lower the implement to the ground. Shut down the tractor engine according to the operator's manual, remove the key, and wait for all motion to completely stop. Never leave the seat until the tractor, its engine and all moving parts have come to a complete stop.

Use hand rails and steps when exiting the tractor. Be careful of your step and use extra caution when mud, ice, snow or other matter has accumulated on the steps or hand rails. Use all handrails and steps for support and never rush or jump off the tractor. *OPS-U- 0009*

4. STARTING THE TRACTOR

The operator must have a complete understanding of the placement, function, and operational use of all tractor controls before starting the tractor. Review the tractor operator's manual and consult an authorized dealer for tractor operation instructions if needed.

Essential Tractor Controls:

- Locate the light control switch.
- Locate the engine shut off control.
- Locate the brake pedals and the clutch.
- Locate the PTO control.
- Locate the 3-point hitch control lever.
- Locate the hydraulic remote control levers.

Before starting the tractor ensure the following:

- Conduct all pre-start operation inspection and service according to the tractor operator's manual.
- Make sure all guards, shields, and other safety devices are securely in place.
- The parking brake is on.
- The PTO control lever is disengaged.
- The 3-point hitch control lever is in the lowered position.
- The hydraulic remote control levers are in the neutral position.
- The tractor transmission levers are in park or neutral.

Refer to the tractor owner's manual for tractor starting procedures. Only start the tractor while seated and belted in the tractor operator's seat. Never bypass the ignition switch by short circuiting the starter solenoid.

After the tractor engine is running, avoid accidental contact with the tractor transmission to prevent sudden and unexpected tractor movement. *OPS-U-0028*

© 2012 Alamo Group Inc.

DANGER Never run the Tractor engine in a closed building or without adequate ventilation. The exhaust fumes can be hazardous to your health. (SG-23)

DANGER Start tractor only when properly seated in the Tractor seat. Starting a tractor in gear can result in injury or death. Read the Tractor operators manual for proper starting instructions. (SG-13)

5. CONNECTING THE MOWER TO THE TRACTOR

Use extreme caution when connecting the mower to the tractor. The mower should be securely resting at ground level or setting on blocks. Keep hands and feet from under the mower deck and clear of pinch points between the tractor hitch arms and mower pins. *OPS-R-0001*

DANGER Always shut the Tractor completely down, place the transmission in park, and set the parking brake before you or anyone else attempts to connect or disconnect the Implement and Tractor hitches. (S3PT-15)

© 2012 Alamo Group Inc.

5.1 Connecting the Mower Tongue to the Tractor

1. Ensure the tractor is equipped with the correct PTO shaft and the drawbar is set at the correct length.
2. Using the parking jack, position the tongue clevis to the height of the tractor drawbar. Adjust the mower tongue clevis to be level and parallel with the tractor drawbar using the control rod connecting the mower tongue clevis to the deck. Shorten rod to bring clevis down and extend to angle clevis upward.
3. Board the tractor and start the engine. Back the tractor to the mower aligning the drawbar hitch hole with the mower tongue clevis. Turn off the tractor engine, place the tractor in park, and set the parking brake before dismounting.
4. To attach the mower, place two 1" flatwashers (1) positioned under top lip of tongue clevis and to the top of drawbar. Insert a 1" diameter grade 5 or 8 bolt (2) through clevis and drawbar and retain in position with a 1" locknut (3). Tighten the locknut securely but do overtighten which could spring or break the clevis. NEVER attach mower to the tractor with a pin not having a nut.
5. Securely attach the mower safety chain to the tractor drawbar or drawbar support frame.
6. Lower the jack until the tongue is completely supported by the drawbar. Remove jack from the tongue and place on storage bracket of mower.

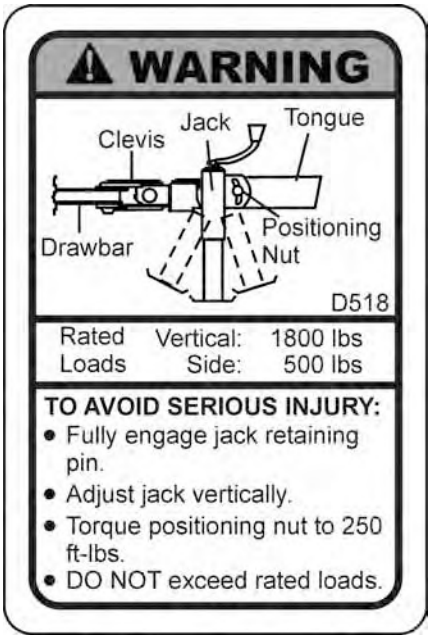

5.2 Safety Tow Chain

If the mower is towed on a public roadway, a safety chain with tensile strength equal to or greater than the gross weight of the mower must be connected between the tractor and mower. This will help control the implement in the event the tongue becomes disconnected from the drawbar. Make sure the chain is attached to a secure location on the tractor and not to an intermediate support.

After connecting both ends of the safety chain, drive the tractor to the right and left to check for proper chain length. Adjust length as necessary and allow only enough slack in the chain to make a maximum turn in both directions. When not in use, store the safety chain to protect it from mud or standing water by wrapping the chain around the tongue. Replace the safety chain if one or more links or end fittings are broken, stretched or otherwise damaged or deformed. *OPS-U-0039*

© 2012 Alamo Group Inc.

IMPORTANT: Scan this QR Code with your smart phone to link to the PAMI Safe Implement Hitching Manual for more information on correctly connecting agricultural tractors to implements. Or type in your internet browser the following web address: www.algqr.com/hme *Ops-0008-MISC*

5.3 Connecting Mower Hydraulic Lines to the Tractor

With the tractor shut down and secured in position, relieve hydraulic pressure from the tractor by moving the control levers back and forth several times or placing the levers in the float position.

When connecting the mower hydraulic lines, keep hoses, quick couplers, and swivels free of contamination. Never leave a disconnected hose end open and cap the tractor hydraulic outlet ports when not in use. If the tractor ports or mower hydraulic hose ends become contaminated, wipe clean with a rag before connecting.

Operating Mower Hydraulics with Three Tractor Hydraulic Ports

Connect one hose into each hydraulic port. Connect lines to correspond with position of hydraulic control levers.

Operating Mower Hydraulics with Two Tractor Hydraulic Ports

The lines that operate the wings must be plumbed together and will be controlled using one hydraulic control valve and the center section with the remaining control valve. Ensure that the operator is aware that each wing cannot be controlled independently nor will they raise and lower simultaneously.

Hydraulic Line Support

After connecting the mower hydraulic lines to the tractor, support the hoses with the equipped brackets. Ensure that hoses do not contact the driveline, do not bind while turning, and do not become pinched or kinked.

Hydraulic Cylinder Priming

Hydraulic Cylinders must be filled with hydraulic oil before removing the wing transport braces to lower the mower wings. Hydraulic cylinders and lines are filled by holding the valve control levers in the raised position until the cylinders fully retract (wing cylinders) and extend (center cylinder). Place control levers in the float position and repeat process a second time. Ensure wings are entirely supported by the cylinders before removing the transport bars. NEVER drive out bar pins and NEVER remove bars that have tension on them.

6. SETTING THE MOWER

Properly setting the cutting height is essential for efficient and safe operation. A properly set mower will make a more uniform cut, distribute clippings more evenly, require minimal tractor work, and follow the contour of uneven terrain. ***NOTE:*** *Avoid very low cutting heights, striking the ground with the blades gives the most damaging shock loads and will cause damage to the mower and drive. Blades contacting the ground may cause objects to be thrown out from under the mower deck. Always avoid operating the mower at a height which causes the blades to contact the ground. OPS-U- 0010*

© 2012 Alamo Group Inc.

DANGER Never work under the Implement, the framework, or any lifted component unless the Implement is securely supported or blocked up to prevent sudden or inadvertent falling which could cause serious injury or even death. (SG-14)

6.1 Setting Deck Height

LEVELING DECK CENTER SECTION

1. Place the tractor and mower on a level surface and lower both wings.
2. Use the center section hydraulic cylinder to set the mower at approximately 3/4" above the desired cutting height. The additional height is necessary so that after the mower has been leveled, the deck pitch can be set such that the front of the mower is slightly lower (1/2" to 3/4") than the rear.
3. Shut down the tractor, place the transmission in park, and set the parking brake before dismounting.

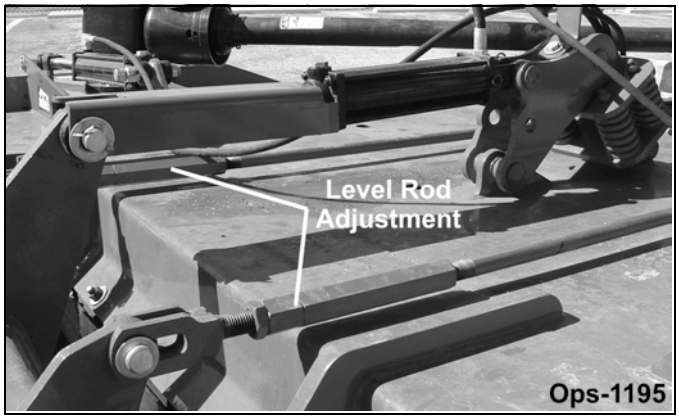

4. Level the mower deck front to rear by adjusting the leveling rods linking the tongue to the rear axle. DO NOT allow feet or other body part underneath the mower when making adjustments. To adjust rod length, loosen jamnut and screw turnbuckles. To lower the front, lengthen the rods and to raise the front, shorten the rods. DO NOT unscrew turnbuckles to the point that either rod threaded ends becomes disconnected which will cause the mower to fall. Re-tighten jamnuts when deck is leveled. IMPORTANT: Alternate adjustments between rods and adjust at equal lengths to maintain equal tension. Improper adjustments may cause rods to snap or bend.
5. Place split collar assemblies on the center axle hydraulic cylinder rod to maintain a set cutting height each time the mower is raised and lowered.
6. Once deck is leveled, recheck tongue clevis altitude to drawbar. Adjust as described in Section 6.1.

© 2012 Alamo Group Inc.

LEVELING WING SECTIONS WITH CENTER

1. To level the wing sections with the deck center, adjust the leveling screw between the wing axle and the center axle. To lower the wing, loosen the jamnut and shorten the screw assembly, lengthen the screw assembly to raise the wing. After wings are leveled, retighten jamnuts to maintain settings.

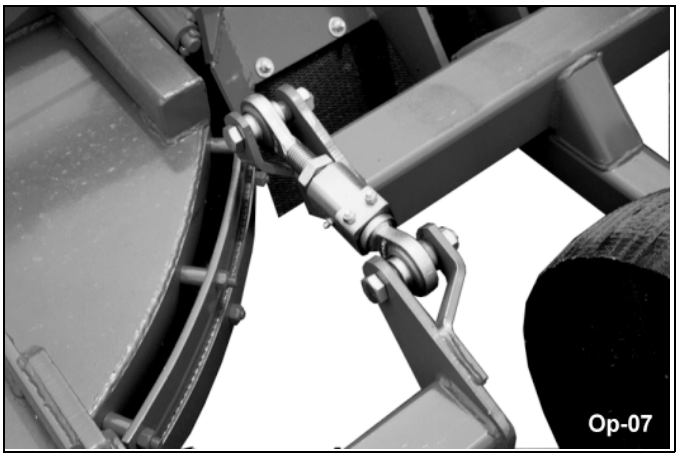

6.2 Setting Deck Pitch

Lower Horse Power - Better Fuel Efficiency

To increase fuel efficiency and lower horsepower requirements for mower operation, the mower should be operated with the deck approximately 3/4" LOWER IN THE FRONT THAN THE REAR. Operating the mower at this pitch will allow the mower to cut the grass only once and requires less work from the tractor.

Increase Mulching

To increase mulching of the grass or crop material during mower operation, the mower should be operated with the deck approximately 3/4" HIGHER IN THE FRONT THAN THE REAR.

Operating the mower at this pitch will allow the mower to cut the grass twice and can result in a more even cut and improved distribution of the cut material.

IMPORTANT:

Adjust the leveling rods the same amount and maintain equal tension in the rods. Improper adjustment may cause rods to snap or bend. Retighten the jamnuts after the deck pitch has been set. OPS-U-0041

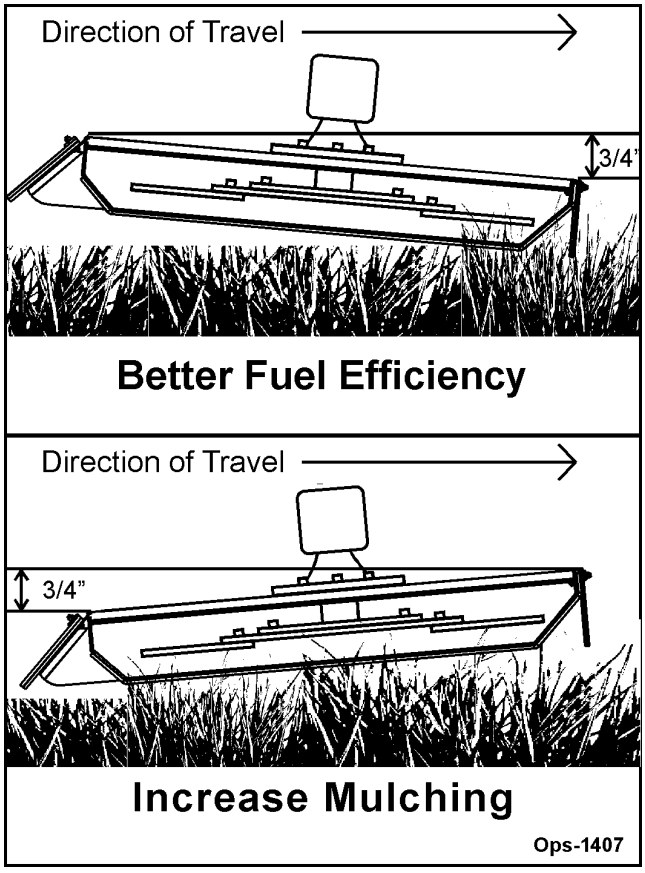

© 2012 Alamo Group Inc.

7. DRIVELINE ATTACHMENT

The driveline yoke and tractor PTO shaft must be dirt free and greased for attachment.

To connect the mower driveline to the tractor PTO output shaft, pull the driveline yoke collar back and align the grooves and splines of the yoke with those of the PTO shaft. Push the driveline yoke onto the PTO shaft, release the locking collar, and position the yoke until the locking collar balls are seated onto the PTO shaft. Push and pull the driveline back and forth several times to ensure a secure attachment. *OPS-R-0003_I*

WARNING When attaching the Implement input driveline to the Tractor PTO, it is important that the connecting yoke spring activated locking collar slides freely and the locking balls are seated securely in the groove on the Tractor PTO shaft. Push and pull the driveline back and forth several times to ensure it is securely attached. A driveline not attached correctly to the Tractor PTO shaft could come loose and result in personal injury and damage to the Implement. (S3PT-17)

7.1 Driveline Length Check

WARNING Before operating the Implement, check to make sure the Implement input driveline will not bottom out or become disengaged. Bottoming out occurs when the inner shaft penetrates the outer housing until the assembly becomes solid-it can shorten no more. Bottoming out can cause serious damage to the Tractor PTO by pushing the PTO into the Tractor and through the support bearings or downward onto the PTO shaft, breaking it off. A broken driveline can cause personal injury. (S3PT-18)

When fitting the mower to the tractor, the telescoping driveline must be inspected to ensure that at its most compressed position, the profiles do not “bottom out”, and when at its farthest extended position, there is sufficient engagement between the profiles to operate safely. At its shortest length, there must be at least a 1” clearance between each profile end and opposite profile universal joint. At its farthest operating extension, a minimum profile engagement of 12” must be maintained.

© 2012 Alamo Group Inc.

"Bottoming Out" Check Procedure

- Disconnect driveline from the tractor and slide the profiles together until fully compressed.
- Place a mark on the inner shield 1/8" from the end of the outer shield and reattach the driveline to the PTO shaft.
- With the ***PTO NOT TURNING***, slowly drive the tractor with mower attached through the sharpest turn possible and watch shaft movement. With the ***PTO NOT TURNING***, slowly drive the tractor with the mower attached through the most severe terrain conditions expected and watch shaft movement.
- If the distance between the mark and the outer shield becomes less than 2" at any point there is a potential problem bottoming out the driveline and the driveline should be replaced with shorter driveline. Contact your local dealer or Technical Service for proper directions. *OPS-R-0004_J*

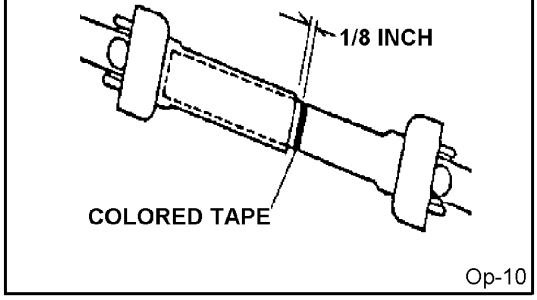

Driveline in maximum compressed position

NOTE: *If tractor has a 540 RPM PTO, adjusting drawbar to 16 inch position, it will gain an additional 2 inches of telescoping length.*

Engagement Check Procedure

- With the driveline attached, position the mower to the point where the telescoping driveline is at its maximum extension. Completely shut down the tractor and secure in position.
- Mark the inner driveline shield 1/8" from the end of the outer shield.
- Disconnect the driveline from the tractor and separate the two driveline halves.
- Measure the distance from the mark to the end of the inner profile. This length is the amount the driveline profiles were engaged.
- If the engaged length is less than 12" the shaft is considered too short and should be replaced with a longer shaft. Consult an authorized dealer to purchase the required driveline length.

NOTE: *If the driveline cannot be shortened and still maintain the required profile engagement, the operator must be made aware of terrain conditions and avoid situations which pose a potential problem to avoid damaging the driveline or move drawbar to 16" or 20" position for required clearance.*

⚠ CAUTION The Constant Velocity PTO driveline is **HEAVY** (70 lbs or greater) and Special Lifting Procedures are recommended. Use lifting assistance such as mechanical assistance, two people, and proper lifting techniques when connecting or installing the driveshaft to reduce the possibility of back injuries.

8. PRE-OPERATION INSPECTION AND SERVICE

Before each use, a pre-operation inspection and service of the implement and tractor must be performed. This includes routine maintenance and scheduled lubrication, inspecting that all safety devices are equipped and functional, and performing needed repairs. DO NOT operate the unit if the pre-operation inspection reveals any condition affecting safe operation. Perform repairs and replacement of damaged and missing parts as soon as noticed. By performing a thorough pre-operation inspection and service, valuable down time and repair cost can be avoided. *OPS-U-0029*

© 2012 Alamo Group Inc.

DANGER Always disconnect the main PTO Driveline from the Tractor before performing service on the Implement. Never work on the Implement with the tractor PTO driveline connected and running. Rotating Parts, Blades or Drivelines could turn without warning and cause immediate entanglement, injury or death. (S3PT-11)

WARNING Periodically inspect all moving parts for wear and replace when necessary with authorized service parts. Look for loose fasteners, worn or broken parts, and leaky or loose fittings. Make sure all pins have cotter pins and washers. Serious injury may occur from not maintaining this machine in good working order. (SG-21)

WARNING

Non-genuine parts can fail catastrophically.
TO AVOID SERIOUS INJURY OR DEATH:

- ONLY use genuine Bush Hog replacement parts.
- Non-genuine parts can fail creating hazardous conditions for operator and bystanders.

Contact local dealer or Bush Hog about repair parts at:

2501 Griffin Ave.,Selma, Al 36701
Customer Service: 800-363-6096.
Email: contactus@bushhog.com www.algqr.com/bpm

D559_1

IMPORTANT

BE AWARE
BE ALERT
BE ALIVE

BE TRAINED
Before Operating this Mower

www.algqr.com/bve

To prevent serious injury to yourself and/or bystanders, be trained in Safe Mowing Practices. Alamo Group Companies as well as AEM and FEMA provide training material that is critical for your Safety and the Safety of others when operating this equipment. Make these Safety Procedures an important part of every workday. Read and understand the Operator's Manual. Do not let untrained individuals operate this equipment. Contact your Dealer, AEM (www.aem.org), FEMA (314-878-2304, www.FarmEquip.org), or Alamo Group (www.Alamo-Group.com) for information on training material or courses that provide training in Safer Operating Practices for Mowers. D559_2

D559

© 2012 Alamo Group Inc.

8.1 Tractor Pre-Operation Inspection/Service

Refer to the tractor operator's manual to ensure a complete pre-operation inspection and scheduled service is performed according to the manufacturers recommendations. The following are some of the items that require daily service and inspection:

- Tire condition/air pressure
- Wheel lug bolts
- Steering linkage
- PTO shield
- SMV sign is clean and visible
- Tractor's lights are clean and functional
- Tractor Seat belt is in good condition
- Tractor ROPS is in good condition
- ROPS is in the raised position
- No tractor oil leaks
- Radiator free of debris
- Engine oil level and condition
- Engine coolant level and condition
- Power brake fluid level
- Power steering fluid level
- Fuel condition and level
- Sufficient lubrication at all lube points
- Air filter condition *OPS-U-0030*

8.2 Mower Pre-Operation Inspection/Service

Before each mower use, a complete inspection and service is required to ensure the mower is in a good and safe working condition. Damaged and/or broken parts should be repaired and/or replaced immediately. To ensure the mower is ready for operation, conduct the following. *OPS-R-0007*

The operator's manual and safety signs affixed on the unit contain important instructions on the safe and proper use of the equipment. Maintain these important safety features on the implement in good condition to ensure the information is available to the operator at all times.

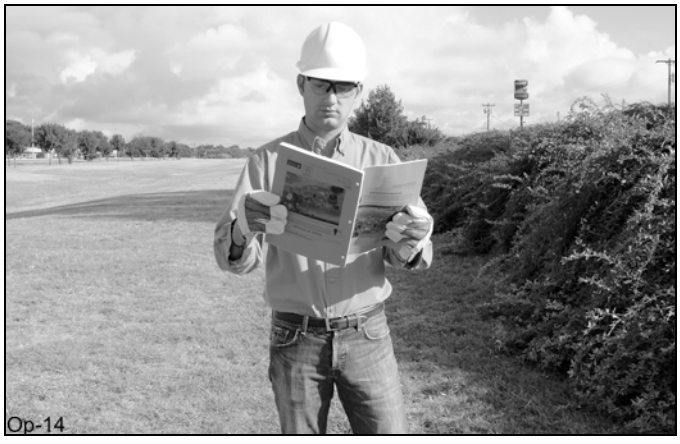

- Ensure the manual canister is secured to the equipment with the operator's manual inside.
- Ensure all safety signs are in place and legible. Replace missing, damaged, and illegible decals. *OPS-U- 0011*

© 2012 Alamo Group Inc.

- Ensure the mower hitch is securely attached to the tractor drawbar with a proper size bolt and secured nut.
- Ensure that a properly rated safety tow chain is equipped securing the mower to the tractor.
- Check that the main driveline is securely attached to the tractor and the clamping cone is seated in the groove of the PTO shaft.
- Ensure the divider drivelines are secure at both ends. *OPS-R-0008*

- Ensure chain guards and/or rubber deflectors are in position and not damaged. Replace worn, broken, and missing sections immediately.
- Ensure the driveline integral shields are in good condition and rotate freely.
- Inspect that all bolts and screws are in position and are properly torqued. *OPS-R-0009*

⚠ DANGER

All Safety Shields, Guards and Safety devices including (but not limited to) - the Deflectors, Chain Guards, Steel Guards, Gearbox Shields, PTO integral shields, and Retractable Door Shields should be used and maintained in good working condition. All safety devices should be inspected carefully at least daily for missing or broken components. Missing, broken, or worn items must be replaced at once to reduce the possibility of injury or death from thrown objects, entanglement, or blade contact. (SGM-3)

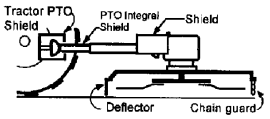

© 2012 Alamo Group Inc.

OPERATION

- Ensure the tractor PTO master shield is in place, lowered and in good condition.
- Ensure each mower slip clutch shield is secured in place and in good condition.
- Ensure the driveline slip clutches are properly adjusted and the friction plates are not frozen together. Reference the Maintenance Section for proper slip clutch maintenance. *OPS-R-0010_F*

- Inspect the gearbox oil level. A low oil level is a warning sign that the gearbox may be cracked or its seal is damaged and needs replacement.
- Ensure the gearbox vent is in place and free from clogs. *OPS-R-0040*

- Inspect blades and blade bolts for looseness and excessive wear. Make sure the mower is securely blocked up before crawling beneath. Replace damaged, worn, and missing blades as complete sets to maintain rotary balance.
- Ensure carrier hub nuts are tightened with the cotter pin inserted and spread.
- Inspect the condition of the deck skid shoes and the skid shoe attaching hardware. *OPS-R-0012*

© 2012 Alamo Group Inc.

- Ensure each hydraulic cylinder is installed and retained correctly. Ensure the proper size pins are used to retain the cylinders in place and are secured with pins.
- Check for hydraulic oil leaks on the cylinders, along the hydraulic lines, and at tractor hydraulic ports.**IMPORTANT**: DO NOT use your hands to check for oil leaks. Use a piece of heavy paper or cardboard to check for hydraulic oil leaks. *OPS-R-0013_H*

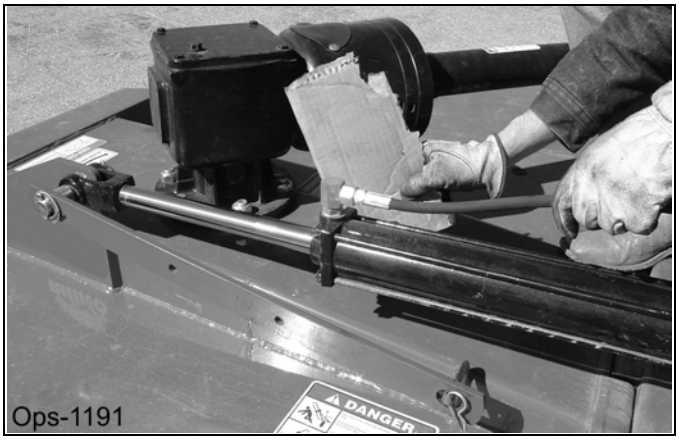

Ops-1191

- Ensure that the mower is equipped and secured with wing brace supports.
- Check the condition of the wing hinge pins.
- Check the condition of the mower axle suspension spring.
- Inspect mower tire condition, wheel bearings, and lug nut torque. *OPS-R-0014_D*

Ops-1194

© 2012 Alamo Group Inc.

8.3 Cutting Component Inspection

Inspect blade pan and blade assembly for the following:

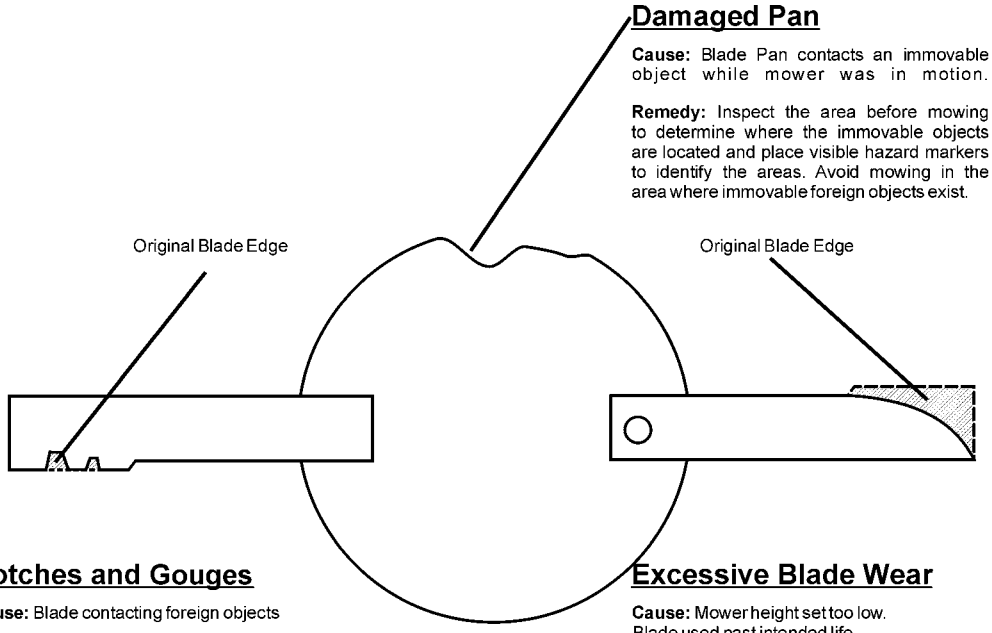

OPS-U-0031

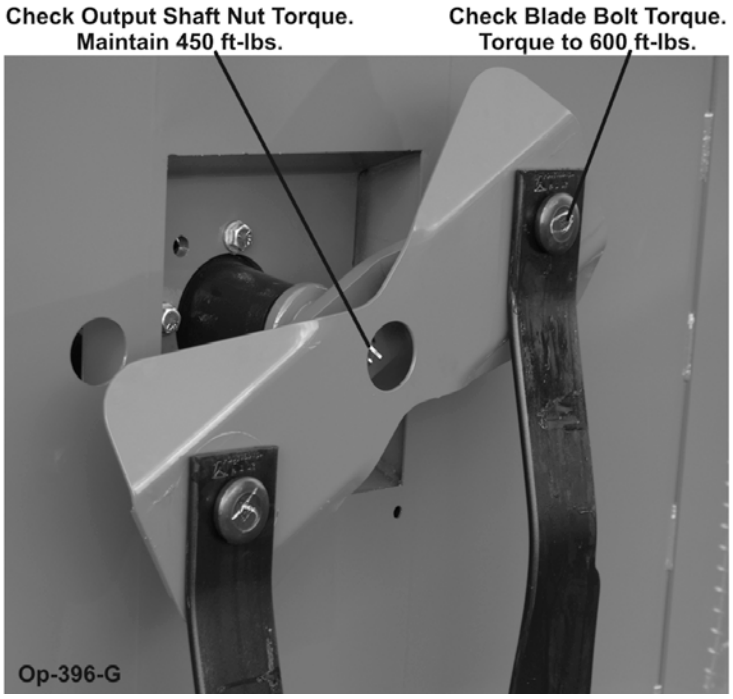

© 2012 Alamo Group Inc.

WARNING Operating the mower with loose blade hardware will damage the blade holder or blades and can result in blade breakage or blade fastener failure. Broken blades or bolts can be thrown out from under the mower for distances up to 300 feet. When the blades are replaced, the fastening hardware must be replaced. Check and retighten the blade hardware after the first eight hours of operation. In severe cutting conditions, recheck the blade carrier and blade bolt torque every 50 hours.

Important To help prevent structural damage caused by loose hardware, tighten gearbox mounting hardware as specified. Check the fastener torque after first 8 hours of use and every 50 hours thereafter.

DANGER Inspect the Blades daily for abnormal wear. REPLACE BOTH BLADES on that carrier IMMEDIATELY if either blade has:

- Become bent or deformed from it's original shape or
- Any cracks are visible, or
- Deep gouges in the blade's surface are present, or
- Gouges or chipped areas in the cutting edge are larger than 1/2"(12.7mm), or
- The material on the leading edge has been worn away by more than 1/2(12.7mm)"

Failure to replace abnormally worn blades may lead to catastrophic failure of the blades and ejection of the broken part with tremendous force which may cause serious bodily injury or death. *OPS-U-0032*

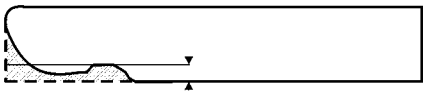

© 2012 Alamo Group Inc.

8.4 Blade Bolt Inspection

Inspect Blade Bolt Head daily for wear as followed:

Excessive Blade Bolt Wear

Cause: Blade Bolt contacts a foreign or solid object while Blade is in motion.

Remedy: Inspect the area before mowing to determine where the foreign objects are located and place visible hazard markers to identify the areas where immovable foreign objects exist, and avoid hitting the objects.

Notches and Gouges

Cause: Blade Bolt contacting foreign objects.

Remedy: Inspect area to be mowed and remove foreign objects that could cause damage to the blade bolt.

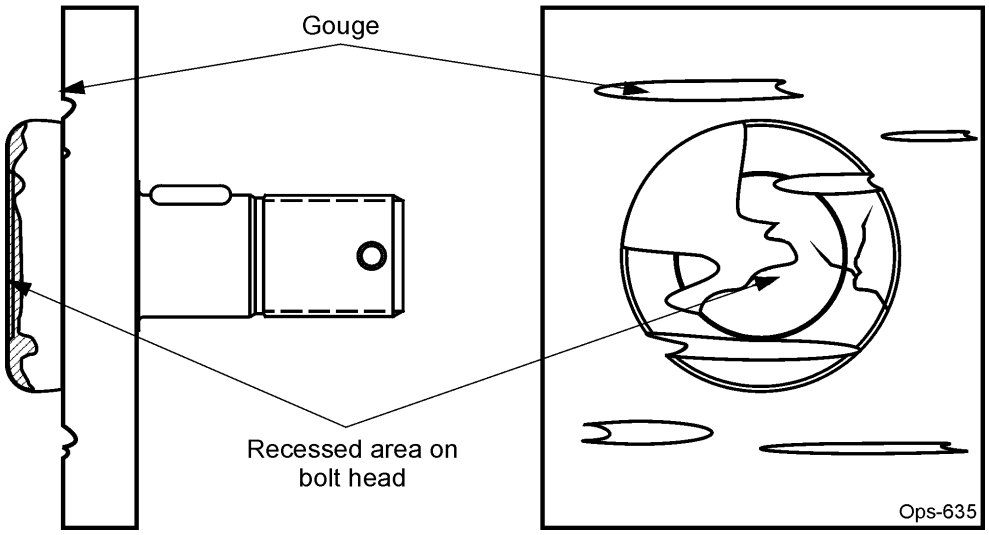

⚠ DANGER **Inspect the Blade Bolt Heads daily for abnormal wear. REPLACE BOTH BLADE BOLTS on the Blades IMMEDIATELY if either blade bolts has:**

- Visible cracks or
- If the recessed area on blade bolt is worn off or
- If Blade Bolt has gouges or chipped areas.

Failure to replace abnormally worn blade bolts may lead to catastrophic failure of the blades and ejection of the broken part which may cause serious bodily injury or death.

Always replace Blade Bolts with new bolts whenever replacing the Blades. *OPS-U-0037*

© 2012 Alamo Group Inc.

Rotary Mower PRE-OPERATION Inspection

BUSH HOG®

Mower ID#_____

Date: _____

IMPORTANT: Scan this QR Code for an electronic copy of this inspection sheet.

www.algqr.com/rmi

⚠WARNING **Before conducting the inspection, make sure the tractor engine is off, all rotation has stopped and the tractor is in park with the parking brake engaged. Make sure the mower is resting on the ground or securely blocked up and all hydraulic pressure has been relieved.**

Item	Condition at Start of Shift	Specific Comments if not O.K.
The Operator's Manual is in the canister on the mower		
All safety decals are in place and legible		
The tongue/hitch connection bolts & pins are tight		
There are no cracks in tongue or hitch		
The tow chain is secured to the tractor & mower		
The hydraulic cylinders pins are tight		
There are no leaking or damaged hoses		
The mower deck is clear of cut grass and debris		
Chain guards/deflectors are in place & in good condition		
Driveline/gearbox shields are in good condition		
Driveline clutches are in good condition; not frozen		
Driveline telescoping members & U-joints are lubricated		
Driveline yokes are securely attached to PTO & mower		
Gearbox mounting bolts are tight		
Gearbox oil is at the proper level		
Blade carrier retaining nut is tight		
Blades are not chipped, cracked or bent		
Blade bolts are tight		
Wheel lug nuts are tight		
Transport locks are in good condition		

Make_____ Shift _____

Operator's Signature: _____

DO NOT OPERATE an UNSAFE TRACTOR or MOWER

© 2012 Alamo Group Inc.

OPERATION

Tractor PRE-OPERATION Inspection

BUSH HOG®

Tractor ID#:_____Make:_____

Date:_____Shift:_____

WARNING **Before conducting the inspection, make sure the tractor engine is off, all rotation has stopped and the tractor is in park with the parking brake engaged. Make sure the implement is resting on the ground or securely blocked up and all hydraulic pressure has been relieved.**

Item	Condition at Start of Shift	Specific Comments if not O.K.
The flashing lights function properly		
The SMV Sign is clean and visible		
The tires are in good condition with proper pressure		
The wheel lug bolts are tight		
The tractor brakes are in good condition		
The steering linkage is in good condition		
There are no visible oil leaks		
The hydraulic controls function properly		
The ROPS or ROBS Cab is in good condition		
The seatbelt is in place and in good condition		
The 3-point hitch is in good condition		
The drawbar pins are securely in place		
The PTO master shield is in place		
The engine oil level is full		
The brake fluid level is full		
The power steering fluid level is full		
The fuel level is adequate		
The engine coolant fluid level is full		
The radiator is free of debris		
The air filter is in good condition		

Operator's Signature:_____

DO NOT OPERATE an UNSAFE TRACTOR or IMPLEMENT

© 2012 Alamo Group Inc.

9. DRIVING THE TRACTOR AND IMPLEMENT

Safe tractor transport requires the operator possess a thorough knowledge of the model being operated and precautions to take while driving with an attached implement. Ensure the tractor has the capacity to handle the weight of the implement and the tractor operating controls are set for safe transport. To ensure safety while driving the tractor with an attached implement, review the following. *OPS-U- 0012*

⚠ DANGER Never run the Tractor engine in a closed building or without adequate ventilation. The exhaust fumes can be hazardous to your health. (SG-23)

⚠ WARNING Transport only at speeds where you can maintain control of the equipment. Serious accidents and injuries can result from operating this equipment at high speeds. Understand the Tractor and Implement and how it handles before transporting on streets and highways. Make sure the Tractor steering and brakes are in good condition and operate properly.

Before transporting the Tractor and Implement, determine the proper transport speeds for you and the equipment. Make sure you abide by the following rules:

Test the tractor at a slow speed and increase the speed slowly. Apply the Brakes smoothly to determine the stopping characteristics of the Tractor and Implement. As you increase the speed of the Tractor the stopping distance increases. Determine the maximum transport speed not to exceed 20 mph (30 kph) for transporting this equipment.

Test the equipment at a slow speed in turns. Increase the speed through the turn only after you determine that the equipment can be operated at a higher speed. Use extreme care and reduce your speed when turning sharply to prevent the tractor and implement from turning over. Determine the maximum turning speed for you and this equipment before operating on roads or uneven ground.

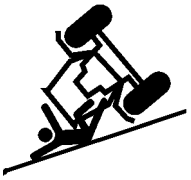

Only transport the Tractor and Implement at the speeds which allow you to properly control the equipment.

Be aware of the operating conditions. Do not operate the Tractor with weak or faulty brakes or worn tires. When operating down a hill or on wet or rain slick roads, the braking distance increases: use extreme care and reduce your speed. When operating in traffic always use the Tractor's flashing warning lights and reduce your speed. Be aware of traffic around you and watch out for the other guy. (SG-19)

© 2012 Alamo Group Inc.

OPERATION

9.1 Starting the Tractor

The procedure to start the tractor is model specific. Refer to the tractor operator's manual for starting procedures for your particular tractor. Consult an authorized dealer if the starting procedure is unclear. Ensure the 3-point control lever is in the lowered position and the PTO is disengaged before starting the tractor. *OPS-U-0033*

Op-24

9.2 Brake and Differential Lock Setting

Make sure the tractor brakes are in good operating condition. Tractor brakes can be set to operate independently allowing single rear wheel braking action or locked together to provide simultaneous rear wheel braking. FOR MOST DRIVING AND OPERATING CONDITIONS, THE BRAKE PEDALS SHOULD BE LOCKED TOGETHER TO PROVIDE THE MOST EFFECTIVE BRAKING ACTION.

Always disengage the tractor differential lock when turning. When engaged the differential lock will prevent or limit the tractor from turning. During normal cutting conditions, locking the differential provides no benefit and should not be used. *OPS-U- 0013*

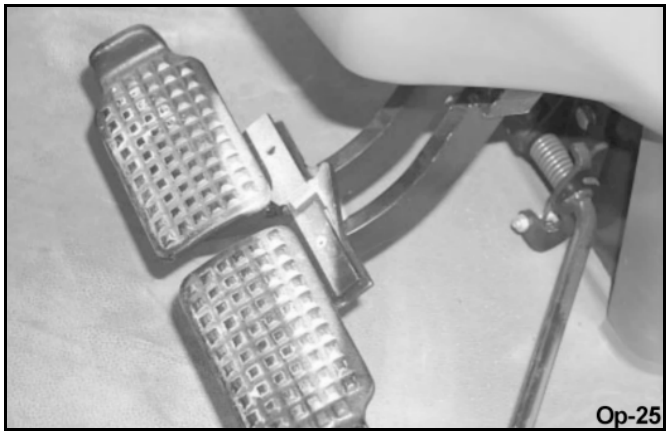
Op-25

⚠WARNING Be aware of the operating conditions. Do not operate the Tractor with weak or faulty brakes. When operating down a hill or on wet or rain slick roads, the braking distance increases; use extreme care and reduce your speed in these conditions. When operating in traffic, always use the Tractor's flashing warning lights and reduce your speed. Be aware of traffic around you and watch out for the other guy.

9.3 Operating the Mower Wings

Wings are positioned with hydraulic cylinders. It is recommended that the tractor be equipped with three hydraulic ports or a 3-spool control valve be used so that each section can be controlled independently. Ensure the hydraulic cylinders and lines are filled with oil by holding the valve control levers in the raised position until the cylinders fully retract (wings) and extend (center). Only operate the mower with both wings fully lowered, NEVER operate the mower with a raised wing. Wait until the blades are at a complete stop before raising wings. *OPS-R-0015*

© 2012 Alamo Group Inc.

9.4 Transport Position

To raise mower wings, drive the unit to a level area and retract the wing hydraulic cylinders. DO NOT raise wings with the mower positioned on an embankment or other inclined position to prevent overturning the mower. After the wings are fully raised, install transport lock braces to prevent wings from inadvertently falling. ***NOTE:*** *If the transport lock braces can not be easily installed, lower the mower wings and remove rod end of cylinder and adjust the rod clevis in or out to match the transport brace length.*

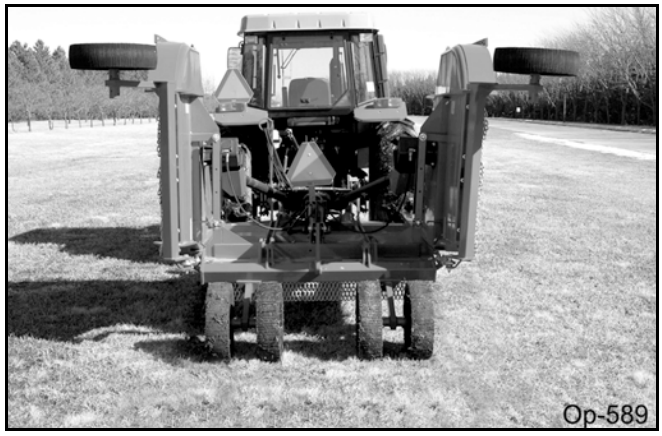
Op-589

The center of gravity is raised and the mower more prone to tipping when the wings are in the raised position. When transporting, raise the center section high enough to clear ground obstacles. *OPS-R-0016*

9.5 Operating Position

To lower the wings, remove the transport lock braces and secure braces on storage bracket. DO NOT drive out transport brace pins. The wing cylinder may need to be retracted to remove tension for brace removal. After removing brace bars, extend wing hydraulic cylinders and fully lower wings.

Op-590

The valves operating wing cylinders should be placed in the float position while mowing to allow the mower to follow the contour of uneven terrain and to prevent the wings from creeping up. When extending a wing over a ditch for mowing, place the control valve lever detents in the center position. This will give the mower more stability and prevent the opposite wing from raising. DO NOT operate the mower with the valves in the detent position for extended periods of time to prevent deck frame damage. *OPS-R-0017*

© 2012 Alamo Group Inc.

9.6 Driving the Tractor and Cutter

Start off driving at a slow speed and gradually increase your speed while maintaining complete control of the tractor and mower. Moving slowly at first will also prevent the tractor from rearing up and loss of steering control. The tractor should never be operated at speeds that cannot be safely handled or which will prevent the operator from stopping quickly during an emergency. If the power steering or engine ceases operating, stop the tractor immediately as the tractor will be difficult to control.

Drive the tractor with the 3-Point lift arms in the raised position and lock the control lever in the transport detent position to prevent damage to the mower driveline and tongue when turning.

Perform turns with the tractor and mower at slow speeds to determine how the tractor with an attached mower handles a turn. Determine the safe speed to maintain proper control of the tractor when making turns. When turning with a towed implement, the overall working length of the unit is increased. Allow additional clearance for the mower when turning..

Op-28

To avoid overturns, drive the tractor with care and at safe speeds, especially when operating over rough ground, crossing ditches or slopes, and turning corners. Tractor wheel tread spacing should be increased when working on inclines or rough ground to reduce the possibility of tipping.

Use extreme caution when operating on steep slopes. Keep the tractor in a low gear when going downhill. DO NOT coast or free-wheel downhill. *OPS-R-0018*

Op-29

© 2012 Alamo Group Inc.

9.7 Crossing Ditches and Steep Inclines

When crossing ditches with steep banks or going up sharp inclines, it is possible that the main driveline inner profile will penetrate into the outer housing to its maximum depth until the assembly becomes solid (driveline is at its extreme shortest length). This type of abusive operation can cause serious damage to the tractor and mower drive by pushing the PTO into the tractor and through the support bearings or downward onto the PTO shaft, breaking it off.

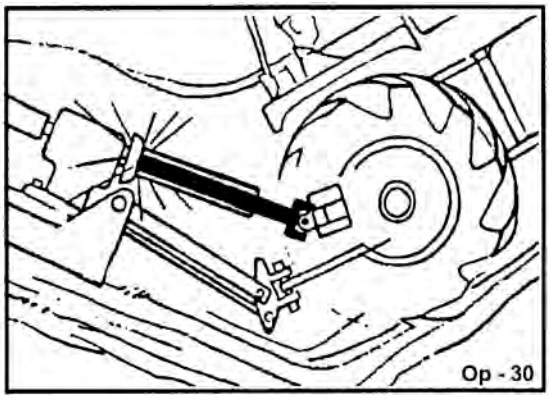

⚠WARNING Damage resulting from over-collapse of the driveline's inner profile and its outer housing may allow the driveline to come loose from the Tractor which could cause bodily injury to the operator or bystanders and/or extensive damage to the Tractor or Implement. *OPS-R-0020*

NOTE: *See Driveline Length Check and "Bottoming Out" Check Procedure.*

When confronted with an incline or ditch, do not approach from an angle which is perpendicular or straight on as damaged to over collapse of the driveline may occur.

When crossing such terrain, the implement should be fully lowered for a lower center of gravity and added stability. *OPS-R-0021*

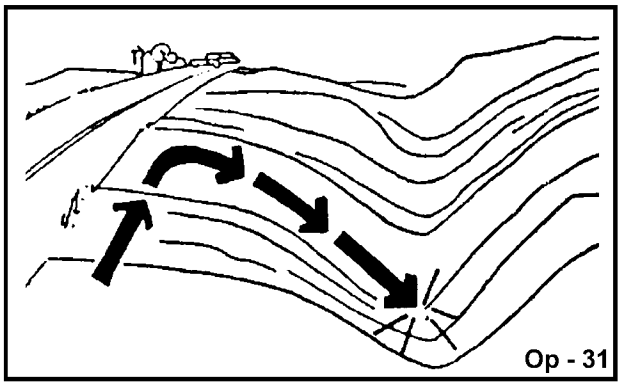

INCORRECT: DO NOT approach ditch straight on

© 2012 Alamo Group Inc.

Inclines and ditches should be approached along a line which is at an angle as shown. This type of path will reduce the possibility of over-collapse of the driveline and resulting damage. If the gradient is so steep that such an approach increases the possibility of a tractor roll-over, select an alternate crossing path.

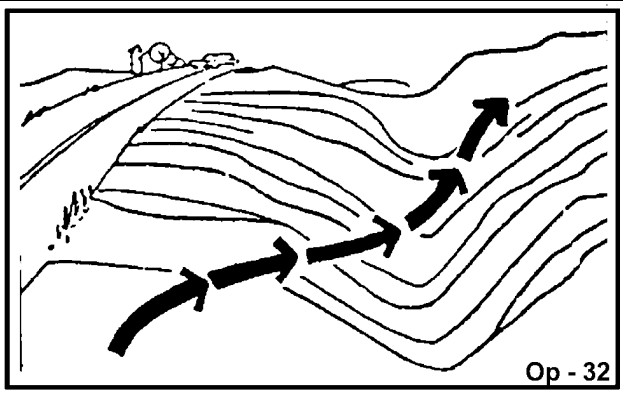

CORRECT: Approach ditch at an angle

When operating the tractor and mower across slopes and inclines, through ditches, and other uneven terrain conditions, it is important to maintain sufficient deck to ground clearance. Blade contact with the ground may cause soil, rocks and other debris to be thrown out from under the mower resulting in possible injury and/or property damage. Ground contact also produces a severe shock load on the mower drive and to the mower blades resulting in possible damage and premature wear. *OPS-R-0022*

10. OPERATING THE TRACTOR AND IMPLEMENT

THE OPERATOR MUST COMPLETELY UNDERSTAND HOW TO OPERATE THE TRACTOR AND IMPLEMENT AND ALL CONTROLS BEFORE ATTEMPTING TO OPERATE. The operator must read and understand the Safety and Operation Sections of the implement and tractor operator's manuals. These manuals must be read and explained to any operator who cannot read. Never allow someone to operate the implement and tractor without complete operating instructions.

Before starting any operation, the operator must become familiar with the area to be worked in and any obstacles and hazards contained within to ensure safety to the operator, bystanders, and equipment. Special attention should be paid to foreign debris, rough terrain, steep slopes, and passersby and animals in the area. *OPS-U- 0015*

⚠WARNING Extreme care should be taken when operating near loose objects such as gravel, rocks, wire, and other debris. Inspect the area before mowing. Foreign objects should be removed from the site to prevent machine damage and/or bodily injury or even death. Any objects that cannot be removed must be clearly marked and carefully avoided by the operator. Stop mowing immediately if blades strike a foreign object. Repair all damage and make certain rotor or blade carrier is balanced before resuming mowing. (SGM-05)

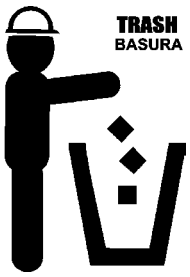

© 2012 Alamo Group Inc.

WARNING Many varied objects, such as wire, cable, rope, or chains, can become entangled in the operating parts of the mower head. These items could then swing outside the housing at greater velocities than the blades. Such a situation is extremely hazardous and could result in serious injury or even death. Inspect the cutting area for such objects before mowing. Remove any like object from the site. Never allow the cutting blades to contact such items. (SGM-06)

10.1 Foreign Debris Hazards

Before mowing, inspect the area to make sure there are no foreign objects that the mower blades could hit or become entangled with. Remove all foreign objects and debris. If objects are too big to remove, mark them clearly and be sure to prevent the mower blades from contacting them.

If you hit a solid object or foreign debris, stop the mower and tractor at once. Immediately idle the engine speed and disengage the PTO. Wait for all mower rotating motion to stop, then raise the mower and move the tractor and implement off the object. Inspect the area and remove, or mark the location of the debris. Inspect the condition of the mower and make any needed repairs immediately. Make sure the blades are not damaged and the carrier is balanced before resuming operation.

Remove Foreign Material

Always wear your seat belt securely fastened and only operate the tractor and mower with the ROPS in the raised position. If the tractor or mower hits a tree stump, rock, or bump, a sudden movement could throw you off of the seat and under the tractor and/or mower. The seat belt is your best protection from falling off the tractor and the ROPS provides protection from being crushed during a tractor roll-over. *OPS-R-0023*

Raise Mower over solid objects

10.2 Bystanders/Passersby Precautions

If a bystander comes within 300 feet of the tractor while the mower is being operated, stop the tractor at once, idle the engine and disengage the PTO. Do not engage the PTO again until all bystanders are well past the 300 foot distance. *OPS-R-0024*

© 2012 Alamo Group Inc.

⚠ DANGER Rotary Mowers are capable under adverse conditions of throwing objects for great distances (300 ft (100 m) or more) and causing serious injury or death. Follow safety messages carefully.

STOP MOWING IF PASSERSBY ARE WITHIN 300 Feet (100 m) UNLESS:

-Front and Rear Deflectors, Chain Guards, or Bands are installed and in good, workable condition;

-Mower sections or Wings are running close to and parallel to the ground without exposed Blades;

-Passersby are outside the existing thrown-object zone;

-All areas have been thoroughly inspected and all foreign material such as rocks, cans, glass, and general debris has been removed.

NOTE: *Where there are grass and weeds high enough to hide debris that could be struck by the blades, the area should be: inspected and large debris removed, mowed at an intermediate height, inspected, closely with any remaining debris being removed, and mowed again at desired final height. (This will also reduce power required to mow, reduce wear and tear on the Mower drivetrain, spread cut material better, reduce streaking, and make the final cut more uniform).* (SRM-01)

10.3 Engaging the Power Take Off (PTO)

Before engaging the PTO, make certain that the area is clear of bystanders and passersby. The implement must be completely lowered and the deck positioned at a safe operating height. NEVER engage the PTO with the implement in the raised position.

Set the tractor engine speed at approximately 1,000 RPM before engaging the PTO. Shift the PTO control to the on position, and slowly increase the engine speed until the PTO is operating at the rated speed. If you hear unusual noises or see or feel abnormal vibrations, disengage the PTO immediately. Inspect the implement to determine the cause of the noise or vibration and repair the abnormality. *OPS-U- 0027*

⚠ WARNING Do not let the Blades turn when the Mower Deck is raised for any reason, including clearance or for turning. Raising the Mower deck exposes the Cutting Blades which creates a potentially serious hazard and could cause serious injury or even death from objects thrown from the Blades. (SRM-07)

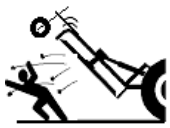

⚠ WARNING Do not put hands or feet under mower decks. Blade Contact can result in serious injury or even death. Stay away until all motion has stopped and the decks are securely blocked up. (SGM-09)

© 2012 Alamo Group Inc.

10.4 PTO RPM and Ground Speed

Ground speed for mowing will depend upon the height, type, and density of vegetation to be cut. Recommended speed for efficient mower performance is between 2 and 5 mph(3-8 kph). Operate the mower at its full rated PTO speed to maintain blade speed for a clean cut. Refer to the tractor operator's manual or the tractor instrument panel for the engine speed and gear to provide the required PTO and desired ground speed. Make sure that the mower is operating at its full rated speed before entering the vegetation to be cut. If it becomes necessary to temporarily regulate engine speed, increase or decrease the throttle gradually.

Ground speed is achieved by transmission gear selection and not by the engine operating speed. The operator may be required to experiment with several gear range combinations to determine the best gear and range which provides the most ideal performance from the mower and most efficient tractor operation. As the severity of cutting conditions increase, the ground speed should be decreased by selecting a lower gear to maintain the proper operating PTO speed. *OPS-R-0025*

⚠WARNING Do not exceed the rated PTO speed for the Implement. Excessive PTO speeds can cause Implement driveline or blade failures resulting in serious injury or death. (SG-26)

⚠WARNING Mow at the speed that you can safely operate and control the tractor and mower. The correct mowing speed depends on terrain condition and grass type, density, and height of cut. Normal ground speed range is from 2 to 5 mph(3-8 kph). Use slow mowing speeds when operating on or near steep slopes, ditches, drop-offs, overhead obstructions, power lines, or when debris and foreign objects are to be avoided. (SGM-07)

10.5 Operating the Mower

Only operate the mower from the tractor operator's seat with the seatbelt securely fastened. The tractor must be equipped with a ROPS in the raised position or a ROPS cab.

The mower is designed to cut vegetation up to 1-1/2" (38mm) in diameter. Sharp blades will produce a cleaner cut and require less power. Travel at a speed that allows the mower sufficient time to cut through the vegetation and maintain the PTO operating speed to prevent overloading the mower and tractor. Choose a driving pattern that provides the maximum pass length and minimizes turning.

Under certain conditions, tractor tires may roll some grasses down preventing them from being cut at the same height as the surrounding area. When this occurs, reduce the tractor ground speed while maintaining the operating speed of the mower. A slower ground speed will permit grasses to at least partially rebound and be cut. Taking a partial cut and/or reversing the direction of travel may also help produce a cleaner cut.

Avoid mowing in the reverse direction when possible. In situations where the mower must be backed to access areas to be cut, make sure there are no persons or other foreign debris behind the mower before mowing in reverse. When mowing in reverse, operate the tractor and mower at a reduced ground speed to ensure tractor and mower control is maintained. *OPS-R-0026*

© 2012 Alamo Group Inc.

OPERATION

⚠WARNING Do not mow with two machines in the same area except with Cab tractors with the windows closed. (SGM-11)

⚠WARNING Mow only in conditions where you have clear visibility in daylight or with adequate artificial lighting. Never mow in darkness or foggy conditions where you cannot clearly see at least 300 feet (90 m) in front and to the sides of the tractor and mower. Make sure that you can clearly see and identify passersby, steep slopes, ditches, drop-offs, overhead obstructions, power lines, debris and foreign objects. If you are unable to clearly see these type of items discontinue mowing. (SGM-1)

⚠WARNING Avoid mowing in reverse direction when possible. Check to make sure there are no persons behind the mower and use extreme care when maneuvering in reverse. Mow only at a slow ground speed where you can safely operate and control the tractor and mower. Never mow an area that you have not inspected and removed debris or foreign material. (SGM-08)

⚠WARNING Follow these guidelines to reduce the risk of equipment and grass fires while operating, servicing, and repairing the Mower and Tractor:

-Equip the Tractor with a fire extinguisher in an accesible location.

-Do Not operate the Mower on a Tractor with an underframe exhaust.

-Do Not smoke or have an open flame near the Mower and Tractor.

-Do Not drive into burning debris or freshly burnt areas.

-Ensure slip clutches are properly adjusted to prevent excessive slippage and plate heating.

-Never allow clippings or debris to collect near drivelines, slip clutches, and gearboxes. Periodically shut down the Tractor and Mower and clean clippings and collected debris from the mower deck. (SGM-12)

When you get to the end of a pass, slightly raise the mower (2-4") before turning. Never raise the mower entirely while the blades are turning and **NEVER** raise the mower wings while the blades are turning.

Mower is equipped with a constant velocity driveline which can operate in conditions that require frequent sharp turns. CV joints enable the tractor PTO shaft and mower driveline to be angled safely up to 80 degrees with no damage to the mower or driveline. *OPS-R-0027_C*

© 2012 Alamo Group Inc.

Stay alert and watch for trees, low hanging limbs, power lines, and other overhead obstacles and solid ground objects while you are operating. Use care to avoid hitting these items. *OPS-R-0028*

When mowing across uneven areas such as road shoulders, ditch edges, and other uneven terrain, position mower so that one support wheel is near the highest point to prevent blades from cutting into gravel or dirt which can cause rapid blade wear and extremely severe shock loads on the drivetrain resulting in rapid wear or damage to these components. Blades contacting the ground may cause objects to be thrown out from under the mower deck. Always avoid operating the mower at a height or position which may cause the blades to contact the ground. Cutting into the berm or edge of the ditch will cause abnormal and accelerated blade wear and possible blade component failure. *OPS-R-0029*

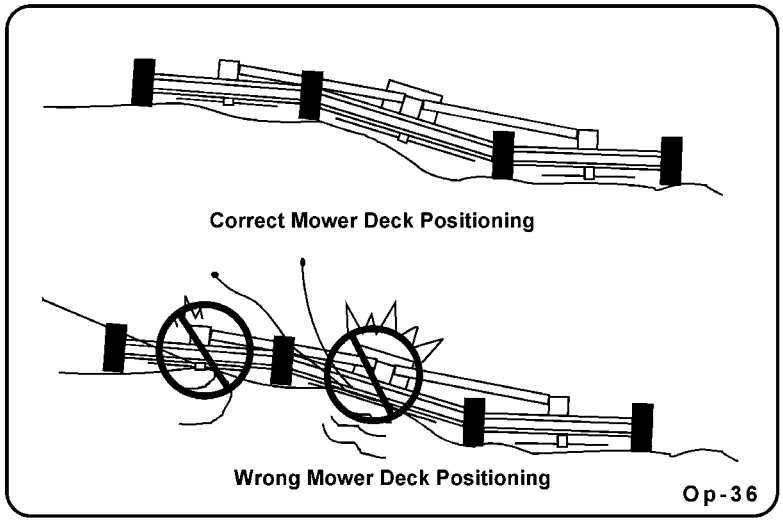

⚠WARNING Do not let the Blades turn when the Mower Deck is raised for any reason, including clearance or for turning. Raising the Mower deck exposes the Cutting Blades which creates a potentially serious hazard and could cause serious injury or even death from objects thrown from the Blades. (SRM-07)

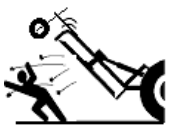

© 2012 Alamo Group Inc.

10.6 Right of Way (Highway) Mowing

- **USE DOUBLE CHAIN GUARDS** for highway, right-of-way, parks, greenbelt mowing, or all other mowing where human dwellings, vehicles, or livestock could be within 300 feet of the mower.
- No shielding is 100% effective in preventing thrown objects. To Reduce Possibility of Injury:
  1. **MAINTAIN MOWER SHIELDING** in good operational condition,
  2. **DAILY INSPECT** the condition of the Thrown Object Guards, mower Side Skirts, and skid shoes: Replace or repair worn or damaged guards.
  3. **DAILY INSPECT** the condition of the Blades and Blade Bolts. Replace any cracked, worn, bent or damage blades. Always replace blade bolts and nuts when replacing blades. Make sure the blade bolts are properly tightened.
  4. **RAISE CUTTING HEIGHT** to **6 INCHES** minimum.
  5. **INSPECT AREA** thoroughly before mowing to **REMOVE** potential **THROWN OBJECT HAZARDS.**
  6. **NEVER ALLOW BLADES** to **CONTACT SOLID OBJECT**S like wire, rocks, posts, curbs, guardrails, or ground while mowing.

⚠ DANGER **ROTARY MOWERS CAN THROW OBJECTS 300 FEET OR MORE UNDER ADVERSE CONDITIONS.**

TO AVOID SERIOUS INJURY OR DEATH TO OPERATOR OR BYSTANDERS FROM THROWN OBJECTS:

INSPECT AREA FOR POTENTIAL THROWN OBJECTS BEFORE MOWING:

- **REMOVE** debris, rocks, wire, cable, metal objects and other foreign material from area.

Wire, cable, rope, chains and metal objects can be thrown or swung outside deck with great velocity:

1. **MARK** objects that cannot be removed.
2. **AVOID** these objects when mowing.

STOP MOWING IF PASSERSBY IS WITHIN 300 FEET UNLESS:

- All **THROWN OBJECT SHIELDING** including Front and Rear Deflectors, Chain Guards, Steel Guards, Bands, Side Skirts and Skid Shoes are in place and in good condition when mowing.
- Mower sections or wings are adjusted to be close and parallel to ground without exposing blades.
- **MOWING AREA** has been inspected and foreign materials and debris have been removed.
- **PASSERSBY** are inside enclosed vehicle. *OPS-U-0040*

© 2012 Alamo Group Inc.

10.7 Shutting Down the Implement

To shut down attached mower head, first bring the tractor to a complete stop. Decrease engine RPM to idle then disengage cutterhead. The mower head will come to a complete stop within a suitable amount of time. Do not engage or disengage the cutterheads at a high RPM unless there is an emergency situation.

Park the tractor on a level surface, place the transmission in park or neutral and apply the parking brake, lower the attached implement to the ground, shut down the engine, remove the key, and wait for all motion to come to a complete stop before exiting the tractor. *OPS-U- 0016*

11. DISCONNECTING THE MOWER FROM THE TRACTOR

Before disconnecting the mower, the PTO must be disengaged and blade rotation at a complete stop. Move the mower to a level storage location and lower the center section and both wings to the ground. If the mower will be stored with the wings in the raised position, install both wing transport lock braces. If the mower is not resting securely on the ground, block the mower up securely before attempting to disconnect it from the tractor.

Use extreme care to keep feet and hands from under the mower and clear of any pinch points. *OPS-R-0030*

⚠ DANGER Always shut the Tractor completely down, place the transmission in park, and set the parking brake before you or anyone else attempts to connect or disconnect the Implement and Tractor hitches. (S3PT-15)

© 2012 Alamo Group Inc.

WARNING Never unhitch without using the Tongue Jack. The Tongue is very heavy. Attempting to lift the Tongue without using the Tongue Jack could cause strains or other injury. Allowing the tongue to fall suddenly and unexpectedly could result in crushing injury. Use the Tongue Jack for lifting the Implement only. Overloading the Tongue Jack can cause failure with possible serious bodily injury or even death. (STI-04)

When disconnecting the mower the tractor should be completely shut down and secured in position. Relieve hydraulic pressure by moving the control levers back and forth several times. Lower the parking jack and raise the mower until the tongue clevis is no longer resting on the tractor drawbar and is supported solely by the jack. The jack should be in a near vertical position with the ground and can be adjusted by loosening the positioning nut and moving the jack up to 15 degrees in each direction. Also make sure that the jack foot is securely resting at ground level or securely supported by a block before raising the mower. Once the mower tongue is being supported entirely by the jack, remove the hitch bolt, locknut, and washers. Remove the hydraulic hoses from the tractor and secure to the mower to prevent contact with dirt.

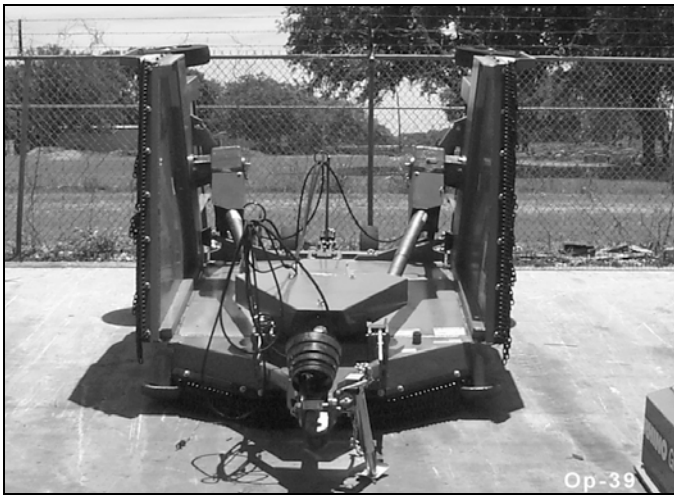

After disconnecting the mower hitch, remove the mower driveline from the tractor PTO shaft. Place the driveline in its storage bracket to prevent it from contacting mud or dirt which can contaminate the universal joint bearings and shorten the life of the driveline.

After the driveline has been removed from the tractor, place the PTO master shield back in the operating position. *OPS-R-0031_K*

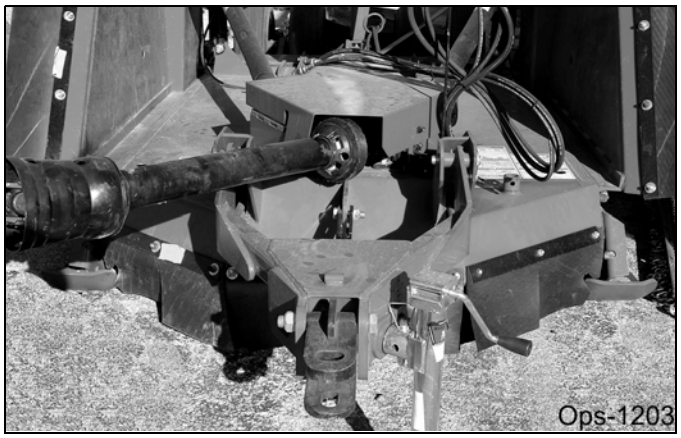

© 2012 Alamo Group Inc.

12. MOWER STORAGE

It is recommended that the mower be stored with the center section and both wings fully lowered to ground level. If the mower is stored with the wings in the raised position, select a level area and install wing transport braces to prevent the wings from falling BEFORE disconnecting the mower hitch from the tractor.

Properly preparing and storing the mower at the end of the season is critical to maintaining its appearance and to help ensure years of dependable service. The following are suggested storage procedures:

- Thoroughly clean all debris off the mower to prevent damage from rotting grass and standing water.
- Lubricate all mower grease points and fill gearbox oil levels as detailed in the maintenance section.
- Tighten all bolts and pins to the recommended torque.
- Check the mower for worn and damaged parts. Perform repairs and make replacements immediately so that the mower will be ready for use at the start of the next season.
- Store the mower in a clean, dry place with the mower housing resting securely on blocks or at ground level.
- Keep the driveline yoke from sitting in water, dirt and other contaminants.
- Use spray touch-up enamel where necessary to prevent rust and maintain the appearance of the mower.

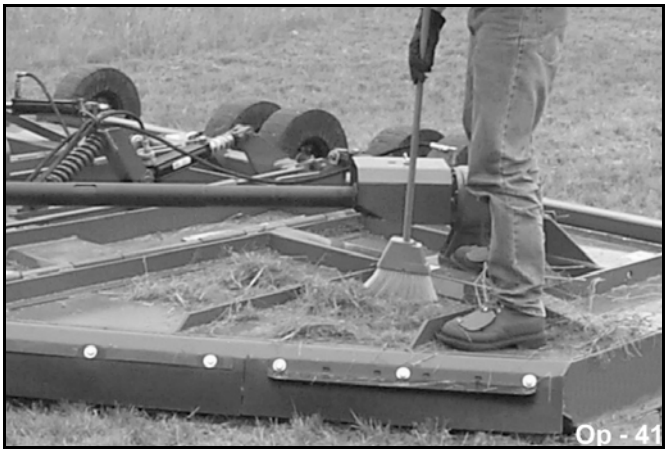

It is critical that driveline clutches slip when an obstacle or heavy load is encountered to avoid mower and/or tractor damage. If the mower sits outside for an extended period of time or is exposed to rain and/or humid air, the clutch lining plates must be inspected to ensure they are not frozen together from rust or corrosion. If the mower has been exposed to such conditions, at the start of each mowing season, and any time it is suspected that the slip clutch plates may be frozen together, readjust the slip clutch as detailed in Seasonal Clutch Maintenance of the maintenance section in this manual. *OPS-R-0032*

⚠ DANGER Never allow children or other persons to ride on the Tractor or Implement. Falling off can result in serious injury or death. (SG-10)

13. TRANSPORTING THE TRACTOR AND IMPLEMENT

Inherent hazards of operating the tractor and implement and the possibility of accidents are not left behind when you finish working in an area. Therefore, the operator must employ good judgement and safe operation practices when transporting the tractor and implement between locations. By using good judgement and following safe transport procedures, the possibility of accidents while moving between locations can be substantially minimized. *OPS-U- 0017*

© 2012 Alamo Group Inc.

Before transporting the tractor and mower, idle the tractor engine, disengage the PTO and wait for all mower moving parts to come to a complete stop. Once all mower parts are completely stopped, raise the mower to transport height. ***NOTE:*** *When raising the mower, maintain at least 1" clearance between the driveline and mower deck.* If additional mower deck height is needed for safe transport, disconnect the driveline from the tractor and secure its end to the mower deck. The mower can then be raised to the maximum lift height.. *OPS-R-0033*

If the tractor's hydraulic pump is not independent of the tractor PTO, or if the tractor PTO has to be run to have hydraulic power, disconnect the mower driveline from the tractor PTO output shaft. Secure the driveline to the mower deck to prevent driveline damage or loss during transport. *OPS-R-0034*

© 2012 Alamo Group Inc.

13.1 Tire and Wheels

Laminated Sectional Tires are designed for conditions where puncture proof performance is required and the mower will not be transported for long distances on roadways. Transport speed for laminated tires should not exceed 15 MPH. Excessive speed can cause damage to the machine and tire sections. Laminated tires must be installed such that the rubber segments lay with the ground.

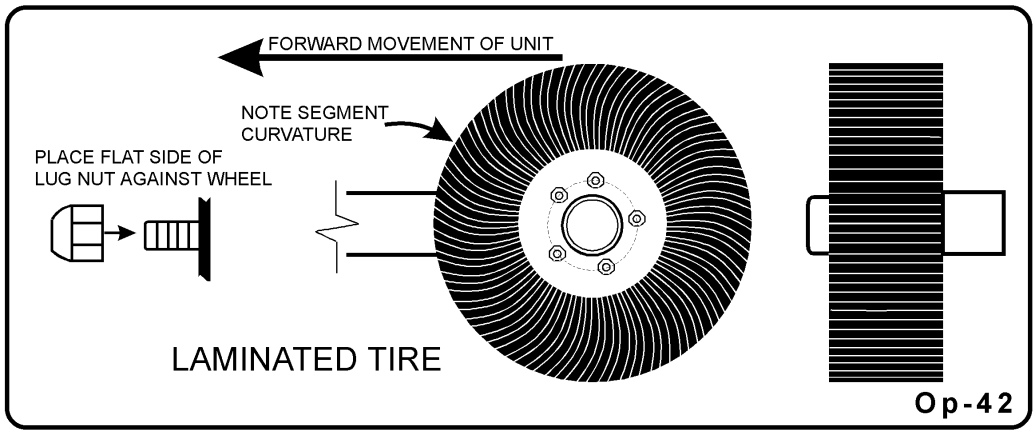

Foam Filled used Airplane Tires are ideal for conditions where a puncture proof tire is needed and the mower is frequently transported between locations.

Pneumatic Tires Implement tires are ideal for frequent long distance towing, however, they are not puncture proof and are not recommended for mowing brushy areas or other conditions that could damage the tires. Check side wall of tire for proper inflation pressure. DO NOT over-inflate. *OPS-R-0035*

Tire Size and Matching Requirements - Center Axle

Tire assemblies when mounted on center axle duals should always be within limits listed.

Laminated Tires - Maximum difference between tire diameters on a center axle should be 1/2 inch or less.

Foam Filled Airplane Tires - Maximum difference between tire diameters on a center axle should be 1 inch or less.

When replacing a tire assembly on center axle always check diameters to make sure tires fall within allowed range for maximum tire and wheel life. It may be necessary to move one or more tires from wing axles to remain within size limit.

© 2012 Alamo Group Inc.

13.2 Transporting on Public Roadways

Extreme caution should be used when transporting the tractor and implement on public roadways. The tractor must be equipped with all required safety warning features including a SMV emblem and flashing warning lights to alert drivers of the tractor's presence. Remember that roadways are primarily designed for automotive drivers and most drivers will not be looking out for you, therefore, you must look out for them. Check your side view mirrors frequently and remember that vehicles will approach quickly because of the tractor's slower speed. Be extremely cautious when the piece of equipment that you are towing is wider than the tractor tire width and/or extends beyond your lane of the road.

Make sure that a proper size safety tow chain is secured between the tractor and implement before entering a public road. *OPS-U- 0019*

⚠WARNING Make certain that the "Slow Moving Vehicle" (SMV) sign is installed in such a way as to be clearly visible and legible. When transporting the Equipment use the Tractor flashing warning lights and follow all local traffic regulations. (SG-6)

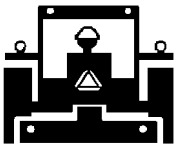

The SMV (Slow-Moving Vehicle) emblem is universal symbol used to alert drivers of the presence of equipment traveling on roadways at a slow speed. SMV signs are a triangular bright orange with reflective red trim for both easy day and night visibility. Make sure the SMV sign is clean and visible from the rear of the unit before transporting the tractor and implement on a public roadway. Replace the SMV emblem if faded, damaged, or no longer reflective. *OPS-U- 0020*

Make sure that all tractor flashing warning lights, headlights, and brake/tail lights are functioning properly before proceeding onto public roads. While newer model tractors have plenty of lighting to provide warning signals and operating lighting, most older models are only equipped with operating lights. Consult an authorized tractor dealer for lighting kits and modifications available to upgrade the lighting on older tractor models. *OPS-U- 0021*

© 2012 Alamo Group Inc.

When operating on public roads, have consideration for other road users. Pull to the side of the road occasionally to allow all following traffic to pass. Do not exceed the legal speed limit set in your country for agricultural tractors. Always stay alert when transporting the tractor and implement on public roads. Use caution and reduce speed if other vehicles or pedestrians are in the area. *OPS-U- 0022*

Reduce speed before turning or applying the brakes. Ensure that both brake pedals are locked together when operating on public roads. *OPS-U- 0023*

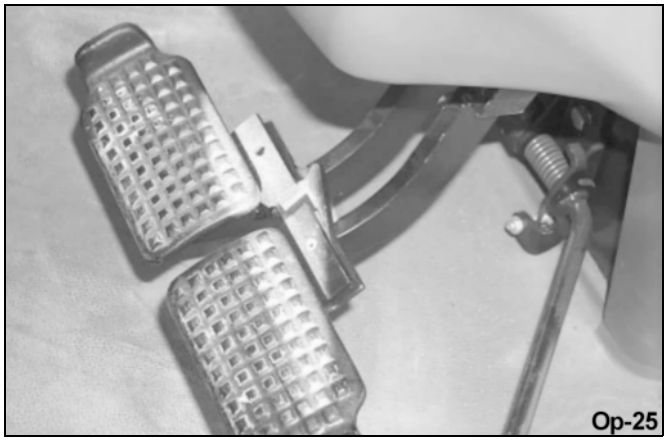

13.3 Hauling the Tractor and Implement

Before transporting a loaded tractor and implement, measure the height and width dimensions and gross weight of the complete loaded unit. Ensure that the load will be in compliance with the legal limits set for the areas that will be traveled through

Use adequately sized and rated trailers and equipment to transport the tractor and implement. Consult an authorized dealer to determine the proper equipment required. Using adequately sized chains, heavy duty straps, cables and/or binders, securely tie down both the front and rear of the tractor utilizing the proper tie down locations as specified by the tractor manufacturer.

Arrange the chains so that when tightened, the chains are pulling downward and against themselves. Carefully tighten the securing chains or other fasteners using boomers or binders to apply maximum tension. Use extreme care when attaching and removing the securing devices as the extreme tension involved when released has the potential to inflict serious injury.

While hauling the tractor and implement, make occasional stops to check that the tractor and implement have not moved or shifted and that the securing chains have maintained tension. If during transport a hard braking, sharp turning, or swerving action was performed, stop at the next safe location to inspect the security of the load.

© 2012 Alamo Group Inc.

OPERATION

14. TROUBLESHOOTING GUIDE

Problem	Possible Cause	Remedy
Excessive Vibrations	Check Gearbox bolts.	Tighten if loose.
	Check for loose nuts on Blade holder and Blades	Tighten if loose.
	Check for bent output shaft. If shaft is bent oil will normally leak from the bottom seal.	Replace shaft if bent.
	Check to see if blades are free swinging.	Free blades so they swing.
	Check for even wear on each blade tip. Were both blades changed at the same time?	Weigh blades. Weight should be within 1 oz. Always replace both blades.
	Blade Broken.	Replace blades, in sets.
	Blade carrier bent.	Replace carrier.
	Blade hub not properly seated on shaft	Remove hub, check tapered spline shaft, clean and replace.
	New Blade or bolts matched	Replace blades or bolts in sets.
	Drivelines not phased correctly. Implement & tractor yokes must be in line.	Replace Drivelines.
Gearbox Overheating	Low on lubricant.	Fill to level plug.
	Improper type lubricant.	Replace with NLGI 000 lubricant.
	Excessive trash build-up around gear box	Remove trash.
	Bearing or gears set up improperly	Consult your dealer.
Gearbox Noisy	Rough gears.	Run in or change gears.
	Worn bearing.	Replace bearing
Gear Box Leaking	Damaged oil seal	Replace Seal.
	Bent shaft.	Replace oil seal and shaft.
	Shaft rough in oil seal area.	Replace or repair shaft.
	Oil seal installed wrong.	Replace seal.
	Oil seal not sealing in the housing. on OD of seal.	Replace seal or use a sealant.
	Oil level too high.	Drain oil to proper level.
	Sand hole in casting.	Replace castings or gearbox.
	Gasket damaged.	Replace gasket.
	Bolts loose.	Tighten bolts.
Clutch Slips Excessively	Clutch linings badly worn or plates warped.	Repair clutch per maintenance section of manuals.
	Too much power for clutch.	Reduce ground speed and material intake.
	Oil on facings.	Replace facings.
	Friction facings glazed.	Clean with emery cloth.

© 2012 Alamo Group Inc.

Uneven Cut	Excessive ground speed.	Reduce ground speed.
	Blades worn, dull, or bent.	Replace blades. (Refer to "Maintenance" section).
	Mower not level side to side.	Adjust. (Refer to "Assembly" section)
	Improper height adjustment.	Adjust Mower height. (Refer to "Assembly" section)
	Low tractor tire pressure on one side.	Adjust tire pressure. (Refer to your tractor operator's manual)
	Turning too fast.	Reduce ground speed when turning.
	Tractor tires push grass down.	Adjust your tractor wheel spacing. (Refer to "Operation" section)
	Damaged Mower pan.	Repair or replace as necessary.
Uncut Material	Excessive ground speed	Reduce ground speed.
	RPM too low	Use full PTO speed. (Refer to your tractor operator's manual)
	Improper blade for direction of cut.	Install blades so rotation is correct.
Poor Shredding	Excessive ground speed.	Raise the front of Mower relative to the rear to hold and circulate material longer. (Refer to the "Operation Section -Setting the Mower-Setting Deck Height") Reduce ground speed
	Cutting too high.	Lower cutting height. (Refer to the "Operation Section-Setting the Mower-Setting Deck Pitch")
Windrowing or Uneven Material Distribution	Material heavy and lush.	Raise the front of Mower relative to the rear. (Refer to the "Operation Section-Setting the Mower-Setting Deck Height")
	Excessive ground speed	Reduce ground speed.
	Conditions too wet.	Wait for conditions to dry. Reduce ground speed.

© 2012 Alamo Group Inc.

MAINTENANCE SECTION

© 2012 Alamo Group Inc.

MAINTENANCE

HAZARDS WITH MAINTENANCE OF IMPLEMENT

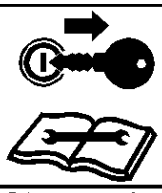		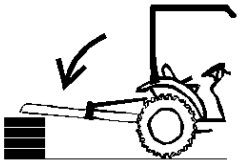		
Stop engine remove key before conducting maintenance	Entanglement hazard Do Not approach or touch a rotating PTO driveshaft	Block up implement before servicing Use large blocks on soft or wet soil	Crushing injury wing falling. Engage wing locks	Inspect Blades for damage or cracks

⚠WARNING **AVOID SERIOUS INJURY OR DEATH FROM COMPONENT FAILURE BY KEEPING IMPLEMENT IN GOOD OPERATING CONDITION IN PERFORMING PROPER SERVICE, REPAIRS AND MAINTENANCE.**

BEFORE PERFORMING SERVICE, REPAIRS AND MAINTENANCE ON THE IMPLEMENT:
SECURE EQUIPMENT FOR SERVICE
BLOCK OUT POTENTIAL ENERGY HAZARDS; Rotating Parts, Raised Components, Hydraulic Pressure.

- **STOP ENGINE AND PTO**, engage parking brake, lower implement, allow all moving parts to stop and remove key before dismounting from tractor.
- **PLACE** implement on ground or securely block up raised equipment. Use large blocks on soft or wet soil.
- **SECURELY LATCH** and **LOCK** raised implement wings
- **BLOCK UP IMPLEMENT TONGUE** with large blocks and tongue jack. **DO NOT** crawl or work under implement supported only by tongue jack.
- **PUSH** and **PULL** Remote Hydraulic Cylinder lever to relieve hydraulic pressure.
- **DISCONNECT IMPLEMENT** Hydraulic **HOSES** from tractor
- **DISCONNECT IMPLEMENT** driveline from tractor **PTO SHAFT**.

WEAR SAFETY GLASSES, PROTECTIVE GLOVES and follow SAFETY PROCEDURES when performing service, repairs and maintenance on the implement:

- Always **WEAR** protective **GLOVES** when handling blades, knives, cutting edges or worn component with sharp edges.
- Always **WEAR GLOVES** and **SAFETY GLASSES** when servicing hot components
- **AVOID CONTACT** with hot hydraulic oil tanks, pumps, motors, valves and hose connection surfaces.
- **SECURELY** support or **BLOCK UP** raised implement, framework and lifted components before working underneath equipment.
- **STOP** any implement movements and **SHUT-OFF TRACTOR** engine before doing any work procedures.
- **USE** ladder or raised stands to reach high equipment areas inaccess ble from ground.
- **ENSURE** good footing by standing on solid flat surfaces when getting on implement to perform work.
- **FOLLOW** manufacturer's instructions in handling oils, solvents, cleansers, and other chemical agents.
- **DO NOT** change any factory-set hydraulic calibrations to avoid component or equipment failures.
- **DO NOT** modify or alter implement, functions or components.
- **DO NOT WELD** or repair rotating mower components. These may cause vibrations and component failures being thrown from mower.

PERFORM SERVICE, REPAIRS, LUBRICATION AND MAINTENANCE OUTLINED IN IMPLEMENT MAINTENANCE SECTION:

- **INSPECT** for loose fasteners, worn or broken parts, leaky or loose fittings, missing or broken cotter keys and washers on pins, and all moving parts for wear.
- **REPLACE** any worn or broken parts with authorized service parts.
- **LUBRICATE** unit as specified by lubrication schedule
- **NEVER** lubricate, adjust or remove material while it is running or in motion.
- **TORQUE** all bolts and nuts as specified.

BLADE INSPECTION:

- **REPLACE** bent, damage, cracked or broken blades immediate with new blades.
- **AVOID** blade failures and thrown broken blades. **DO NOT** straighten, weld, or weld hard-facing blades.

SAFETY SHIELDS, GUARDS AND SAFETY DEVICES INSPECTION:

- **KEEP** all Deflectors, Chain Guards, Steel Guards, Gearbox Shields, and PTO integral shields, Bands, Side Skirts and Skid Shoes in place and in good condition.
- **REPLACE** any missing, broken or worn safety shields, guards and safety devices.
- Engine Exhaust, some of its constituents, and certain vehicle components contain or emit chemicals known to the state of California to cause cancer, birth defects or other reproductive harm.
- Battery posts, terminals and related accessories contain lead and lead compounds, chemicals known to the state of California to cause cancer, birth defects or other reproductive harm. ***PN HM02***

© 2012 Alamo Group Inc.

PARTS INFORMATION

PARTS INFORMATION

Bush Hog mowers use balanced and matched system components for blade carriers, blades, cuttershafts, knives, knife hangers, rollers, drivetrain components, and bearings. These parts are made and tested to Bush Hog specifications. Non-genuine "will fit" parts do not consistently meet these specifications. The use of “will fit” parts may reduce mower performance, void warranties, and present a safety hazard. Use genuine Bush Hog mower parts for economy and safety. (SPBH-1)

SEE YOUR BUSH HOG DEALER

Before operating your Rotary Cutter, make sure it is properly lubricated and thoroughly inspected. Only a minimum of time and effort is required to regularly lubricate and maintain this machine to provide long life and trouble free operation.

WARNING Always disengage the PTO before raising the Rotary Cutter for transporting or making adjustments.

NOTE: *Some guards and shields have been removed from the illustrations and pictures for instructional clarity. DO NOT operate implement with out all shields and guards in place and in good condition.*

Lubrication

Do not let excess grease collect on or around parts, particularly when operating in sandy areas. The accompanying illustration shows lubrication points. The chart gives the frequency of lubrication in hours, based on normal operating conditions. Severe or unusual conditions may require more frequent lubrication.

Add EP80W-90 oil, if necessary, to bring oil level to check plug located on side of housing. Capacity of center and wing gearboxes is 6 quarts. (5.7L). Capacity of power divider gearbox is 2.75 quarts, (2.6L). Use N.L.G.I #2 type grease for all locations designated with grease gun. Be sure to clean the fitting thoroughly before using grease gun. Failure to maintain proper lubrication will result in damage to U-joints, gearbox, and/or driveshaft.

© 2012 Alamo Group Inc.

Mower Grease Points & Gearbox Oil Inspection

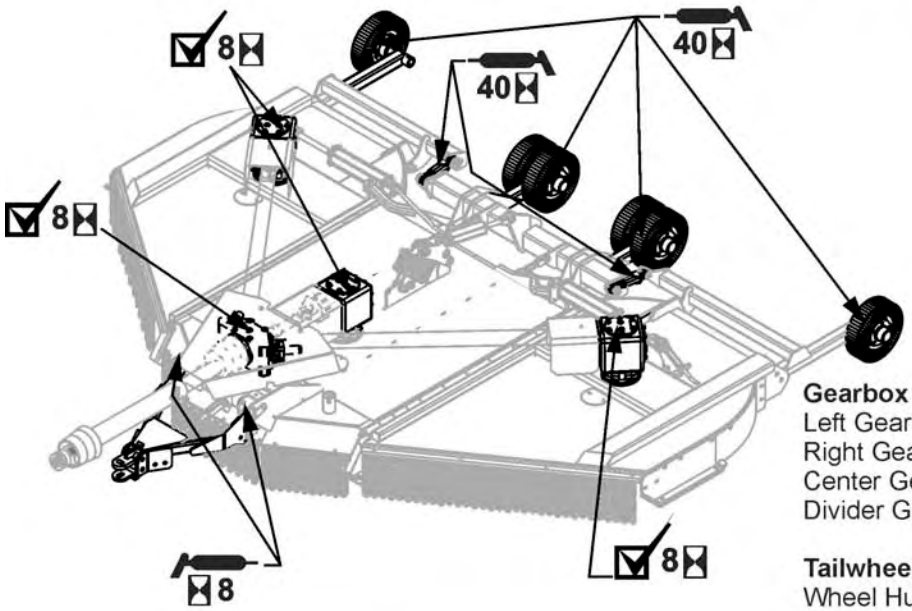

Gearbox

Left Gearbox	8 Hours
Right Gearbox	8 Hours
Center Gearbox	8 Hours
Divider Gearbox	8 Hours

Tailwheel

Wheel Hubs	40 Hours
Axle Pivot	8 Hours
Tongue Pivot	8 Hours

Driveline Grease Points

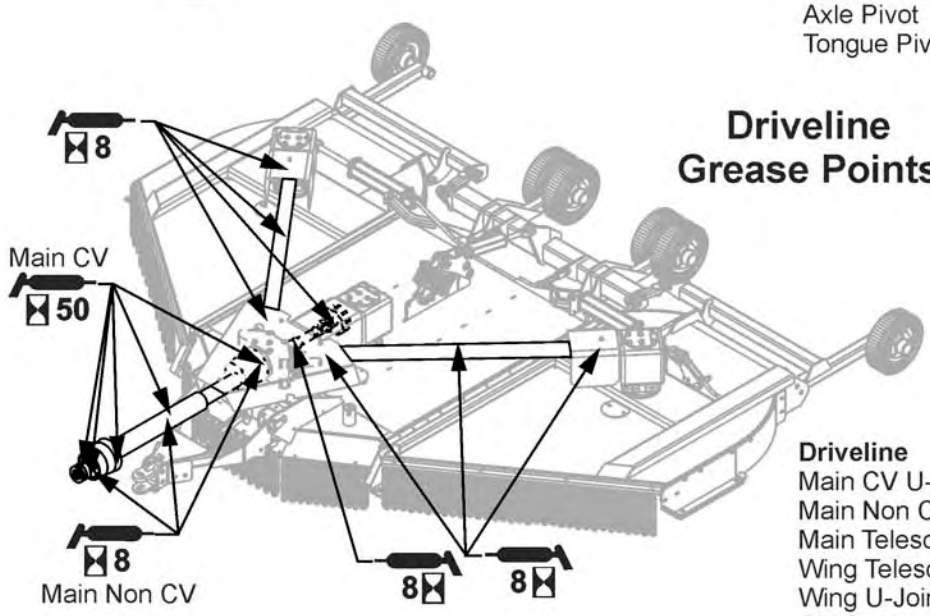

Driveline

Main CV U-Joints	50 Hours
Main Non CV U-Joints	8 Hours
Main Telescoping Tube	8 Hours
Wing Telescoping Tube	8 Hours
Wing U-Joints	8 Hours
CV Center Housing	8 Hours

Mnt-R-0553

© 2012 Alamo Group Inc.

WING GEARBOX

The gearbox should be full and not require additional lubricant unless the box is cracked or a seal is leaking. It is recommended that the oil level plug **(Figure MntP-R-0272)** be removed after every 10 hours of operation. If required, oil should be added until it runs out hole.Check the oil level after operating long enough for warmed oil to flow through the Bearings into the lower Gearbox cavity. Refill to the test plug level. Check the oil again before operation, after every 40 hours of mowing, and at the beginning and end of each mowing season.

Recommended lubricant is Multi-Purpose Gear Oil EP80W-90. Gearbox capacity is 1.6 Quarts.

***NOTE**: Make sure mower is level when checking oil in the gearbox.*

***NOTE**: Overfilling of Gearbox will cause pressure to build up and cause Grease Seals to leak.**ATTENTION**: If the Gearbox suddenly starts making an unusual noise, stop at once, check for leaks, and refill Gearbox as required.*

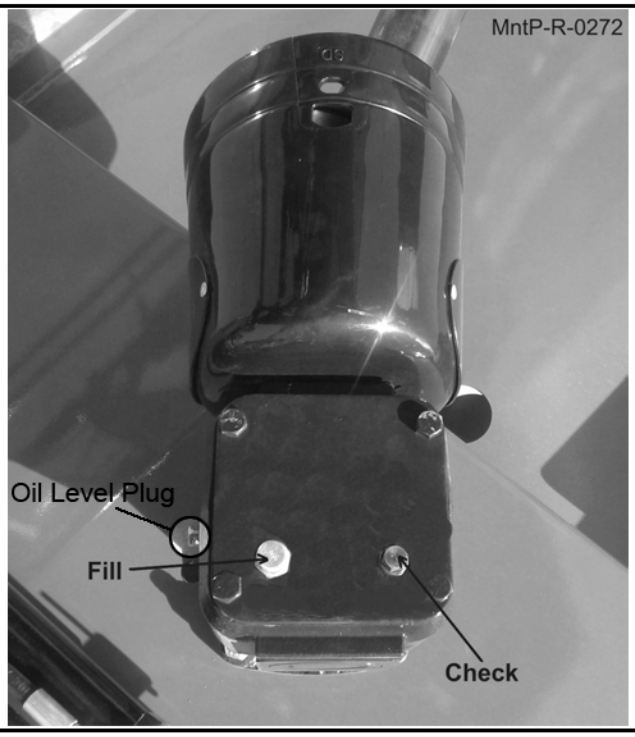

DIVIDER GEARBOX

The Test Plug and filler pressure for the Divider Gearbox are located on the right side of the input shaft.

Use EP80W-90 Gear Oil. Gearbox has a capacity of 2 quarts.

***NOTE**: Do Not overfill. If gearboxes are filled above Test Plug Level, pressure under working conditions may cause Grease Seals to leak.*

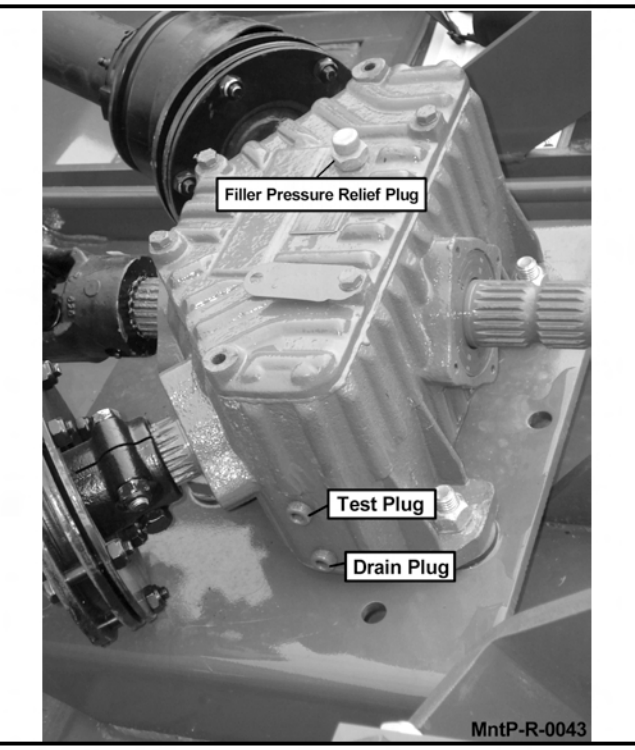

© 2012 Alamo Group Inc.

GEARBOX LUBRICANT REPLACEMENT

Over a period of time gearbox lubricant becomes contaminated with moisture and fine metal particles wearing off from gears and bearings. It is recommended that lubricant be replaced every 1500 hours use or 3 years., whichever comes first. Drain ports are provided in gearboxes.

NOTE: Always tighten plug securely after lubricant change. Loss of plug will result in gearbox failure.

DRIVELINES

⚠ CAUTION Many of the equipment components are HEAVY (70 lbs or greater) and Special Lifting Procedures are recommended. Use lifting assistance such as mechanical assistance, two people, and proper lifting techniques when connecting or installing the driveshaft to reduce the possibility of back injuries.

The Drivelines and U-Joints should be inspected each morning before the mower is started.

The U-Joint and CV Joint on the Driveline undergo extreme forces when the unit is turning or when the Wings are being raised. It is important that the U-Joints and CV Joint be greased per schedule before the unit is started. The U-Joints are located at each end of the Center and Wing Drivelines. The CV Joint is located at the end of the Main Driveline. The U-Joint and CV Joint assemblies are accessible by rotating the Driveline Safety Shield until the hole in the Shield matches up with the Grease Fitting. Lubricate all fittings with a good quality Lithium Soap compatible E.P. grease meeting the N.L.G.I. #2 specifications and containing no more than 1% Molybdenum Disulfide. An E.P. grease meeting the N.L.G.I. #2 specifications and containing 3% Molybdenum Disulfide may be substituted in the telescoping members only. Inspect the U-Joint for wear by holding the shaft on one side of the U-Joint while trying to rotate the shaft on the other side of the U-Joint. If there is noticeable movement in the Driveline replace the U-Joint before it causes severe damage to the Driveline.

MAIN DRIVELINE LUBRICATION

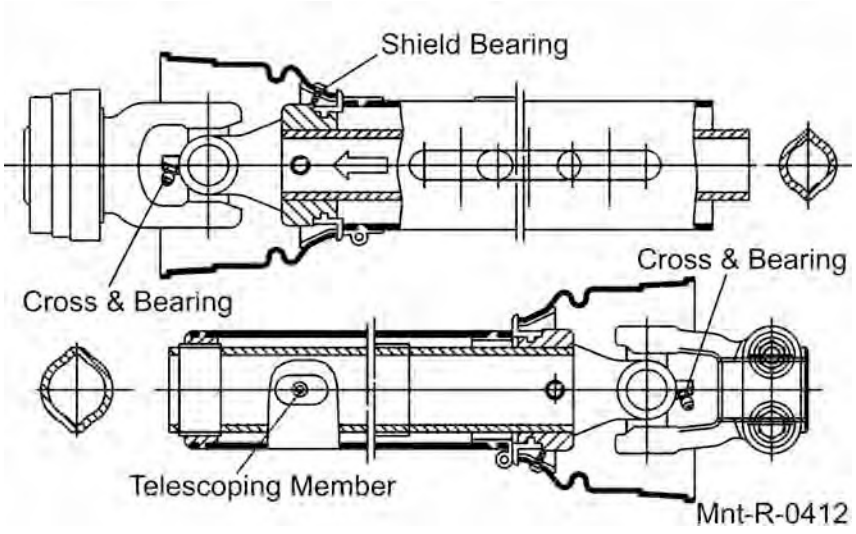

LOCATION	EXTENDED LUBE INTERVAL	LEVER ACTION PUMPS
Cross & Bearings	8 Hours	2 - 3
Telescoping Tube	8 Hours	6 - 8
Shield Bearings	50 Hours	1 - 2

© 2012 Alamo Group Inc.

WING DRIVELINE LUBRICATION

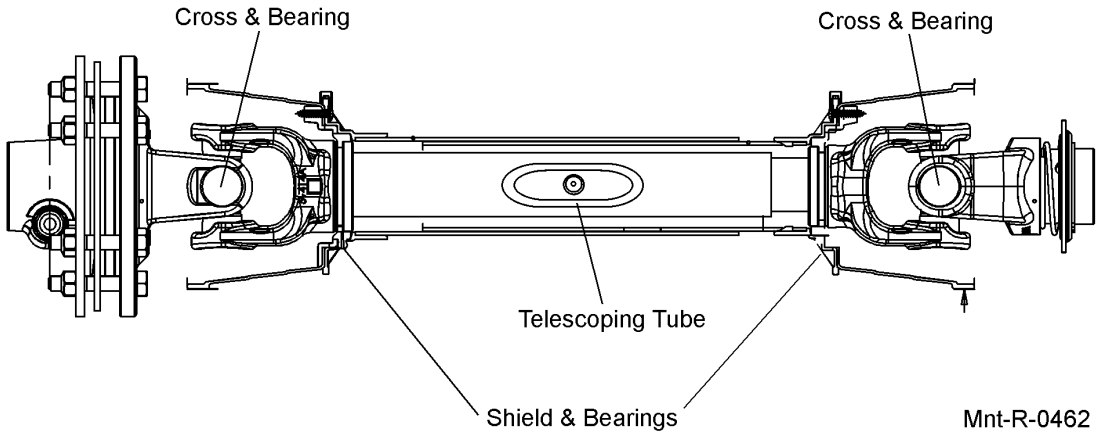

INTERMEDIATE DRIVELINE LUBRICATION

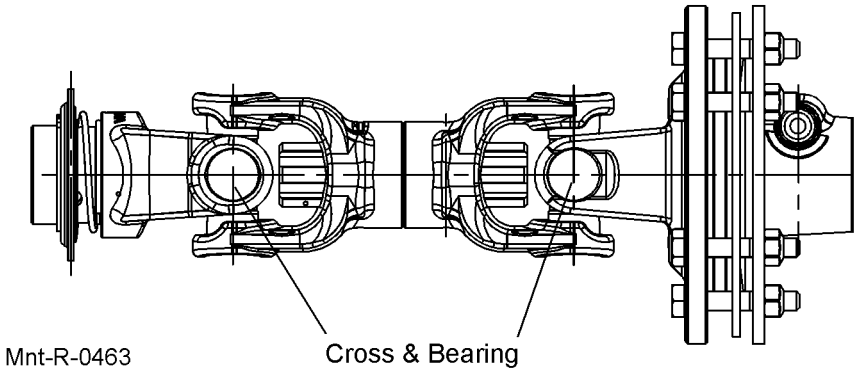

LOCATION	EXTENDED LUBE INTERVAL	LEVER ACTION PUMPS
Cross & Bearings	8 Hours	2 - 3
Telescoping Tube	8 Hours	6 - 8
Shield Bearings	50 Hours	1 - 2

© 2012 Alamo Group Inc.

MAIN & WING DRIVELINE SHIELDS

To remove the main inner driveline shield, Remove the locking screws. Align the bearing tabs with the cone pockets. FIGURE Mnt-0026. Remove the half-guard and remove the bearing ring. FIGURE Mnt-R-0012.

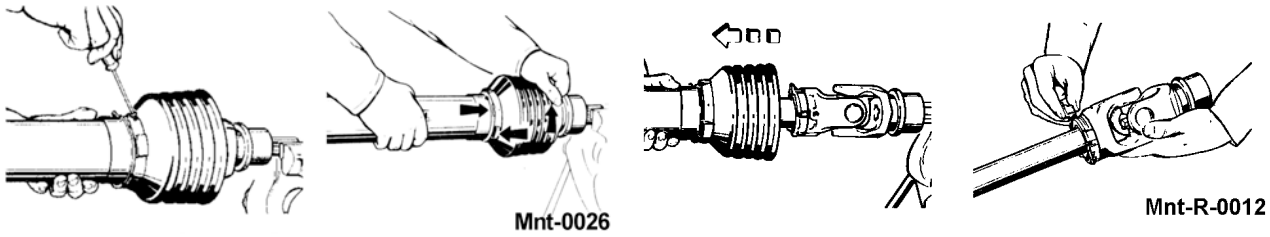

Mnt-0026

Mnt-R-0012

Inspect the driveline shield for worn areas or cracks. If the shield has any dents or cracks, replace the Shield. While the Shields are off, examine the Driveline for signs of abnormal wear, bent or twisted shafts, or cracks in the shafts or tubes. Check to see that the Drivelines telescope easily. If the Drivelines do not telescope properly or show signs of abnormal wear, the shaft should be repaired or replaced.

To assemble the main inner driveline shield, grease the yoke groove and inner profile tube. Attach the bearing ring in groove with recesses facing profile tube. FIGURE Mnt-0027. Slide on the half shield. Turn the cone until it engages correctly. Install locking screws. FIGURE Mnt-0028.

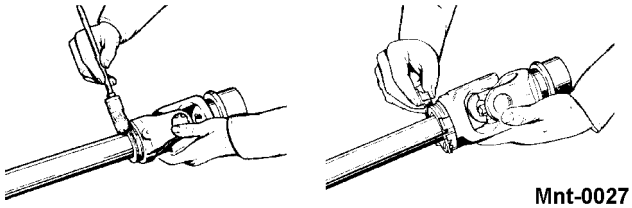

Mnt-0027

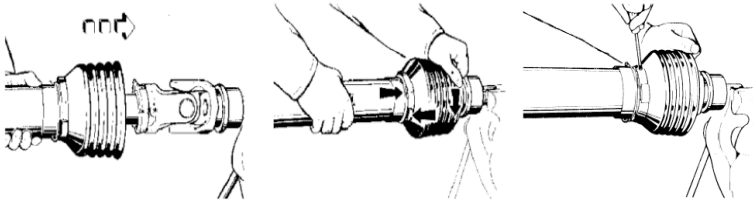

Mnt-0028

IMPORTANT! Check that Guard Missing decal on steel tube under inner guard and Rotating Driveline Decal are firmly affixed, undamaged and readable. If not, replace.

Mnt-R-0362

© 2012 Alamo Group Inc.

IMPORTANT: Scan this QR Code with your smart phone to link to the ADMA Driveline Safety Manual for more information on the safe use of a driveline during normal operation and maintenance. Or type in your internet browser the following web address: www.algqr.com/dme *Ops-0009-MISC*

BLADE SERVICING

Inspect blades before each use to determine that they are properly installed and in good condition. Replace any blade that is bent, excessively nicked, worn, or has any other damage. Small nicks can be ground out when sharpening.

⚠WARNING Use only original equipment blades on this cutter. They are made of special heat-treated alloy steel. Substitute blades may not meet specifications and may fail in a hazardous manner that could cause injury.

⚠ DANGER Replace bent or broken blade with new blades. NEVER ATTEMPT TO STRAIGHTEN OR WELD ON BLADES SINCE THIS WILL LIKELY CRACK OR OTHERWISE DAMAGE THE BLADE WITH SUBSEQUENT FAILURE AND POSSIBLE SERIOUS INJURY FROM THROWN BLADES. (SGM-10)

- Manually wiggle the blade carriers to check for any looseness.
- Retighten any loose parts.
- Recheck torque every 50 hours.

Important Operating with loose blade hardware will damage the blade holder and blades. Whenever the blades have been removed or replaced, the hardware must be retightened after the first eight hours of operation. On new units check blade hardware and the blade nut torque after first 8 hours.

Important Operating with loose blade holder will damage the blade holder and output shaft, two initial tightenings are required. Retighten after one hour and again after the day of operation. In severe cutting conditions or commercial use, a daily inspection is required.

Important To help prevent structural damage caused by loose hardware, tighten gear case hardware as specified. Check torque after first 8 hours of use and every 50 hours thereafter.

⚠ DANGER Inspect Blades daily for abnormal wear. If Blades have a notch worn into the leading edge at the lower bend more than a 1/2” DEEP (due to running in gravel and/or the ground), REPLACE BOTH BLADES ON THAT CARRIER IMMEDIATELY. Failure to replace such abnormally worn blades may lead to catastrophic failure of the blade and ejection of the broken part with tremendous force which may cause bodily injury or death.

© 2012 Alamo Group Inc.

NOTE: Replace Blades in pairs after no more than 1/2" notch wear!

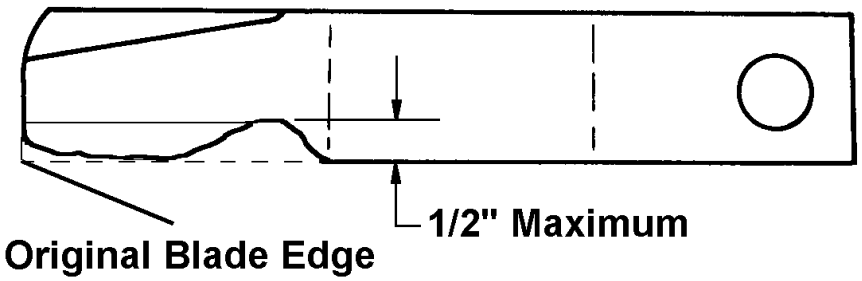

Mnt-R-0034

BLADE SHARPENING

Always sharpen both blades at same time to maintain balance. Follow original sharpening pattern as shown in FIGURE Mnt-R-0008. Always sharpen blades by grinding. DO NOT heat and pound out edge. Do not sharpen blade to a razor edge, but leave a 1/16" blunt edge. Do not sharpen back side of blade.

IMPORTANT: When sharpening blades, grind each blade the same amount to maintain balance. The difference in blade weights should not exceed 1 ounce. Unbalanced blades will cause excessive vibration which can damage gear box bearings. Vibration may also cause structural cracks in cutter housing.

⚠WARNING Never work under equipment supported by a hydraulic device because it may drop if the control is actuated (even with the engine stopped) or in the event of hose failure, etc. Always use a secure support for equipment which must be serviced while in the raised position.

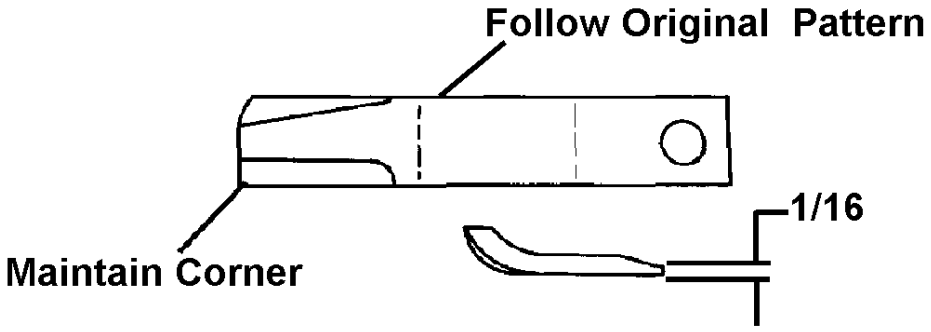

Mnt-R-0008

NOTE: Replace Blades in pairs after no more than 1/2" notch wear!

© 2012 Alamo Group Inc.

BLADE REMOVAL

To remove blades for sharpening or replacement, remove the cover plate on deck of cutter near gear box. Remove lock nut from blade bolt (left hand threaded bolt). *NOTE: Inspect lock nut after removal and replace if threads are damaged.* Always replace nut when replacing blade bolt. When installing blades be sure and check blade bolt pivot diameter for wear. Replace bolt if worn more than 1/4 inch at any point. See Figure Mnt-R-0014. Install blade bolts with partially worn side of bolt either toward or away from center. Tighten lock nut to 600 ft. lbs.

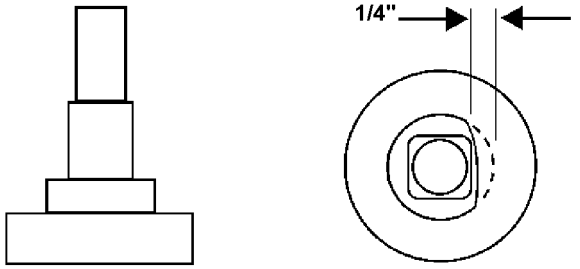

Mnt-R-0014

WARNING Avoid personal injury. Blade and/or blade carrier removal should be done only with the tractor engine shut off, key removed, in neutral, parking brake on, PTO disengaged, and the cutter blocked in the raised position.

Blade Bolt Inspection

Inspect Blade Bolt Head daily for wear as followed:

Excessive Blade Bolt Wear
Cause: Blade Bolt contacts a foreign or solid object while Blade is in motion.

Remedy: Inspect the area before mowing to determine where the foreign objects are located and place visible hazard markers to identify the areas where immovable foreign objects exist, and avoid hitting the objects.

Notches and Gouges
Cause: Blade Bolt contacting foreign objects.

Remedy: Inspect area to be mowed and remove foreign objects that could cause damage to the blade bolt.

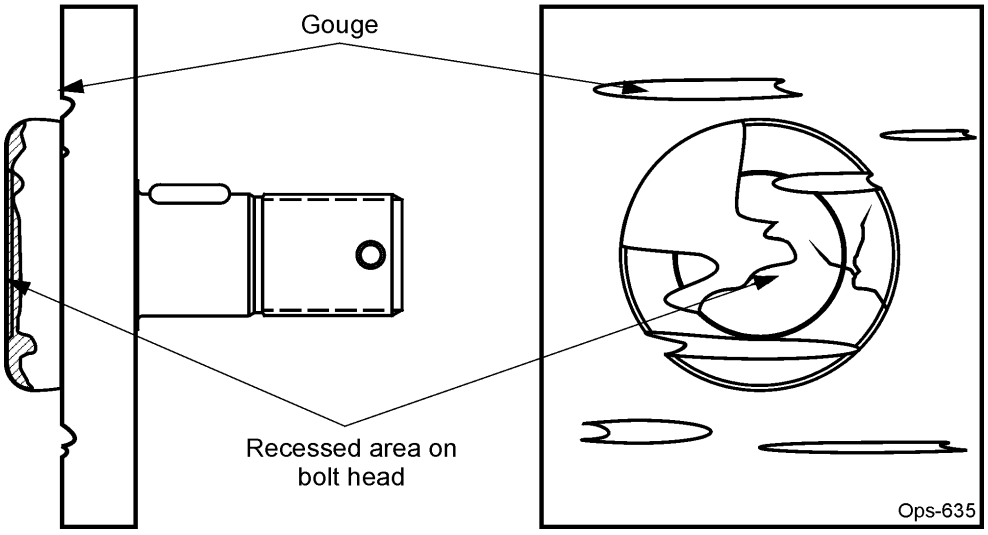

DANGER Inspect the Blade Bolt Heads daily for abnormal wear. REPLACE BOTH BLADE BOLTS on the Blades IMMEDIATELY if either blade bolts has:

- Visible cracks or
- If the recessed area on blade bolt is worn off or

© 2012 Alamo Group Inc.

- If Blade Bolt has gouges or chipped areas.

Failure to replace abnormally worn blade bolts may lead to catastrophic failure of the blades and ejection of the broken part which may cause serious bodily injury or death.

Always replace Blade Bolts with new bolts whenever replacing the Blades.

BLADE CARRIER REMOVAL

Remove cotter pin and loosen slotted nut on gear box shaft. Loosen but do not remove the nut until the blade carrier is loosened. Use a suitable two-jaw gear puller to pull carrier off tapered gear box shaft. If gear puller is not available use long bar inserted through blade bolt access hole with end against rotor bar. Strike opposite end of bar with sledge hammer. Rotate blade carrier 180 degrees and repeat process.

© 2012 Alamo Group Inc.

BLADE CARRIER INSPECTION

Blade bolt fit into carrier bushings should be checked every time blades are changed. The blade bolt should fit into carrier bushings as a snug slip fit. If the blade bolt fit appears to be loose or sloppy, measure the square hole in bushing. If the bottom of the square hole is 1/16” or greater than the square shoulder of the new blade bolt the bushings should be replaced. Bushings can be removed by cutting bushing head where it is welded to carrier bar. Once head is removed bushing can be pressed out of bar. Clean and grind top of blade bar so new bushing can be installed and welded. Bushing should be pressed into bar as far as possible. Use low hydrogen rod to weld bushing in place.

⚠WARNING Failure to replace a worn blade carrier bushing as described above may lead to catastrophic failure of the blade, blade bolt, and/or blade bolt nut resulting in the ejection of the broken parts out from under the mower at tremendous speed and force which could result in serious bodily injury or death.

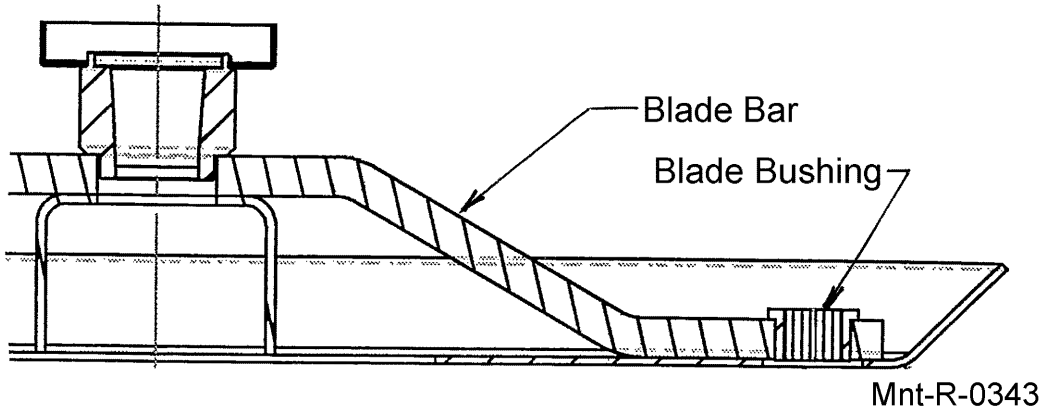

Mnt-R-0343

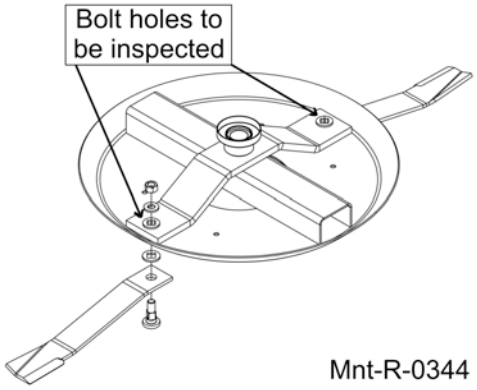

Mnt-R-0344

© 2012 Alamo Group Inc.

BLADE CARRIER INSTALLATION

Clean the splines on both the blade carrier and output shaft. Position carrier on the gear box output shaft and install flat washer and 1" hex nut. Tighten nut holding blade carrier to minimum 450 ft. pounds, strike the carrier on the hub several times with a heavy hammer to seat the hub. Use a suitable spacer over the nut to prevent damage to the nut and threads. Retighten the nut to 450 ft. pounds. Install and spread cotter pin.

NOTE: *After a few hours of operation always recheck blade carrier retaining nut torque.*

Important Operating the mower with a loose blade pan or holder can damage the taper connection on the gearbox output shaft. To ensure proper seating between the blade holder and output shaft check and tighten the retaining nut after the first day of operation. Recheck the blade carrier attachment each morning before operating. Grasp the carrier firmly with both hands and try to push and pull the carrier with one hand while pulling and pushing with the other hand to try to rock or oscillate the blade carrier. If the carrier is loose retighten the retaining nut before operating the mower.

⚠WARNING Avoid personal injury. Do not work under cutter without support blocks to keep frame from falling.

SLIP CLUTCHES

A slip clutch is incorporated on each outboard driveline. The slip clutches are designed to slip, absorb the shock load, and protect the drive-ins of the mower.

After the first hour of operation, the slip clutches should be checked for overheating. After this first check, inspect weekly or anytime there is overheating. To adjust the slip clutch, tighten the spring bolts 1/8 (maximum) turn at a time. See Figure Mnt-R-0405 for minimum dimension. DO NOT tighten springs beyond 3/16” gap between pressure plate and spring.

Each slip clutch should be checked periodically and adjusted to compensate for wear. The lining plates are 1/8" thick when new. Replace after 1/32" wear. If the mower has been idle for an extended period of time, or in wet weather, before operating check to be sure the friction lining plates are not rusted/frozen together. Should this occur refer to the procedure described in the "Seasonal Clutch Maintenance" section.

There are four friction lining plates in the slip clutch. These should be checked weekly for oil or grease, wear, and moisture which could cause corrosion on the drive plates.

WHEEL HUB ASSEMBLY

The Wheel Hub Assemblies need to be lubricated on a weekly basis. Figure MntP-R-0032.

© 2012 Alamo Group Inc.

TIRES AND WHEELS

Before working on any tires and wheels make certain the Cutter is jacked up high enough and securely supported. When installing laminated or airplane tires, be sure the flat side of the lug nut is against the Wheel.

When installing Sectional Tires and Wheels note the direction of travel and the curvature of rubber segments in the tire (See Assembly Section). Do not exceed 15 M.P.H. on Sectional Tires. When removing Airplane Tires, let all of the air out of the tire before removing lug nuts or wheel bolts or nuts. Remove valve core to make certain that there is no air pressure left in tube before separating wheel halves to dismount tires. DO NOT LOOSEN WHEEL CLAMP BOLTS BEFORE PRESSURE IS REMOVED FROM TUBE AND TIRE TO PREVENT EXPLOSIVE SEPARATION OF WHEEL HALVES WITH POSSIBLE SERIOUS BODILY INJURY. Do not exceed 15 M.P.H. on Airplane or Rib Implement Tires.

Maximum airplane tire inflation pressure is 50 PSI, minimum inflation pressure is 20 PSI. Inflate ribbed implement tires to manufacturer rated PSI as shown on the tire sidewall.

Tongue

The Tongue Hitch Pins attach the Tongue to the Center Section and should be checked for signs of wear or cracking. Replace as needed. The Drawbar 1" Bolt fastens the mower to the tractor Drawbar. When the mower is unhitched and this 1" Bolt is removed, examine for signs of cracking or wear. Replace the Drawbar 1" Bolt at first sign of either problem. Figure Ops-1155

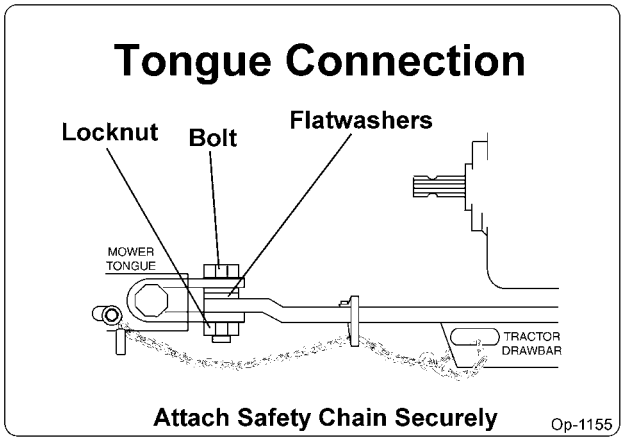

© 2012 Alamo Group Inc.

HIGH PRESSURE OIL LEAK HAZARD

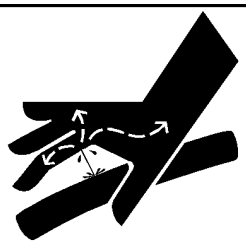		
High pressure oil penetrating skin	High pressure oil eroding skin	Using cardboard to check for oil leaks

⚠ DANGER **TO AVOID SERIOUS INJURY OR DEATH FROM HIGH PRESSURE HYDRAULIC OIL LEAKS PENERATING SKIN:**

- **DO NOT OPERATE** equipment with oil or fuel leaks.
- **KEEP** all hydraulic hoses, lines and connections in **GOOD CONDITION** and **TIGHT** before applying system pressure.
- **RELIEVE HYDRAULIC PRESSURE** before disconnecting lines or working on the system.
- **REMOVE** and replace hose if you suspect it leaks. Have dealer test it for leaks.

HIGH PRESSURE FLUID LEAKS CAN BE INVISIBLE.

WHEN CHECKING FOR HYDRAULIC LEAKS AND WORKING AROUND HYDRAULIC SYSTEMS:

- **ALWAYS WEAR** safety glasses and impenetrable gloves.
- **USE** paper or cardboard to search for leaks.
- **DO NOT USE** hands or body parts to search for leak.
- **KEEP** hands and body **AWAY** from pin holes and nozzles ejecting hydraulic fluid.
- Hydraulic fluid may cause gangrene if not surgically removed immediately by a doctor familiar with this form of injury.

PN HP01

HYDRAULIC HOSES

Replace pinched and broken Hydraulic Hoses at once. Tighten any Hydraulic Fitting with fluid leaking from it. If fluid still leaks, loosen the fitting, apply a pipe thread compound to the threads and tighten. Care must be exercised when tightening Hydraulic Fittings. Too much tightening can cause the fittings to crack and require replacement fittings.

Although a small amount of oil will be present from bleeding at all Hydraulic Fittings, significant amounts of oil leaking around the Breather Plug on the Cylinder indicates that the seal in the Cylinder is worn out. Replace the seals in the Cylinder immediately before the Cylinder is damaged or too much hydraulic fluid is lost.

MAXIMUM ALLOWABLE OPERATING OIL TEMPERATURE

Do not operate this implement if the tractor hydraulic oil temperature exceeds 200°F

© 2012 Alamo Group Inc.

Flex Wing Hydraulic Cylinder Replacement Instructions

Implement Cylinders Removal and Replacement

Follow these Steps:

1. Clear the area of all personnel before lowering the wings.
2. From the tractor seat with your seat belt fastened around you, Lower the implement wings to the ground. Do Not attempt to replace the cylinder with the wings in the raised position.
3. Shut off the tractor, engage the parking brake, place the tractor transmission in the park position, and remove the key before dismounting.
4. Block up the center and wing sections with blocks or jack stands
5. Release all oil pressure from the circuit by moving the valve controls handles back and forward.
6. Remove the Implement Input Driveline from the tractor PTO shaft.
7. Remove the hydraulic hoses from tractor quick disconnects.
8. Wear Safety Glass and impenetrable gloves when working with hydraulic hoses and fittings.
9. Check to see that the cylinder is not under pressure by moving the cylinder pins by hand. The pins should be loose. If the cylinder pins are in a bind and can not be moved the cylinder maybe under pressure. Make sure the implement decks and axles are supported by blocks and then carefully remove one of the cylinder pins.
10. Do Not allow any one or any part of your body to be underneath the implement wing.
11. Do not loosen the hydraulic connections to the cylinder until all pressure has been relieved.
12. Slowly loosen the hydraulic hose connection to the cylinder.
13. Remove the other cylinder pin and remove the cylinder. The cylinder maybe heavy, use proper lifting techniques to lift and handle the cylinder and if needed get assistance in lifting from another person.
14. Measure the distance between the cylinder pin holes and extend the new cylinder to that length before installing.
15. Install the new cylinder in place and install both cylinder pins and retaining clips in place.
16. Reconnect hydraulic hose(s) to the cylinder, and tighten the fittings.
17. Wing cylinder has a special adapter with a small hole drilled in it to control the lowering speed on the wing. Make sure this adaptor is installed. Without this adaptor, the wing can fall rapidly.
18. Make sure the transport lock device(s) are reattached when inserting the cylinder pins.
19. Reconnect the implement hoses to the tractor.
20. Get into the Tractor seat and fasten your seat belt. Clear the area of all persons before attempting to raise the wing. From the tractor seat, start the tractor and operate the control valve to raise the wing.
21. Look for sign of oil leak. If an oil leak exists, shut the tractor down and remove all oil pressure in the lines by moving the valve control handles back and forward.
22. Retighten any lose fittings or connections.
23. If a hose is leaking, replace the hose with a new hose.
24. If there are no leaks raise and lower the wing completely at least three full cycles to remove any air trapped in the circuit.
25. Check the hydraulic reservoir of the tractor to ensure there is sufficient oil.
26. If the wing is to remain in the raised position attached the wing transport latch.

© 2012 Alamo Group Inc.

SKID SHOES

Skid shoes are made of carbon steel to reduce wear and increase service life. Premature wear can be caused by the mower Center or Wing sections being set too low which allows the Wing Skid Shoes to drag on the ground. Dragging the Skid Shoes on the ground or running the Skid Shoes into solid objects can contribute to early frame failure on the mower. Replace worn Skid Shoes as required.

STORAGE

Your rotary cutter represents an investment from which you should get the greatest possible benefit. Therefore, when the season is over, the cutter should be thoroughly checked and prepared for storage so that a minimum amount of work will be required to put it back into operation for the next season. The following are suggested storage procedures:

1. Thoroughly clean the cutter.
2. Lubricate the cutter as covered in Maintenance Section.
3. Tighten all bolts and pins to the recommended torque.
4. Check the cutter for worn or damaged parts. Make replacements immediately.
5. Store the cutter in a clean, dry place with the cutter housing resting on blocks.
6. Use spray touch-up enamel where necessary to prevent rust and maintain the appearance of the cutter.

PROPER TORQUE FOR FASTENERS

The chart lists the correct tightening torque for fasteners. When bolts are to be tightened or replaced, refer to this chart to determine the grade of bolts and the proper torque except when specific torque values are assigned in manual text.

RECOMMENDED TORQUE IN FOOT POUNDS UNLESS OTHERWISE STATED IN THE MANUAL*

NOTE: These values apply to fasteners as received from supplier, dry or when lubricated with normal engine oil. They do not apply if special graphited or molydisulphide greases or other extreme pressure lubricants are used. This applies to both UNF fine and UNC coarse threads.

© 2012 Alamo Group Inc.

TORQUE SPECIFICATIONS

AMERICAN

Bolt Head Markings

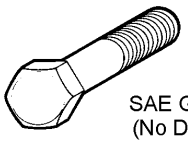

SAE Grade 2
(No Dashes)

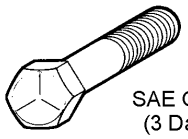

SAE Grade 5
(3 Dashes)

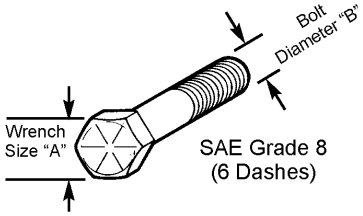

SAE Grade 8
(6 Dashes)

Proper torque for American fasteners.
Recommended Torque in Foot Pounds (Newton Meters).*

WRENCH SIZE (IN.) "A"	BOLT DIAMETER (IN.) "B" AND THREAD SIZE	SAE GRADE 2	SAE GRADE 5	SAE GRADE 8
7/16	1/4 - 2O UNC	6 (7)	8 (11)	12 (16)
7/16	1/4 - 28 UNF	6 (8)	10 (13)	14 (18)
1/2	5/16 - 18 UNC	11 (15)	17 (23)	25 (33)
1/2	5/16 - 24 UNF	13 (17)	19 (26)	27 (37)
9/16	3/8 - 16 UNC	20 (27)	31 (42)	44 (60)
9/16	3/8 - 24 UNF	23 (31)	35 (47)	49 (66)
5/8	7/16 - 14 UNC	32 (43)	49 (66)	70 (95)
5/8	7/16 - 20 UNF	36 (49)	55 (75)	78 (106)
3/4	1/2 - 13 UNC	49 (66)	76 (103)	106 (144)
3/4	1/2 - 20 UNF	55 (75)	85 (115)	120 (163)
7/8	9/16 - 12 UNC	70 (95)	109 (148)	153 (207)
7/8	9/16 - 18 UNF	79 (107)	122 (165)	172 (233)
15/16	5/8 - 11 UNC	97 (131)	150 (203)	212 (287)
15/16	5/8 - 18 UNF	110 (149)	170 (230)	240 (325)
1-1/8	3/4 - 10 UNC	144 (195)	266 (360)	376 (509)
1-1/8	3/4 - 16 UNF	192 (260)	297 (402)	420 (569)
1-5/16	7/8 - 9 UNC	166 (225)	430 (583)	606 (821)
1-5/16	7/8 - 14 UNF	184 (249)	474 (642)	668 (905)
1-1/2	1 - 8 UNC	250 (339)	644 (873)	909 (1232)
1-1/2	1 - 12 UNF	274 (371)	705 (955)	995 (1348)
1-1/2	1 - 14 UNF	280 (379)	721 (977)	1019 (1381)
1-11/16	1-1/8 - 7 UNC	354 (480)	795 (1077)	1288(1745)
1-11/16	1-1/8 - 12 UNF	397 (538)	890 (1206)	1444 (1957)
1-7/8	1-1/4 - 7 UNC	500 (678)	1120 (1518)	1817 (2462)
1-7/8	1-1/4 - 12 UNF	553 (749)	1241 (1682)	2013 (2728)
2-1/16	1-3/8 - 6 UNC	655 (887)	1470 (1992)	2382 (3228)
2-1/16	1-3/8 - 12 UNF	746 (1011)	1672 (2266)	2712 (3675)
2-1/4	1-1/2 - 6 UNC	870 (1179)	1950 (2642)	3161 (4283)
2-1/4	1-1/2 - 12 UNF	979 (1327)	2194 (2973)	3557 (4820)

METRIC

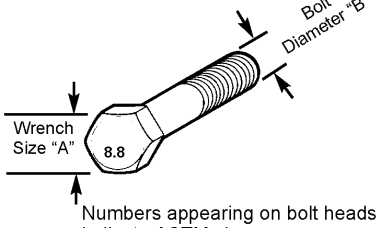

Numbers appearing on bolt heads indicate ASTM class.

Proper torque for Metric fasteners.
Recommended torque in Foot Pounds (Newton Meters).*

WRENCH SIZE (mm) "A"	BOLT DIA. (mm) "B"	ASTM 4.6	ASTM 8.8	ASTM 9.8	ASTM 10.9
8	5	1.8 (2.4)		5.1 (6.9)	6.5 (8.8)
10	6	3 (4)		8.7 (12)	11.1 (15)
13	8	7.3 (10)		21.1 (29)	27 (37)
16	10	14.5 (20)		42 (57)	53 (72)
18	12	25 (34)	74 (100)	73 (99)	93 (126)
21	14	40 (54)	118 (160)	116 (157)	148 (201)
24	16	62 (84)	167 (226)	181 (245)	230 (312)
30	20	122 (165)	325 (440)		449 (608)
33	22		443 (600)		611 (828)
36	24	211 (286)	563 (763)		778 (1054)
41	27		821 (1112)		1138 (1542)
46	30	418 (566)	1119 (1516)		1547 (2096)

*Use 75% of the specified torque value for plated fasteners. Use 85% of the specified torque values for lubricated fasteners.

Mnt-B-0005

© 2012 Alamo Group Inc.

GEARBOX SERVICING

TOOLS NEEDED FOR DISASSEMBLY AND ASSEMBLY OF GEARBOX

MntP-R-0023

1. Slide Hammer Puller
2. Locktite #5900
3. Punch - Long Drift
4. Needle Nose Pliers
5. Screw Driver
6. External Snap Ring Pliers
7. Socket Wrench
8. 9/16 Socket
9. Ball Pin Hammer
10. Pry Bar

WARNING Be certain to clamp or securely support the gearbox and sub-assemblies to prevent injuries to hands and feet due to inadvertent dropping or falling over.

WARNING Always wear safety glasses and gloves to prevent eye and hand injury when chiseling or hammering on metal components. Hardened metal will chip unexpectedly.

WARNING An assembled gearbox is quite heavy. Use a hoist or get help to handle them safely. Lift carefully and properly using your legs to lift - not your back.

NOTICE: *Refer to operator's manual for instructions for proper re-assembly onto the mower deck. Tighten correctly.*

© 2012 Alamo Group Inc.

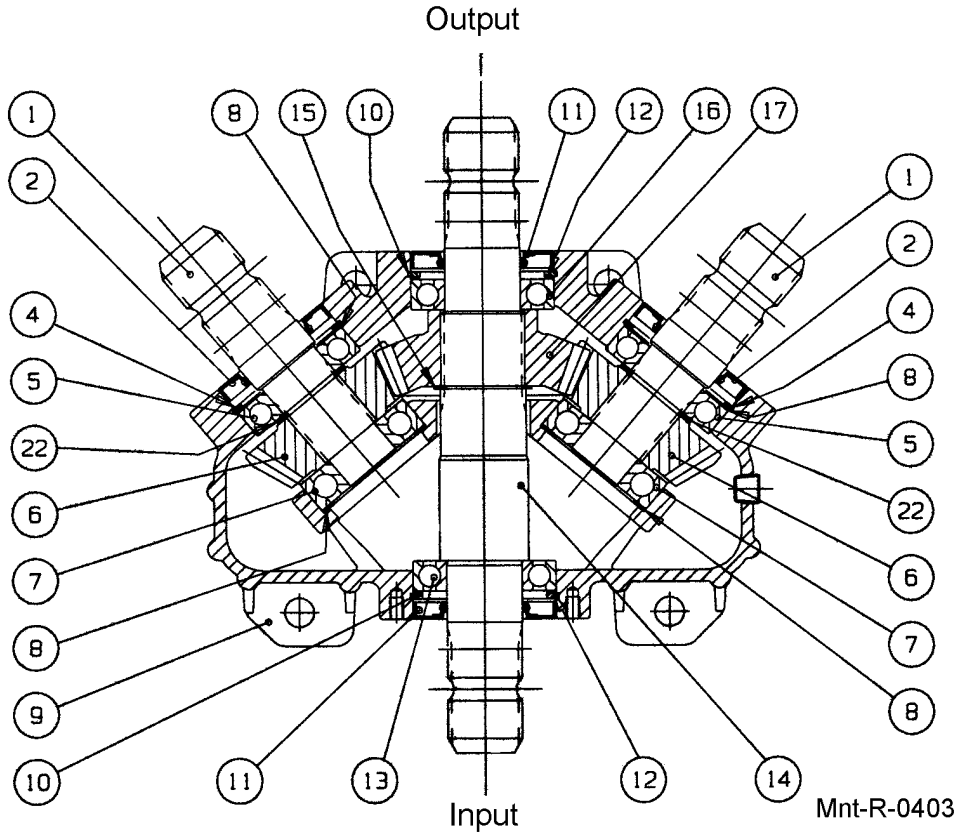

ITEM	QTY	DESCRIPTION
1.	2	Shaft 1-3/4”
2.	2	Oil Seal
3.	2	Plug 3/8” Gas
4.	2	Snap Ring
5.	2	Bearing
6.	2	Pinion Z20
7.	2	Bearing
8.	4	Shim
9.	1	Casing
10.	2	Snap Ring
11.	2	Oil Seal
12.	2	Shim
13.	1	Bearing
14.	1	Shaft
15.	1	Snap Ring
16.	1	Bearing
17.	1	Gear Z24
18.	1	Plug
19.	6	Spring Washer
20.	6	Bolt
21.	1	Cover
22.	2	Snap Ring

© 2012 Alamo Group Inc.

DISASSEMBLY AND ASSEMBLY PROCEDURES - DIVIDER GEARBOX

Refer to Figure Mnt-R-0403 for location of all Item Numbers in procedures.

REMOVE MAIN INPUT SHAFT

Step I.

Place gearbox on appropriate work surface. Remove bolts retaining top cover plate. Remove top cover plate.

Step II.

Drive a sharp object (chisel) through seal #11 on both sides of gearbox and force out of housing.

Step III.

Remove retaining ring #10 on both input and output side of gearbox.

Step IV.

Remove shaft #14 by tapping on output end of shaft thereby forcing shaft out front of gearbox. Gear #17 remains in housing. Remove by simply lifting out. ***Note:*** *When disassembling note location of all shims and tag or identify so that they may be replaced in exact location from which they were removed.*

Step V.

Remove bearing #16 from output side of housing by pressing bearing inward. Remove bearing #21 from shaft by tapping input end on solid object.

REMOVE SIDE OUTPUT SHAFTS

Step I.

Drive sharp object (chisel) through seal #2 and force it out of housing.

Step II.

Remove retaining ring #4. Remove shims #8 which were between bearing #5 and retaining ring #4.

Step III

Insert long punch through hole in housing on input side where shaft was located and place punch end against end of shaft #1. Drive shaft #1 and bearing #5 out of main housing.

Step IV.

Lift gear #6 out of housing. Using same procedure in step #3, drive bearing #7 out of housing.

Step V.

Remove retaining ring #25 from shaft. Remove bearing #5 from shaft by striking end of shaft on solid surface.

Step VI.

Repeat procedure for removal of other short output shaft.

ASSEMBLY PROCEDURE

Assembly is accomplished by reversing disassembly procedure. Short output shafts should be installed first, then main shafts.

Note: *Shims #2, 7, and 15 come in three thickness ranges .012, .016 and .020. Always use the 0.12 shim unless gearbox was set up originally with a thicker shim.*

Note: *Place loctite on all bearing bores to assure that bearings do not turn in housing.*

© 2012 Alamo Group Inc.

SIDE OUTPUT SHAFTS

Step I.
Insert shims #8 into inner bearing bore if any were present at disassembly. Press bearing #7 into place.

Step II.
Insert gear #6 into housing. Press bearing #5 onto shaft. Insert retaining ring #22 onto shaft against bearing #5.

Step III.
Insert shaft through housing, gear, and press into inner bearing bore #7.

Step IV.
Install shims #8, if any were present at disassembly. Insert retaining ring #4.

Step V.
Check for shaft end play by tapping on each end of shaft. If noticeable thicker shim #8 must be installed. Remove retaining ring #4 and insert thicker shim or add a shim. Reinstall retaining #4.

Step VI.
Repeat procedure for other short output shaft. ***Note:*** *Be sure and install gear #17 when installing last gear #6.*

MAIN INPUT SHAFT

Step I.
Insert main shaft #14 into main housing #9 through rear bearing bore and gear #17.

Step II.
Press rear or output bearing #16 into place, insert any shims present during disassembly and insert retaining ring #10.

Step III.
Press front or input bearing #13 into place, insert any shims present during disassembly and insert retaining ring #10.

Step IV.
Check for shaft end play by tapping on each end of shaft. If present install thicker shim or more shims between bearing #13 and retaining ring #10 on front or input side of gearbox.

Step V.
Check gear backlash between center gear #17 and each output shaft gear #6. Backlash should be between 0.012 and 0.022 inches. To increase backlash remove shim from between bearing #16 and retaining ring #10 on output side of gearbox. Place this shim between bearing #13 and retaining ring #10 on input side of gearbox. To reduce backlash procedure is reversed, remove shims from front side and place on output side.

Step VI.
Press in all seals and install top cover plate. Fill with proper gear lubricant.

© 2012 Alamo Group Inc.

Gearbox Input Shaft Rear Bearing

Remove bearing (Ref. #25 **Figure Mnt-R-0211**) from inside main housing. A special slide hammer puller (PROTO No. 4056) or equal may be required to remove bearing. Press in new bearing using a driving tube or pipe with approximate same OD. as bearing cup. Seat outer race of bearing against shoulder in housing.

GEARBOX ASSEMBLY STEPS

Clean and scrape all gasket surfaces.

A.

1. Insert output shaft assembly into main housing and press into place.

***NOTE**: Use pipe or tube with approximate same OD. as bearing cup and press into place by striking or pressing on tube.*

2. Prelube lower bearing.
3. Place lower gasket in place and then carefully slide bearing retainer cap assembly down shaft.
4. Install bolts and lockwashers and torque to 40-50 ft. lbs.

B.

1. Assemble three shims onto input shaft housing. Insert input shaft assembly into main housing by installing shaft end into bearing in main housing. It may be necessary to rotate shaft to align gear teeth so that housing will install completely. Note position of shield mounting holes in housing.
2. Install washers and bolts and torque to 40-50 ft. lbs.
3. Gear backlash check procedure (**Figure Mnt-R-0044**). Install 1/2 x 3 capscrew through shear pin hole. Install flat washers to take up 1/2" space and then install nut and tighten so bolt cannot move. Clamp gearbox to something solid so it will not move when shaft is rotated by hand. Measure 1-1/2 inches from side of shaft to point on bolt and mark (See **Figure Mnt-R-0044**). Set dial indicator at marked point, then while holding bottom shaft so it will not rotate, rotate the input shaft back and forth noting extreme indicator reading. If total indicator deflection reading does not fall between.006 to.018, then shims (Ref. #12 **Figure Mnt-R-0211**) will have to be added to increase backlash or deleted to decrease backlash.

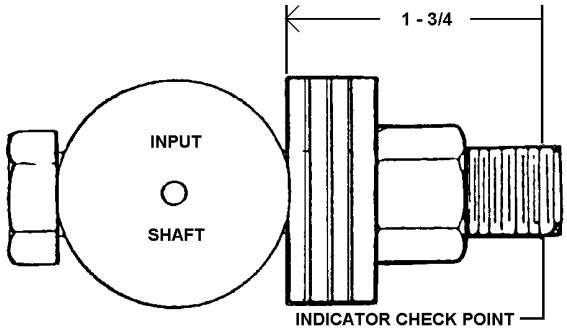

Mnt-R-0044

© 2012 Alamo Group Inc.

GEARBOX SERVICING

WARNING Diassembled shims must be assemble in the same positions.

TOOLS NEEDED FOR DISASSEMBLY AND ASSEMBLY OF GEARBOX

-Wrench n° 13-17-19
-Wrench n°17-36
-Wrench n°13-19
-Chisel
-Snap Ring Pliers
-Hammer
-Wrench n°36
-Pipe
-Extractor
-Torquemeter
-Dynamometric wrench

1. Housing
2. Crown Gear
3. Roller Bearing (35 x 72 x 18.25)
4. Dust Lip (35 x 72 x 10)
5. Input Shaft
6. Snap Ring (72 x 75 x 2.5 for holes)
7. Shim Kit (60.3 x 71.7)
8. Castle Nut (M20 x 1)
9. Shim Kit (30.3 x 44)
10. Flat Washer (25 x 44 x4)
11. Castle Nut (M24 x 2)
12. Flat Washer (21 x 37 x 3)
13. Protective Flat Washer (40.4x79.9x1)
14. Dust Lip (40 x 80 12)
15. Roller Bearing (30 x 72 x 2.75)
16. Roller Bearing (40 x 80 x 19.75)
17. Output Shaft
18. Pinion Gear
19. Ball Bearing
20. Oil Cap
21. Snap Ring (81 x 82.8 x 2)
22. Name Plate
23. Cotter PIn (4 x 40)
24. Top Cover
25. Bolt M10 x 15 HHB
26. 3/8” Gas Solid Plug

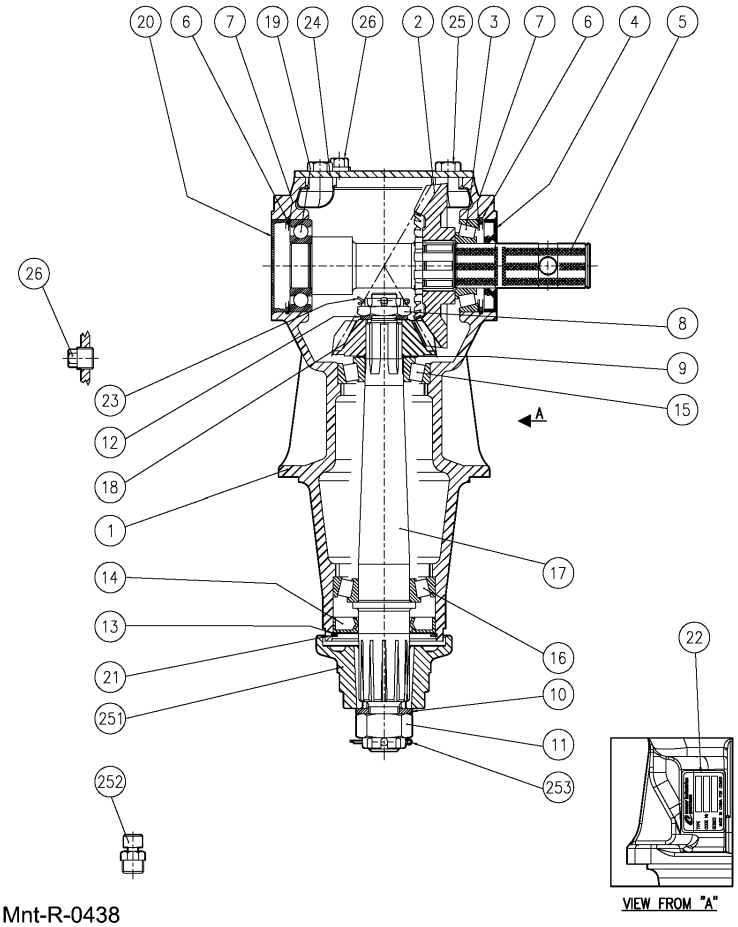

Mnt-R-0438

Supplied Separately

251. Bush
252. 3/8” Gas Oil Breather Plug
253. Cotter Pin (5 x 50)

© 2012 Alamo Group Inc.

Disassembly

1. Unscrew plugs (252), (26) and emply the oil from gearbox.
2. Unlock bolts (25) and take away cover (24).

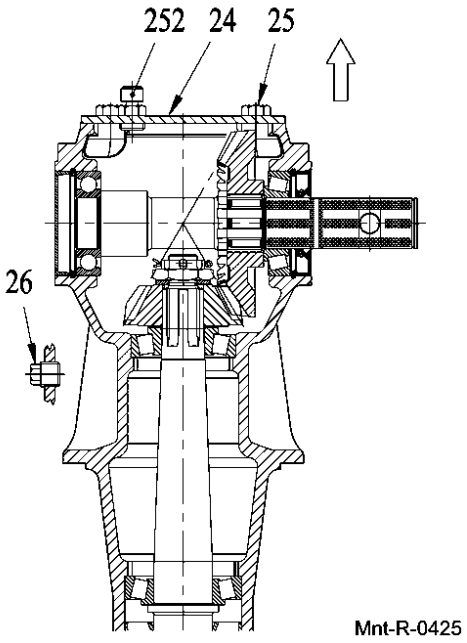

Mnt-R-0425

3. Disassemble oil seal (4), cap (20) using a chisel and hammer.
4. Disassemble snap rings (6), shims (7).
5. Hit the shaft (5), from side A, using chisel and hammer and disassemble it from housing (1).
6. Pick up crown wheel (2) and inner ring (3).
7. Disassemble bearing (19), using pipe and hammer, from the shaft (5).
8. Disassemble inner ring (3) from the shaft (5), using chisel and hammer.

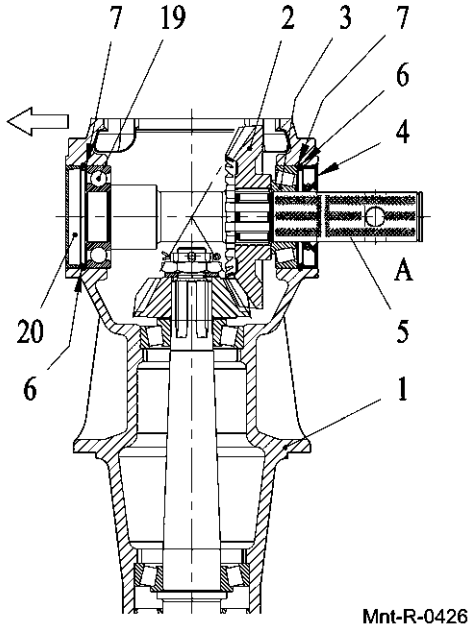

Mnt-R-0426

© 2012 Alamo Group Inc.

9. Straighten cotter pin (23).
10. Extract cotter pin (253), unscrew nut (11), disassemble bolt washer (10) and bush (251).
11. Disassemble snap ring (21), take away protective washer (13).
12. Disassemble oil seal (14), using chisel and hammer.
13. Disassemble outer ring (3) from housing, using a pipe and hammer.

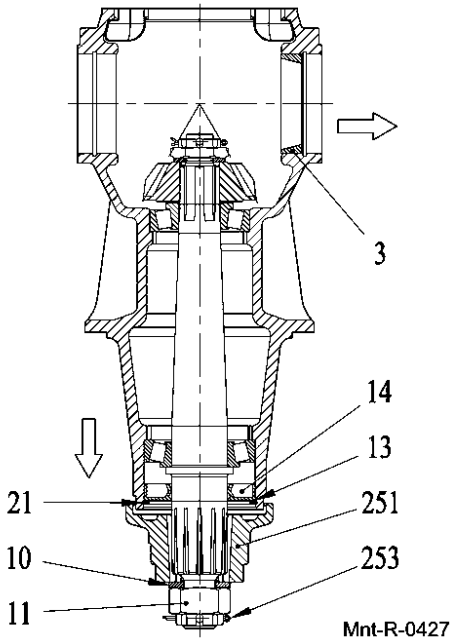

Mnt-R-0427

14. Straighten cotter pin (23).
15. Extract cotter pin (23), unscrew castle nut (8).
16. Disassemble shim (12), pinion (18), shims (9) using and extractor if necessary.
17. Hit the shaft (17) from side B and extract it from housing (1), using a chisel and hammer, pick up inner ring (15).
18. Extract inner ring (16) from shaft (17), using a chisel and hammer.

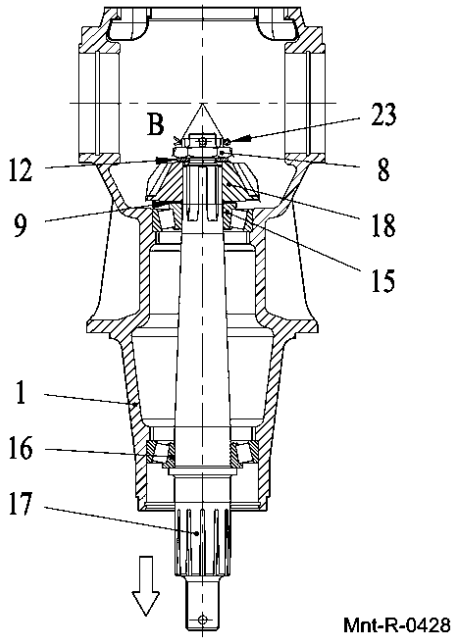

Mnt-R-0428

© 2012 Alamo Group Inc.

19. Extract outer rings (15), (16) using a chisel and hammer or an extractor.

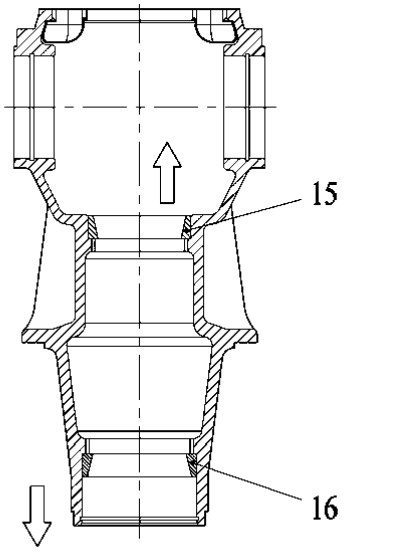

Mnt-R-0429

Assembly

NOTE: *-Clean all the components from remaining oil, grease and silicone.*
-Replace any particular damage.
-When assembling the bearings, pay attention to not make any pressure on the rollers or cages in order to avoid any damage.
-When assembling oil seals, avoid contact with cutting parts in order to prevent any damage to teh inner lip.
-When assembling the cap, use a cylindrical shaft of same diameter of the cap.

1. Assemble inner ring (16) on shaft (17) using pipe and hammer.
2. Assemble outer rings (15), (16) inside housing (1), using pipe and hammer.
3. Insert shaft (17) inside housing (1).

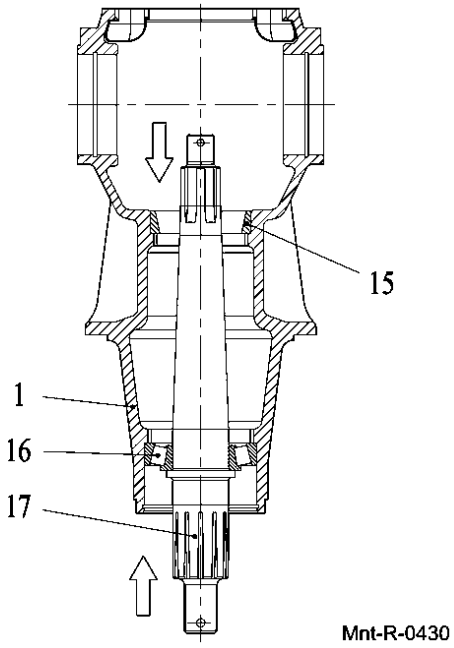

Mnt-R-0430

© 2012 Alamo Group Inc.

4. Assemble inner ring (15) using pipe and hammer, shim (9), pinion (18) using pipe and hammer, shim (12) castle nut (8) and tighten manually.
5. Check the assembled axis preload, using a torquemeter, that must be to 5÷10 kgcm.
6. Assemble cotter pin (23) and bend it, unscrew the castle nut (8) against cotter pin (23).
7. Hit the shaft (17) in order to set the axis, from both sides, using a hammer.
8. If necessary change the shims setting (9) and repeat the assembling previous phases, in order to obtain the right value.
9. Caulk the cotter pin (23) using a pliers.

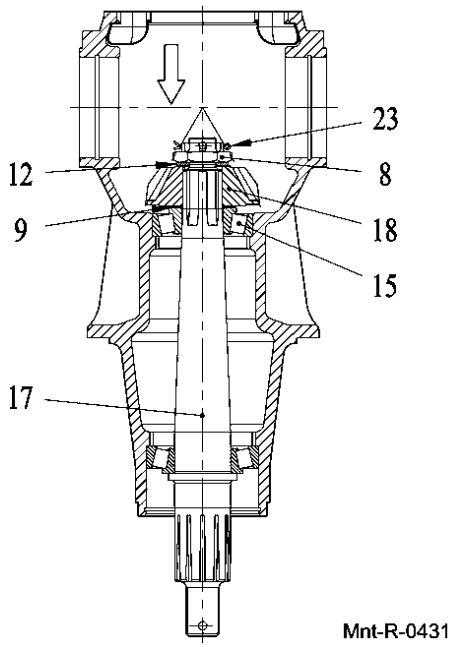

Mnt-R-0431

10. Assemble snap ring (6) using pliers, shims (7) and outer ring (3) using pipe and hammer.
11. Insert inner ring (3) and crown wheel (2) inside the housing (1).

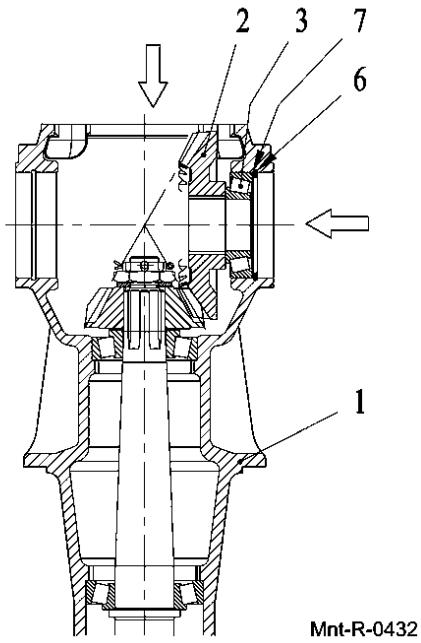

Mnt-R-0432

© 2012 Alamo Group Inc.

12. Assemble bearing (19) on the shaft (5), using pipe and hammer.
13. Assemble pre-mounted shaft (5) inside housing (1), using chisel and hammer, bearing (19) using pipe and hammer, snap ring (6).
14. Hit the shaft (5) in order to set the axis, from both sides, using a hammer.
15. Check the assembled axis preload (K), using a torquemeter.
16. Disassemble snap ring (6).
17. Assemble shims (7) and snap ring (6).
18. Hit the shaft (5) in order to set the axis, from both sides, using a hammer.
19. Check the assembled axis preload, (W), using a torquemeter.
20. The difference between the value (W) and the value (K) is the axis preload that must be to 1÷5 kgcm.
21. If the value is not correct disassemble the snap ring (6) and change the shims (6) setting, reassemble the snap ring (6) and repeat the setting axis in order to obtain the right preload.

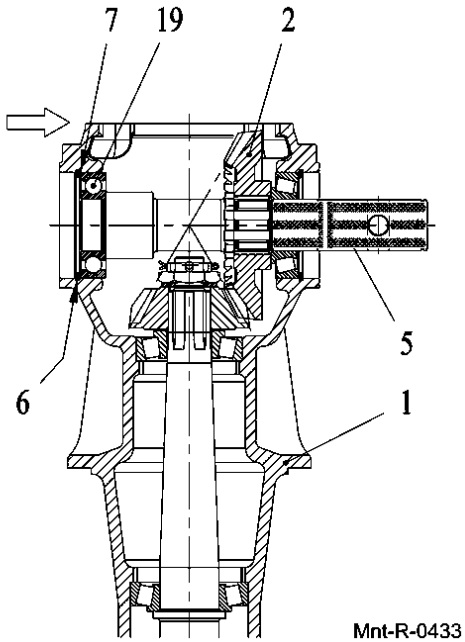

Mnt-R-0433

22. In order to test the right mesh between the gears, use a color like prussian blue on the gear's toothing.
23. Rotate manually the shaft (5).
24. Verify the right mesh between gears, (see the technical specifications on page 12), the value must be to 0.16 ÷ 0.42 mm.
25. In order to have the correct backlash, change shims set (7), (Please be aware that when you change the shims set you will also have to re-set the preload).

26. Assemble cap (20), oil seal (4), using pipe and hammer.
27. Put a silicone film between contact surfaces of the housing and cover (24) than assemble cover (24), bolts (25) and tighten to 5÷6.4 kgm.

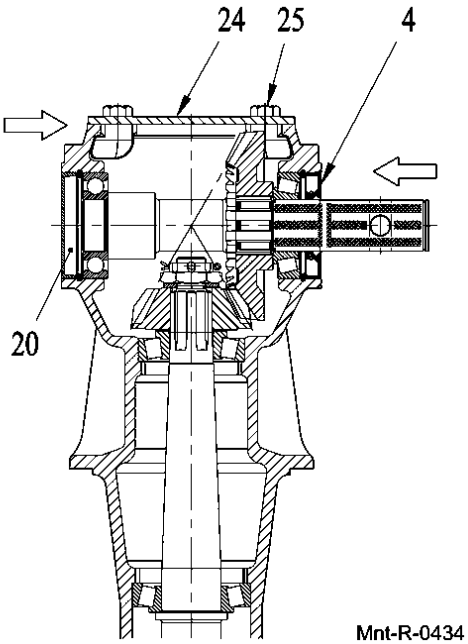

Mnt-R-0434

© 2012 Alamo Group Inc.

28. Apply a Bisulphide Molybdenum grease on dust lip of oil seal (14).
29. Assemble oil seal (14), protective washer (13), using a pipe and hammer.
30. Assemble snap ring (21).
31. Assemble bush (251), bolt washer (10).
32. Assemble castle nut (11) and tighten to 50÷60 kgm.
33. Assemble cotter pin (253).
34. Bend cotter pin (253).

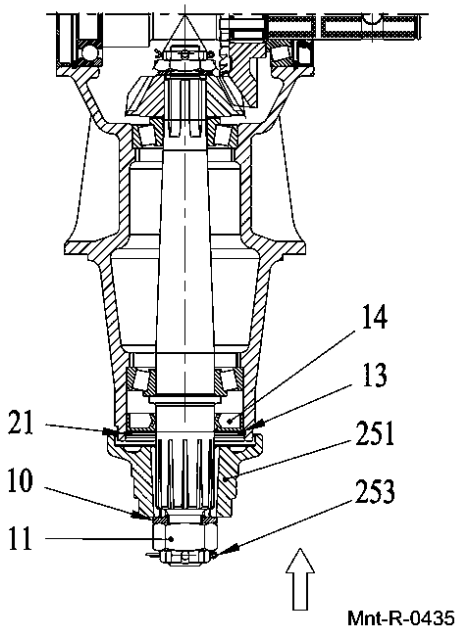

Mnt-R-0435

35. Assemble plug (26) and tighten to 3 kgm.
36. In order to prevent any leak of oil, make the following test: insufflate from the hole plug (252) to pressure bar 0.35 and put the gearbox in a tank; if you prefer you can verify any pressure drop with a manometer (scale about 0.6 bar) for 10 minute
37. Dry the gearbox
38. Fill the gearbox with oil SAE 90 EP.
39. Assemble the plug (252) and tighten to 3 kgm.

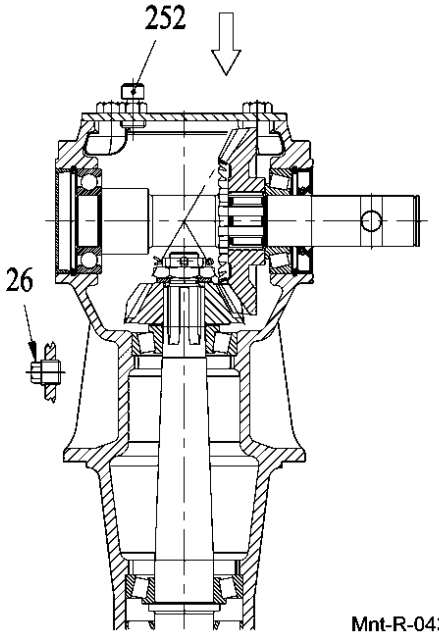

Mnt-R-0436

© 2012 Alamo Group Inc.

© 2012 Alamo Group Inc.

SEGURIDAD

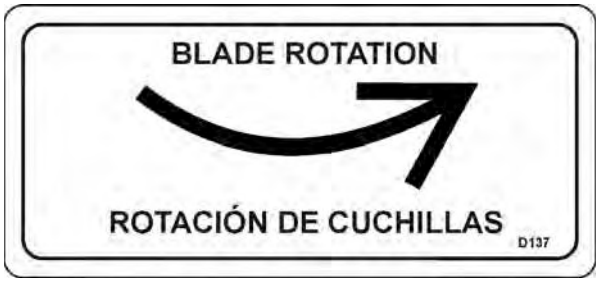

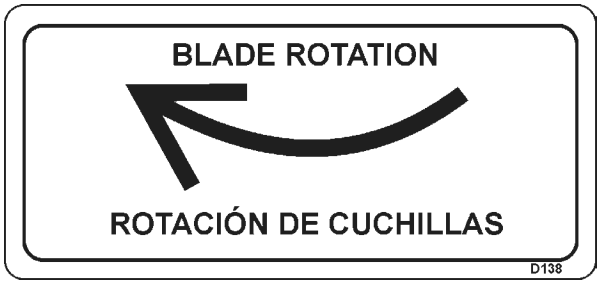

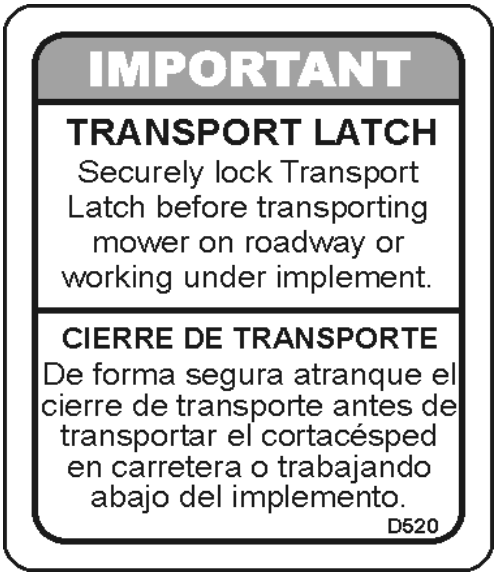

© 2012 Alamo Group Inc.

⚠ DANGER

TO AVOID SERIOUS INJURY OR DEATH FROM DRIVELINE CONTACT, DRIVELINE SEPARATION OR PTO STUB SHAFT FAILURE:

- STOP, LOOK and LISTEN for rotating motion before approaching implement.
- STAY AWAY and KEEP hands, feet and body AWAY from rotating parts until all moving elements have stopped.
- ALWAYS shut off PTO before dismounting.
- DO NOT operate if PTO shields are damaged or missing.
- PUSH AND PULL on yoke until collar clicks and locks yoke in place.
- CHECK driveline guards for free rotation and sufficient overlap to avoid unshielded areas.
- DO NOT USE PTO ADAPTER

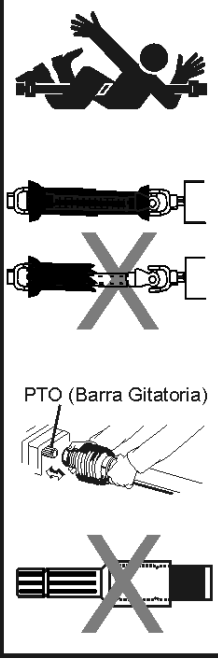

⚠ PELIGRO

PARA EVITAR LESION SERIA O MUERTE POR CONTACTO A LA LÍNEA DE CONDUCCIÓN, SEPARACION DE LÍNEA DE CONDUCCIÓN O EL FRACASO DEL EJE DE PTO:

- PARE, MIRE y ESCUCHE por el movimiento de rotación antes de acercarse al implemento.
- MANTENGASE ALEJADO y MANTENGA manos, pies y cuerpo LEJOS de partes girando, hasta que todos los elementos de movimiento se han parado.
- SIEMPRE apage la Toma De Fuerza (Barra Gitatoria) antes de desmontar.
- NO opere si las cubiertas de Toma De Fuerza (Barra Gitatoria) estan dañadas.
- EMPUJE Y JALE el yugo hasta que el collar de fijación hace clic y el yugo se traba en lugar.
- REVISE las guardias de línea de conducción por giracion libre y sufficiente traslape para evitar areas sin cobertura.
- NO UTILICE UN ADAPTOR PARA LA TOMA DE FUERZA (Barra Gitatoria).

D388 SP

⚠ WARNING

OPERATE THIS MACHINE AT

540 RPM

TRACTOR PTO SPEED ONLY. Overspeeding PTO may cause component failure resulting in bodily injury. TRACTOR PTO ROTATION: CLOCKWISE

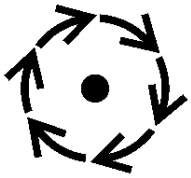

⚠ ADVERTENCIA

OPERE ESTA MÁQUINA A

540 RPM

SOLAMENTE OPERE ESTA MÁQUINA A LA VELOCIDAD DE PTO (TOMA DE FUERZA O BARRA GITATORIA) DEL TRACTOR DE 540 RPM. El sobre exceso de velocidad de PTO puede causar el fracaso de componente que resultara en lesión. ROTACION DE PTO DEL TRACTOR: EN SENTIDO HORARIO

⚠ WARNING

OPERATE THIS MACHINE AT

1000 RPM

TRACTOR PTO SPEED ONLY. Overspeeding PTO may cause component failure resulting in bodily injury. TRACTOR PTO ROTATION: CLOCKWISE

D401

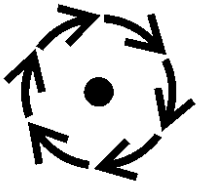

⚠ ADVERTENCIA

OPERE ESTA MÁQUINA A

1000 RPM

SOLAMENTE OPERE ESTA MÁQUINA A LA VELOCIDAD DE PTO (TOMA DE FUERZA O BARRA GITATORIA) DEL TRACTOR DE 1000 RPM. El sobre exceso de velocidad de PTO puede causar el fracaso de componente que resultara en lesión. ROTACION DE PTO DEL TRACTOR: EN SENTIDO HORARIO

© 2012 Alamo Group Inc.

SEGURIDAD

⚠ WARNING

Non-genuine parts can fail catastrophically.
TO AVOID SERIOUS INJURY OR DEATH:

- ONLY use genuine BUSH HOG replacement parts.
- Non-genuine parts can fail creating hazardous conditions for operator and bystanders.

Contact local dealer or BUSH HOG about repair parts at:

www.algqr.com/bpm

2501 Griffin Ave.,Selma, Al 36701
Customer Service: 800-363-6096.
Email: contactus@bushhog.com

⚠ ADVERTENCIA

Partes que no son auténticas pueden fallar catastróficamente.
PARA EVITAR LESION SERIA O MUERTE:

- Use SOLAMENTE las partes de reemplazo autenticas de BUSH HOG.
- Partes que no son autenticas pueden fallar y causar conidiciones peligrosas para el operador y personas presentes.

Contacte a su distribuidor local o BUSH HOG sobre partes de reparo a:

www.algqr.com/bpm

2501 Griffin Ave.,Selma, Al 36701
Servicio al Cliente: 800-363-6096.
Correo Electronico: contactus@bushhog.com

IMPORTANT

BE AWARE
BE ALERT
BE ALIVE

BE TRAINED
Before Operating this Mower

To prevent serious injury to yourself and/or bystanders, be trained in Safe Mowing Practices.

Alamo Group Companies, Alamo Industrial, Bush Hog, M&W, Rhino, Schulte, Tiger and Terrain King as well as AEM and FEMA provide training material that is critical for your Safety and the Safety of others when operating this equipment. Make these Safety Procedures an important part of every workday.

Read and understand the Operator's Manual.
Do not let untrained individuals operate this equipment.

Contact your Dealer, AEM (www.aem.org), FEMA (314-878-2304, www.FarmEquipment.org), or Alamo Group (www.Alamo- Group.com) for information on training material or courses that provide training in Safer Operating Practices for Mowers.

www.algqr.com/bve

IMPORTANTE

ESTE CONSCIENTE
ESTE ALERTO
ESTE VIVO

SEA ENTRENADO
Antes de Funsionar Cortacésped

Para prevenir lesiónes graves a usted y/o personas presentes, sea entrendado en la Practica de Segar Seguro.

Companias de Alamo Group, Alamo Industrial, Bush Hog, M&W, Rhino, Schulte y Tiger asi como AEM y FEMA proporcionan material para entrenar que es esencial para su seguridad y la seguridad de otros al operar este equipo. Haga estos procedimientos de seguridad una parte importante de su dia de trabajo.

www.algqr.com/bvs

Lea y entienda el Manual de Operadores.
No permita que personas sin entrenamiento funcionen este equipo.

Contacte a su distribuidor, AEM (www.aem.org), FEMA (314-878-2304, www.FarmEquipment.org), o Alamo Group (www.Alamo-Group.com) para la informacion sobre el material de entrenamiento o cursos que ofrecen el entenamiento de Prácticas de Operación para Cortadoras.

D559 SP

© 2012 Alamo Group Inc.

⚠ DANGER

CRUSHING HAZARD-WING FALLING

TO AVOID SERIOUS INJURY OR DEATH BEFORE REMOVING SHIPPING STRAPS:

- FILL WING CYLINDERS with oil
- ENGAGE TRANSPORT Bars/Latches.
- CLEAR AREA OF PERSONS near or under wings.

⚠ PELIGRO

RIESGO DE APALSTAMIENTO – POR CAÍDA DE ALA

PARA EVITAR LESION SERIA O MUERTE ANTES DE QUITAR LAS CORREAS DE TRANSPORTE:

- LLENE LOS CILINDROS DE ALA del petróleo
- APLIQUE la barra/cierre de TRANSPORTE.
- DESOCUPE EL AREA DE PERSONAS cerca o debajo de las alas.

D519

⚠ DANGER

Crushing Hazard - Injury or Death

TO AVOID SERIOUS INJURY OR DEATH:

- STAND CLEAR when removing transport latch, lowering or raising wings.
- CLEAR AREA of bystanders before lowering implement wings.
- IMPLEMENT CAN FALL from hydraulic failure or accidental operation of controls.
- BLOCK UP and securely support equipment before putting hands, feet or body under raised equipment or lifted components.
- SECURELY ENGAGE transport latch before transportation or working under wing.
- FILL CYLINDERS with oil before attempting to lower implement wings.
- DO NOT OPERATE in transport position or with wings off ground.

⚠ PELIGRO

Riesgo de Aplastamiento Lesion o Muerte

PARA EVITAR LESION SERIA O MUERTE:

- MANTENGASE LEJOS al quitar el cierre de transporte, bajando y devantando las alas.
- DESOCUPE EL AREA de personas presentes antes de bajar las alas del implemento.
- EL IMPLEMENTO PUEDE CAER del fracaso hidráulico o por operación accidental de controles.
- BLOQUEE y soporte con seguridad antes de poner manos, pies o cuerpo debajo del equipo de componentes levantados.
- CON SEGURIDAD ACTIVE el cierre de transporte antes de la transportacion o trabajar debajo de las alas.
- LLENE LOS CILINDROS con aceite antes de intentar de bajar las alas del implemento.
- NO OPERE en posicion de transporte o con las alas devantadas del la tierra.

00753840

⚠ DANGER

THROWN OBJECT HAZARD

TO AVOID SERIOUS INJURY OR DEATH:
DO NOT OPERATE if Thrown Object Shielding is damaged or missing.

MAINTAIN Thrown Object Shielding HERE

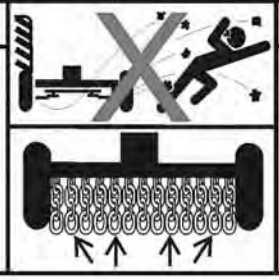

⚠ PELIGRO

RIESGO DE OBJETOS LANZADOS

PARA EVITAR LESION SERIA O MUERTE:
NO OPERE si la Cubierta de Objetos Lanzados esta dañada o falta.

MANTENGA la Cubierta de Objetos Lanzados AQUI

D614

© 2012 Alamo Group Inc.

SEGURIDAD

⚠ WARNING | ⚠ ADVERTENCIA

TO AVOID EQUIPMENT AND GRASS FIRES:

- CLEAR AWAY grass or debris from slip clutches, gearboxes, drivelines and decks.

TO AVOID FIRE IGNITION:

- DO NOT ALLOW BLADES TO CONTACT rocks, metal or solid objects.

PARA EVITAR INCIENDOS DE EQUIPO Y CÉSPED:

- QUITE el césped o escombros de embrague deslizante, caja de engranajes, líneas de conducción y cubiertas.

PARA EVITAR INCIENDOS POR IGNICIÓN:

- NO PERMITA QUE LAS LAMINAS CONTACTEN piedras, metal o objectos solidos.

D390_3

IMPORTANT | IMPORTANTE

Required for Standard Pull Type Units.

Requerido por Unidades de Typo Tirón Estandar.

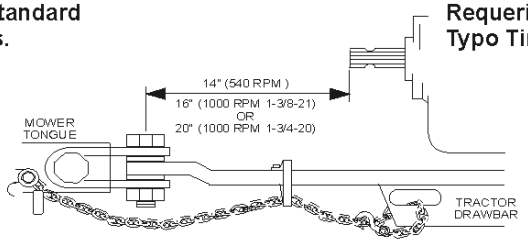

Attach Safety Chain securely.
Coloque la Cadena de Seguridad seguramente.

D390_4

⚠ WARNING | ⚠ ADVERTENCIA

TO AVOID SERIOUS INJURY OR DEATH FROM BLADE ATTACHMENT FAILURE:

- Torque blade bolt to 600 ft lbs.
- ALWAYS replace blades in pairs.
- ALWAYS replace blades with new bolts and nuts.

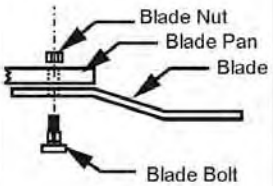

PARA EVITAR LESION SERIA O MUERTE POR EL FALLO DEL ACOPLAMIENTO DE LAS CUCHILLAS:

- Apriete los tornillos a torsión de 600 libras pie.
- Siempre reemplace las cuchillas en pares.
- SIEMPRE reemplace las cuchillas con tornillos y tuercas nuevas.

D534

© 2012 Alamo Group Inc.

⚠ WARNING

TO AVOID SERIOUS INJURY OR DEATH FROM HIGH PRESSURE HYDRAULIC OIL LEAKS PENETRATING SKIN:

- DO NOT OPERATE equipment with oil or fuel leaks.
- KEEP all hydraulic hoses, lines and connections in good condition and tight before applying system pressure.
- Relieve hydraulic pressure before disconnecting lines or working on the system.
- REMOVE and replace hose if you suspect it leaks. Have dealer test it for leaks.

HIGH PRESSURE FLUID LEAKS CAN BE INVISIBLE. WHEN CHECKING FOR HYDRAULIC LEAKS AND WORKING AROUND HYDRAULIC SYSTEMS:

- DO NOT use hands to check for leaks.
- ALWAYS WEAR safety glasses and impenetrable gloves.
- USE paper or cardboard to search for leaks.
- KEEP hands and body AWAY from pin holes and nozzles ejecting hydraulic fluid.
- Hydraulic fluid may cause gangrene if not surgically removed immediately by a doctor familiar with this form of injury.

⚠ ADVERTENCIA

PARA EVITAR LESION SERIA O MUERTE POR LA PENETRACION A LA PIEL POR ALTA PRESION DE ACEITE HYDRÁULICO:

- NO OPERE el equipo con fugus de aceite o combustible.
- MANTENGA todas las mangueras hydráulicas, líneas y conexiones en buenas condiciones y apretadas antes de aplicar presión al sistema.
- Releve la presión hidráulica antes de desconectar las líneas o trabajar en le sistema.
- QUITE y reemplace la manguera si sospecha que hay fuga.

FUGAS DE ALTA PRESIÓN PUEDEN SER INVISIBLE. AL VERIFICAR POR FUGAS HIDRAULICAS Y TRABAJANDO ALREDEDOR DE SISTEMAS HIDRAULICOS:

- NO use las manos para verificar si hay agujeros.
- SIEMPRE USE lentes de seguridad y guantes impenetrables.
- USE papel o un cartón para buscar agujeros.
- NO USE las manos o partes del cuerpo para buscar agujeros.
- MANTEGA manos y cuerpo LEJOS de agujeros de alfiler y boquillas que expulsan el liquido hidráulicos.

D390_1

⚠ WARNING

TO AVOID SERIOUS INJURY AND DEATH WHEN TOWING EQUIPMENT:

- DO NOT TOW with trucks or other vehicles.
- ONLY transport with properly sized and equipped tractor. (see Operator's Manual)
- ATTACH implement SAFETY CHAIN to tractor.
- CHECK SMV sign, reflectors and warning lights for visibility behind unit.
- TURN ON tractor flashing warning lights.

TO AVOID LOSS OF TOWING CONTROL:

- DO NOT tow at speeds over 20 mph.
- REDUCE SPEED on inclines, in turns and in poor towing conditions.

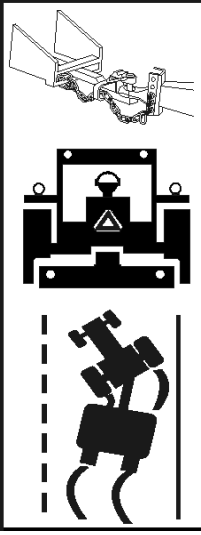

⚠ ADVERTENCIA

PARA EVITAR LESION SERIA O MUERTE AL REMOLCAR EL EQUIPO:

- NO REMOLQUE con camion o cualquier otro vehículo.
- SOLO transporte con un tractor bien equipado y de tamaño adecuado (vea el Manual de Operador)
- APILIQUE LA CEDENA DE SEGUIRDAD al tractor.
- VERIFIQUE EL SMV, reflectors, y luces intermitentes de advertencia pueden ser vistos claramente por detras de la unidad.
- PRIENDA las luces intermitentes de advertencia.

PARA EVITAR PERDIDA DE CONTROL DE REMOLQUE:

- NO remolque en velocidades arriba de 20 mph.
- REDUZCA LA VELOCIDAD en inclinas, en vueltas y en la pobres condiciones de remolque.

D390_2

© 2012 Alamo Group Inc.

⚠ PELIGRO

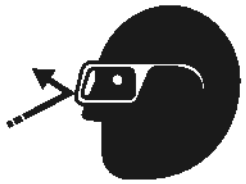

PARA EVITAR LESION SERIA O MUERTE:

- LEA Y ENTIENDA el Manual de Operador proporcionado, signos de seguridad y calcomanias informativas para el tractor y implemento antes de operar el equipo.
- CONTACTE AL DISTRIBUIDOR imediatamente si no tiene los manuales.
- CONTACTE AL DISTRIBUIDOR para que le explique cualquier instrucciónes que no entiende completamente.
- SIEMPRE USE lentes de seguridad.
- USE un casco, zaptos de seguridad y guantes para su protection cuando esta operando el equipo.

⚠ DANGER

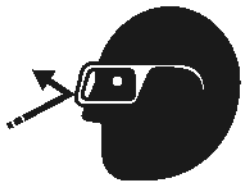

TO AVOID SERIOUS INJURY OR DEATH:

- READ AND UNDERSTAND the provided Operator's Manuals, safety signs and information decals for tractor and implement before operating equipment.
- CONTACT DEALER immediately if you do not have manuals.
- CONTACT DEALER to explain any instructions not fully understood.
- ALWAYS WEAR safety glasses.
- WEAR hard hat, safety shoes and gloves for protection when operating equipment.

D549 SP 5

© 2012 Alamo Group Inc.

⚠ PELIGRO

Riesgo de Aplastamiento - Lesion o Muerte

PARA EVITAR LESION SERIA O MUERTE:

- USE un tractor equipado con Estructura Protectora Contra Vuelcos ("ROPS") incluyendo barra antivuelco y cinturon de seguridad. Mantenga la barra antivuelco en la posicion elevada.
- PERMANEZCA ALEJADO al quitar el seguro de transporte, y al bajar o subir las alas.
- EL IMPLEMENTO SE PUEDE CAER por el mal funcionamiento hidraulico o operacion accidental de los controles.
- BLOQUEE y soporte con seguridad el equipo antes de poner manos, pies o cuerpo debajo del equipo o componentes levantados.

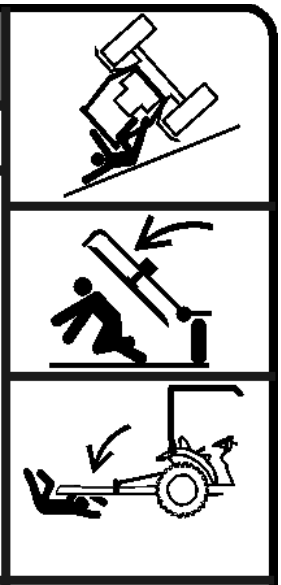

⚠ DANGER

Crushing Hazard - Injury or Death

TO AVOID SERIOUS INJURY OR DEATH:

- USE tractor equipped with Rollover Protective Structure (”ROPS”) including roll bar and seat belt. Keep roll bar in raised position.
- STAND CLEAR when removing transport latch, lowering or raising wings.
- IMPLEMENT CAN FALL from hydraulic failure or accidental operation of controls.
- BLOCK UP and securely support equipment before putting hands, feet or body under raised equipment or lifted components.

D549 SP 4

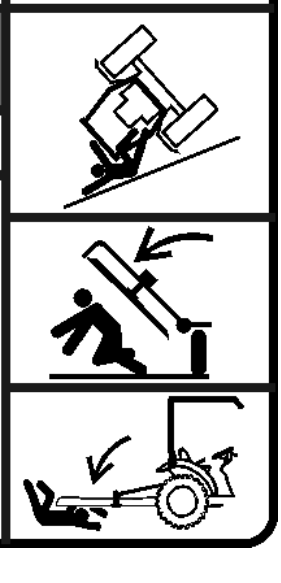

© 2012 Alamo Group Inc.

⚠ PELIGRO

RIESGO DE ENREDAMIENTO

PARA EVITAR LESION SERIA O MUERTE:

- NO opere sin la cubierta protectora en su lugar y en buen estado. Toma De Fuerza (Barra Gitatoria) y guardias de caja de engranaje son SUJETO AL ESGASTE.
- MANTENGASE ALEJADO y MANTENGA manos, pies y cuerpo LEJOS de las cuchillas girando, líneas de conducción, y partes que siguen moviendose depués de que el poder es apagado. ESPERE hasta que todos los elementos móviles se han parado.
- SIEMPRE REEMPLACE CUBIERTAS que han sido quitadas para servicio o mantenimiento.
- DETENGASE, OBSERVE y ESCUCHE por el movimiento de rotación antes de acercarse al implemento.
- NO PISE EN las líneas de conducción o cubiertas.

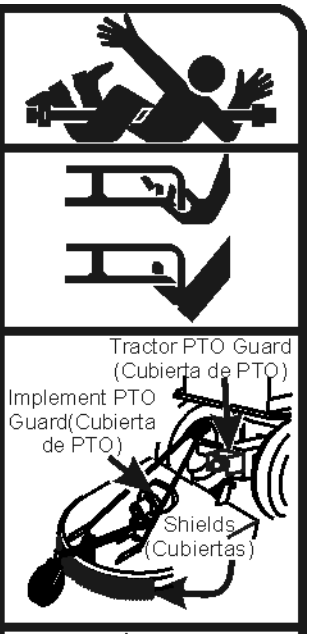

⚠ DANGER

ENTANGLEMENT HAZARD

TO AVOID SERIOUS INJURY OR DEATH:

- DO NOT operate without guards in place and in good condition. PTO and gearbox guarding are SUBJECT TO WEAR.
- STAY AWAY and KEEP hands, feet and body AWAY from rotating blades, drivelines and parts that continue to move after power shut-off. WAIT until all moving elements have stopped.
- ALWAYS REPLACE GUARDS that have been removed for service or maintenance.
- STOP, LOOK and LISTEN for rotating motion before approaching implement.
- DO NOT STEP ON drivelines or guards.

D549 SP 3

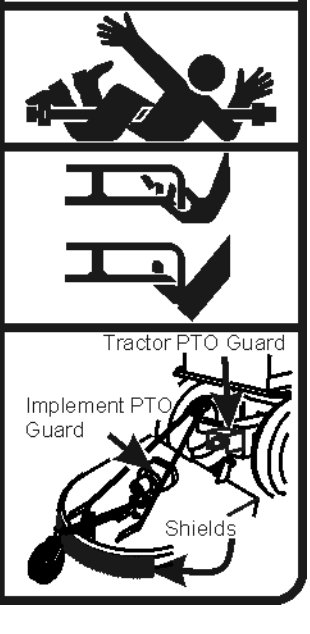

© 2012 Alamo Group Inc.

⚠ PELIGRO

RIESGO DE ENREDAMIENTO

PARA EVITAR LESION SERIA O MUERTE:

- NO opere sin la cubierta protectora en su lugar y en buen estado. Toma De Fuerza (Barra Gitatoria) y guardias de caja de engranaje son SUJETO AL ESGASTE.
- MANTENGASE ALEJADO y MANTENGA manos, pies y cuerpo LEJOS de las cuchillas girando, líneas de conducción, y partes que siguen moviendose depués de que el poder es apagado. ESPERE hasta que todos los elementos móviles se han parado.
- SIEMPRE REEMPLACE CUBIERTAS que han sido quitadas para servicio o mantenimiento.
- DETENGASE, OBSERVE y ESCUCHE por el movimiento de rotación antes de acercarse al implemento.
- NO PISE EN las líneas de conducción o cubiertas.

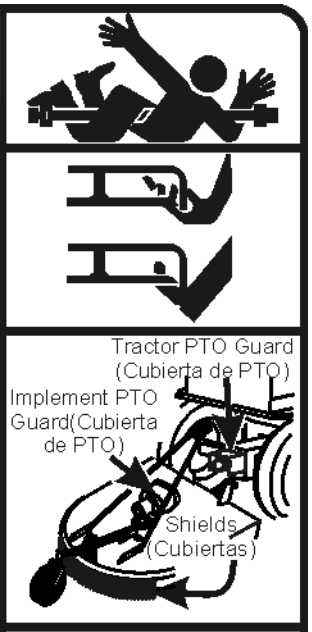

⚠ DANGER

ENTANGLEMENT HAZARD

TO AVOID SERIOUS INJURY OR DEATH:

- DO NOT operate without guards in place and in good condition. PTO and gearbox guarding are SUBJECT TO WEAR.
- STAY AWAY and KEEP hands, feet and body AWAY from rotating blades, drivelines and parts that continue to move after power shut-off. WAIT until all moving elements have stopped.
- ALWAYS REPLACE GUARDS that have been removed for service or maintenance.
- STOP, LOOK and LISTEN for rotating motion before approaching implement.
- DO NOT STEP ON drivelines or guards.

D549 SP 3

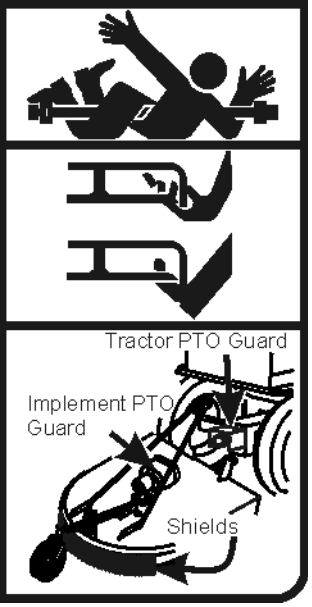

© 2012 Alamo Group Inc.

Descripción de Calcomanía

© 2012 Alamo Group Inc.

SEGURIDAD

NFORMACIÓN DE PARTES

INFORMACIÓN DE PARTES

Las cortadoras BUSH HOG usan balanciadas y componentes de systema seleccionado para los portadores de cuchillas, cuchillas, eje de cortar, navaja, suspensiones de navajas, los rodillos, los componentes de línea motriz, y cojinetes. Estas partes son echas y probadas a la especificaciones de BUSH HOG. Partes que no son auténticas no regularmente llegan con estas especificaciones. El uso de partes que no son auténticas puede reducir el funcionamiento de la cortadora, anular garantias, y presentar un peligro de seguridad. Use partes de cortadora auténticas de BUSH HOG por economía y seguridad. (SPBH-1 SP)

CONTACTE A SU DISTRIBUIDOR BUSH HOG

Manuales de Partes Y Operador

www.algqr.com/bpm

NOTA: *Si necessita un manual completamente en español por favor de ponerse en contacto a;*

Translations, dirección 1502 E. Walnut Street Seguin, TX 78155; Fax: (830) 372-9529

© 2012 Alamo Group Inc.

SEGURIDAD

RIESGOS CON EL MANTENIMIENTO DE IMPLEMENTO

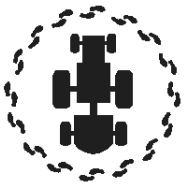	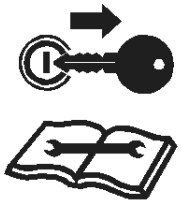	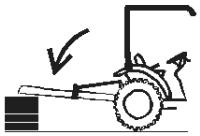	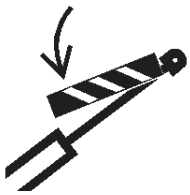	
Inspeccione periódicamente todas las partes móviles, lubrique las líneas de conducción y ajuste todas las sujeciones.	Apague el motor. Quite la llave antes de realizar tareas de mantenimiento.	Bloquee el implemento antes de repararlo. Utilice bloques grandes sobre suelo blando o húmedo	Coloque las trabas de transporte cilíndricas	Inspeccione las cuchillas para detectar daños o fisuras

ADVERTENCIA **MANTENGA LOS IMPLEMENTOS EN BUENAS CONDICIONES DE FUNCIONAMIENTO, A TRAVÉS DE UN SERVICIO, REPARACIÓN O MANTENIMIENTO APROPIADO.**

ANTES DE REALIZAR TAREAS DE SERVICIO, REPARACIÓN Y MANTENIMIENTO DEL IMPLEMENTO:
ASEGURE EL EQUIPO PARA EL SERVICIO
BLOQUE LOS RIESGOS POTENCIALES DE ENERGÍA;piezas giratorias, componentes levantados, presión hidráulica.

- **APAGUE EL MOTOR Y EL PTO**, coloque el freno de mano, descienda el implemento, espere a que se detengan todas las partes móviles y quite la llave antes de bajarse del tractor.
- **COLOQUE** el implemento sobre el suelo o trabe de manera segura los equipos elevados. Utilice bloques grandes sobre suelo blando o húmedo.
- **CIERRE FIRMEMENTE Y TRABE** las alas del implemento levantado.
- **TRABE LA LENGUA DEL IMPLEMENTO** con bloques grandes y el gato de remolque. NO gateé o trabajar debajo del implemento solo sostenido por el gato de remolque.
- **EMPUJE** y **JALE** la palanca del Cilindro Hidráulico Remoto para liberar la presión hidráulica.
- **DESCONECTE** las mangueras hidráulicas de implemento del tractor.
- **DESCONECTE** la línea de conducción del **IMPLEMENTO** del **EJE DE PTO** del tractor.

USE GAFAS DE SEGURIDAD y GUANTES PROTECTORES y siga todos los PROCEDIMIENTOS DE SEGURIDAD al realizar tareas de servicio, reparación y mantenimiento sobre el implemento:

- Siempre **USE GUANTES** protectores al manipular las hojas, cuchillas, bordes filosos o un componente desgastado con bordes filosos.
- Siempre **USE GUANTES** y **GAFAS DE SEGURIDAD** al reparar componentes en caliente
- **EVITE EL CONTACTO** con tanques de aceite hidráulico, bombas, motores, válvulas y superficies de conexión de mangueras calientes.
- **SUJETE FIRMEMENTE** o **TRABE EN POSICIÓN ELEVADA** todos los implementos, bastidores y componentes elevados antes de trabajar sobre los equipos que se encuentran debajo.
- **DETENGA** el movimiento de todos los implementos y **APAGUE EL MOTOR DEL TRACTOR** antes de realizar ninguna tarea.
- **USE** una escalera o gradas elevadas para alcanzar áreas altas del equipo a las que no se pueda acceder desde la tierra.
- **ASEGÚRESE** de estar bien apoyado sobre superficies sólidas planas al subirse al implemento para realizar tareas.
- **SIGA** las instrucciones del fabricante sobre cómo manipular los lubricantes, solventes, limpiadores y otros agentes químicos.
- **NO** cambie ninguna calibración hidráulica de fábrica para evitar fallas de los componentes o equipos.
- **NO** modifique o altere el implemento, las funciones o componentes.
- **NO SUELDE** o repare los componentes de la cortadora. Esto puede causar vibraciones y fallas de los componentes que se desprendan de la cortadora.

REALICE LAS TAREAS DE SERVICIO, REPARACIÓN, LUBRICACIÓN Y MANTENIMIENTO QUE SE DESCRIBEN EN LA SECCIÓN DE MANTENIMIENTO DEL IMPLEMENTO:

- **INSPECCIONE** el implemento para detectar sujeciones sueltas, partes gastadas o rotas, ajustes sueltos o con filtraciones, que los pasadores tengan chavetas y arandelas, y las partes móviles para detectar el desgaste.
- **REEMPLACE** todas las partes gastadas o rotas con repuestos autorizados.
- **LUBRIQUE** la unidad tal como se especifica en el cronograma de lubricación.
- **NUNCA** lubrique, ajuste o quite material mientras el equipo está en funcionamiento o movimiento.
- **AJUSTE** todas las tuercas y pernos tal como se especifica.

INSPECCIÓN DE CUCHILLAS:

- **REEMPLACE** las cuchillas dobladas, dañadas, agrietadas o rotas inmediatamente por cuchillas nuevas.
- **EVITE** fallas de las cuchillas y que vuelen trozos de cuchillas. NO enderece, suelde o suelde con superficies rígidas.

INSPECCIÓN DE PROTECTORES DE SEGURIDAD, GUARDAS Y DISPOSITIVOS DE SEGURIDAD:

- **MANTENGA** en su lugar y en buen estado todos los deflectores, protectores de cadena, protectores de acero, cubiertas de caja de engranajes, cubiertas integrales de PTO, bandas, faldones laterales y zapatas antideslizantes.
- **REEMPLACE** cualquier protector, cubierta o dispositivo de seguridad faltante, roto o gastado.
- El escape del motor, al igual que algunos de sus componentes, y determinados elementos del vehículo contienen o emiten agentes químicos que el estado de California ha determinado que causan cáncer, defectos de nacimiento y otros daños reproductivos.
- Las terminales de baterías y los accesorios relacionados contienen plomo y componentes de plomo, que el estado de California ha determinado son químicos que causan cáncer, defectos de nacimiento u otros daños reproductivos. ***PN HM01 SP***

© 2012 Alamo Group Inc.

SEGURIDAD

			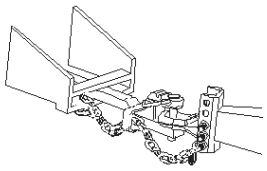	
Use señales de SMV (vehículo de movimiento lento) y balizas	Peligro de detención por pérdida de control	Peligro de velocidad excesiva por pérdida de control	Use la cadena de remolque de seguridad – Tractor a implemento	Coloque las trabas de transporte

ADVERTENCIA **PARA EVITAR LESIONES GRAVES O LA MUERTE AL REMOLCAR O TRANSPORTAR EQUIPOS:**

- **MANTENGA** la velocidad de transporte **POR DEBAJO DE 20** millas por hora para mantener el control del equipo.
- **REDUZCA LA VELOCIDAD** en terreno inclinado, en las curvas y en condiciones de remolque desfavorables.
- **NO REMOLQUE** camiones u otros vehículos
- **USE** un tractor de tamaño adecuado y equipado en función del equipo de remolque.
- **SIGA** todas las reglamentaciones de tránsito locales.

REQUISITOS DEL TRACTOR PARA REMOLCAR O TRANSPORTAR IMPLEMENTOS:

- **SÓLO TRANSPORTE** en el tractor con el mecanismo **ROPS** (antivuelco) en posición elevada.
- **USE** un tractor de tamaño adecuado y equipado, que supere el peso del implemento en al menos un 20%
- **MANTENGA EL 20%** del peso del tractor en las ruedas frontales para mantener la dirección en forma segura.

ANTES DE TRANSPORTAR O REMOLCAR EL IMPLEMENTO:

INSPECCIÓN DEL TRACTOR:

- **VERIFIQUE** la dirección y los frenos para asegurarse el correcto funcionamiento y las condiciones adecuadas.
- **VERIFIQUE LLEVAR EL AVISO DE SMV**, los reflectores y las luces de advertencia para la adecuada operación y visibilidad detrás de la unidad.
- **VERIFIQUE** que no haya impedimentos a la visión mientras conduce, en el tractor, la cabina o el implemento, sentado en el asiento del tractor.
- **AJUSTE** su posición de conducción, los espejos y el transporte del implemento para tener una visión clara para condiciones de conducción y tránsito.

PREPARE EL IMPLEMENTO PARA EL TRANSPORTE O EL REMOLQUE:

COLOQUE LAS TRABAS PARA TRANSPORTE Y LAS CADENAS DE SEGURIDAD:

- **ELEVE LA CORTADORA** e **INSTALE** topes o pasadores de transporte cilíndricos en el eje central
- **ELEVE LAS ALAS** e **INSTALE TRABAS DE TRANSPORTE** o pasadores.
- **AJUSTE LA CADENA DE SEGURIDAD** del implemento al tractor.
- **QUITE** todo material cortado que se acumule en la plataforma de la cortadora.

DETERMINAR LAS CARACTERÍSTICAS DE DETENCIÓN DEL TRACTOR Y EL IMPLEMENTO PARA EL TRANSPORTE O REMOLQUE:

PRUEBAS DE FRENADO:

- **FRENE** a velocidades en aumento.
- Observe las distancias de **DETENCIÓN** con el aumento de velocidad.
- **DETERMINE** la velocidad de transporte máxima segura que no supere las 20 millas por hora.

DETERMINE LA VELOCIDAD DE GIRO MÁXIMA ANTES DE OPERAR EN CARRETERAS O TERRENO IRREGULAR:

- **PONGA A PRUEBA** el equipo aumentando lentamente la velocidad en las curvas para determinar si se puede operar a mayor velocidad.
- **USE MENORES** velocidades de giro en las curvas pronunciadas para evitar el vuelco.

AL REMOLCAR O TRANSPORTAR EL EQUIPO:

- Siempre **USE EL CINTURÓN DE SEGURIDAD** al operar o transportar la cortadora.
- **USE** bajas velocidades para evitar el vuelco con las alas elevadas.
- **USE** bajas velocidades y dirección gradual en las curvas, colinas, o en superficies irregulares o poco uniformes, y en carreteras mojadas.
- **ENCIENDA LAS BALIZAS DE ADVERTENCIA** del tractor.
- **TENGA EN CUENTA** el espacio necesario para el vaivén del implemento en las curvas.

MANTENGA todas las alas elevadas a 3 metros (10 pies) o una mayor distancia de todos los cables de alimentación y obstrucciones elevadas. ***PN TH01 SP***

© 2012 Alamo Group Inc.

SEGURIDAD

RIESGOS DE TRANSPORTE

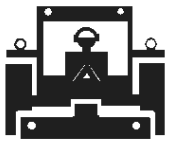			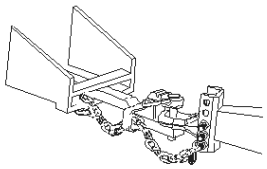	
Use señales de SMV (vehículo de movimiento lento) y balizas	Peligro de detención por pérdida de control	Peligro de velocidad excesiva por pérdida de control	Use la cadena de remolque de seguridad – Tractor a implemento	Coloque las trabas de transporte

ADVERTENCIA **PARA EVITAR LESIONES GRAVES O LA MUERTE AL REMOLCAR O TRANSPORTAR EQUIPOS:**

- **MANTENGA** la velocidad de transporte **POR DEBAJO DE 20** millas por hora para mantener el control del equipo.
- **REDUZCA LA VELOCIDAD** en terreno inclinado, en las curvas y en condiciones de remolque desfavorables.
- **NO REMOLQUE** camiones u otros vehículos
- **USE** un tractor de tamaño adecuado y equipado en función del equipo de remolque.
- **SIGA** todas las reglamentaciones de tránsito locales.

REQUISITOS DEL TRACTOR PARA REMOLCAR O TRANSPORTAR IMPLEMENTOS:

- **SÓLO TRANSPORTE** en el tractor con el mecanismo **ROPS** (antivuelco) en posición elevada.
- **USE** un tractor de tamaño adecuado y equipado, que supere el peso del implemento en al menos un 20%
- **MANTENGA EL 20%** del peso del tractor en las ruedas frontales para mantener la dirección en forma segura.

ANTES DE TRANSPORTAR O REMOLCAR EL IMPLEMENTO:

INSPECCIÓN DEL TRACTOR:

- **VERIFIQUE** la dirección y los frenos para asegurarse el correcto funcionamiento y las condiciones adecuadas.
- **VERIFIQUE LLEVAR EL AVISO DE SMV**, los reflectores y las luces de advertencia para la adecuada operación y visibilidad detrás de la unidad.
- **VERIFIQUE** que no haya impedimentos a la visión mientras conduce, en el tractor, la cabina o el implemento, sentado en el asiento del tractor.
- **AJUSTE** su posición de conducción, los espejos y el transporte del implemento para tener una visión clara para condiciones de conducción y tránsito.

PREPARE EL IMPLEMENTO PARA EL TRANSPORTE O EL REMOLQUE:

COLOQUE LAS TRABAS PARA TRANSPORTE Y LAS CADENAS DE SEGURIDAD:

- **ELEVE LA CORTADORA** e **INSTALE** topes o pasadores de transporte cilíndricos en el eje central
- **ELEVE LAS ALAS** e **INSTALE TRABAS DE TRANSPORTE** o pasadores.
- **AJUSTE LA CADENA DE SEGURIDAD** del implemento al tractor.
- **QUITE** todo material cortado que se acumule en la plataforma de la cortadora.

DETERMINAR LAS CARACTERÍSTICAS DE DETENCIÓN DEL TRACTOR Y EL IMPLEMENTO PARA EL TRANSPORTE O REMOLQUE:

PRUEBAS DE FRENADO:

- **FRENE** a velocidades en aumento.
- Observe las distancias de **DETENCIÓN** con el aumento de velocidad.
- **DETERMINE** la velocidad de transporte máxima segura que no supere las 20 millas por hora.

DETERMINE LA VELOCIDAD DE GIRO MÁXIMA ANTES DE OPERAR EN CARRETERAS O TERRENO IRREGULAR:

- **PONGA A PRUEBA** el equipo aumentando lentamente la velocidad en las curvas para determinar si se puede operar a mayor velocidad.
- **USE MENORES** velocidades de giro en las curvas pronunciadas para evitar el vuelco.

AL REMOLCAR O TRANSPORTAR EL EQUIPO:

- Siempre **USE EL CINTURÓN DE SEGURIDAD** al operar o transportar la cortadora.
- **USE** bajas velocidades para evitar el vuelco con las alas elevadas.
- **USE** bajas velocidades y dirección gradual en las curvas, colinas, o en superficies irregulares o poco uniformes, y en carreteras mojadas.
- **ENCIENDA LAS BALIZAS DE ADVERTENCIA** del tractor.
- **TENGA EN CUENTA** el espacio necesario para el vaivén del implemento en las curvas.

MANTENGA todas las alas elevadas a 3 metros (10 pies) o una mayor distancia de todos los cables de alimentación y obstrucciones elevadas. ***PN TH01 SP***

© 2012 Alamo Group Inc.

RIESGOS ELÉCTRICOS Y DE FUEGO

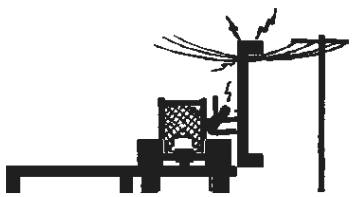		
Contacto de ala con cables eléctricos elevados	Riesgo de choque y explosión Contacto de paletas con líneas de servicios o gas	No opere cerca de fuego. Mantenga limpia la plataforma de la cortadora

⚠ PELIGRO **PARA EVITAR LESIONES GRAVES O LA MUERTE POR CONTACTO ELÉCTRICO AL TRABAJAR CERCA DE CABLES ELÉCTRICOS, LÍNEAS DE GAS Y DE SERVICIOS:**

- **INSPECCIONE** el área de corte para que no interfiera con cables de alimentación eléctricos subterráneos, obstrucciones, líneas de gas, cables y servicios, estructuras municipales o de otro tipo.
- **MANTENGA** todas las alas elevadas a 3 metros (10 pies) o una mayor distancia de todos los cables de alimentación y obstrucciones elevadas.
- **NO** ponga en contacto la cortadora con ninguna estructura u obstrucción de servicios o municipales.
- **LLAME** AL 811 y al 1-800-258-0808 para identificar cables de servicios subterráneos.

PAUTAS DE PREVENCIÓN DE INCENDIOS durante la operación, reparación y servicio de la cortadora y el tractor, a fin de reducir el riesgo de incendio del equipo y de la vegetación:

- El tractor debe estar **EQUIPADO CON MATAFUEGOS**
- **NO OPERE** la cortadora sobre un tractor equipado con escape debajo del bastidor
- **NO FUME** ni acerque fuego directo a la cortadora o el tractor
- **NO CONDUZCA** sobre residuos encendidos o en áreas recientemente quemadas
- **EVITE LA FORMACIÓN DE CHISPAS** al no permitir que la hoja de la cortadora entre en contacto con objetos sólidos como metal o roca.
- **AJUSTE LOS EMBRAGUES DESLIZANTES** para evitar el deslizamiento excesivo y el calentamiento de la placa del embrague.
- **LIMPIE** todo resto de hierba o residuo acumulado alrededor de las líneas de conducción de la cortadora, los embragues deslizantes y cajas de cambios.
- **APAGUE EL MOTOR** al cargar combustible. ***PN EF01 SP***

© 2012 Alamo Group Inc.

SEGURIDAD

RIESGO DEL CONTACTO A LAS CUCHILLAS DE CORTADORA

		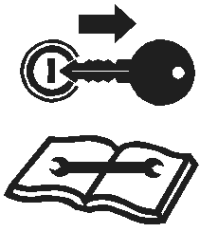
No ponga los dedos debajo de la cortadora	No ponga el pie debajo de la cortadora	Detenga el tractor. Quite la llave. Lea el Manual

⚠ PELIGRO **MANTÉNGASE LEJOS DE LAS CUCHILLAS GIRATORIAS PARA EVITAR LESIONES GRAVES O LA MUERTE POR CONTACTO CON LA CUCHILLA:**

- **MANTÉNGASE LEJOS** y **NO ACERQUE LAS MANOS, LOS PIES** y **EL CUERPO** a las cuchillas giratorias, líneas de conducción y partes hasta que todos los elementos móviles se hayan detenido.
- **NO** ponga las manos o los pies debajo de las plataformas de la cortadora
- **DETENGA** las **CUCHILLAS** giratorias antes de elevar la plataforma de la cortadora o las alas
- **DETENGA** la cortadora, **EXAMÍNELA** Y **PRESTE ATENCIÓN A LOS SONIDOS** antes de acercarse a la cortadora para asegurarse de que se haya detenido todo el movimiento giratorio. ***PN MB01 SP***

RIESGO DE FILTRACION DE ACEITE HIDRÁULICO DE ALTA PRESIÓN

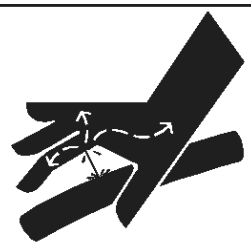		
Penetración de aceite de alta presión en la piel	Erosión de la piel por el aceite de alta presión	Usar cartón para detectar filtraciones de aceite

⚠ PELIGRO **PARA EVITAR LESIONES GRAVES O LA MUERTE POR PENETRACIÓN DE FILTRACIONES DE ACEITE HIDRÁULICO DE ALTA PRESIÓN:**

•**NO OPERE** el equipo con filtraciones de aceite o combustible.

- **MANTENGA** todas las mangueras hidráulicas, líneas y conexiones en **BUEN ESTADO** y **AJUSTADAS** antes de aplicar presión al sistema.
- **LIBERE LA PRESIÓN HIDRÁULICA** antes de desconectar las líneas o trabajar en el sistema.
- **QUITE** y reemplace la manguera si sospecha que tiene filtraciones. Solicite al distribuidor que verifique si hay filtraciones.

LAS FILTRACIONES DE LÍQUIDO DE ALTA PRESIÓN PUEDEN NO SER VISIBLES.

AL VERIFICAR FILTRACIONES HIDRÁULICAS Y TRABAJAR CERCA DE LOS SISTEMAS HIDRÁULICOS:

- **SIEMPRE USE** gafas de seguridad y guantes impenetrables.
- **USE** papel o cartón para verificar si hay filtraciones.
- **NO USE** las manos o partes del cuerpo para detectar filtraciones.
- **MANTENGA** las manos y el cuerpo **LEJOS** de los orificios de clavijas y boquillas de eyección de fluido hidráulico.
- El fluido hidráulico puede causar gangrena si no es extirpado quirúrgicamente de inmediato por un médico especializado en este tipo de lesiones. ***PN HP01 SP***

© 2012 Alamo Group Inc.

SEGURIDAD

RIESGO DE ENREDO POR EL PTO

		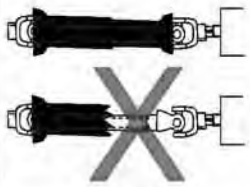	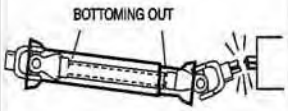
Peligro de enredo No se acerque o toque ningún eje de transmisión de PTO giratorio	Asegúrese de que el eje de PTO esté firmemente sujetado. No use un adaptador de PTO	No opere la máquina si las cubiertas de PTO están dañadas o faltantes	Asegúrese de que los ejes de PTO sean del largo adecuado

⚠ PELIGRO **MANTÉNGASE ALEJADO DE LAS LÍNEAS DE CONDUCCIÓN Y OTROS ELEMENTOS GIRATORIOS PARA EVITAR LESIONES GRAVES O LA MUERTE:**

MANTÉNGASE LEJOS y **NO ACERQUE** las manos, los pies y el cuerpo a las cuchillas giratorias, líneas de conducción y partes hasta que todos los elementos móviles se hayan detenido.

- **DETENGA** la cortadora, **EXAMÍNELA Y PRESTE ATENCIÓN A LOS SONIDOS** antes de acercarse a la cortadora para asegurarse de que se haya detenido todo el movimiento giratorio.
- **LOS ELEMENTOS GIRATORIOS SIGUEN ROTANDO** una vez apagada la **PTO**.

PROTECCIÓN DE LA PTO:

PARA EVITAR LESIONES GRAVES O LA MUERTE POR ENREDO AL OPERAR EL IMPLEMENTO:

- **MANTENGA** instalados los protectores, las cubiertas integrales de las líneas de conducción y las cubiertas de entrada
- **NO OPERE** la cortadora si los protectores o cubiertas no están bien colocados o faltan.
- **REEMPLACE O REPÁRELOS** si faltan, están dañados o rotos
- **SIEMPRE REEMPLACE LOS PROTECTORES** que se han quitado para tareas de reparación o mantenimiento.

PARA EVITAR que la línea de conducción se rompa durante las operaciones:

- **VERIFIQUE** que la línea de conducción tenga el largo adecuado entre el eje de **PTO** y el eje de la caja de cambios del implemento.
- Las líneas de conducción demasiado cortas se pueden soltar o romper.
- Las líneas de conducción demasiado largas pueden tocar el suelo.
  Un ensamblaje telescópico de la línea de conducción que toque el suelo no se deslizará y se solidificará.
- Si la línea de conducción toca el suelo, puede atravesar los cojinetes de soporte y romper el eje de **PTO**.
- **EVITE** hacer curvas pronunciadas o elevar la cortadora a alturas que puedan hacer caer la línea de conducción.
- Lubrique los componentes telescópicos del eje de transmisión en forma semanal.

COMUNÍQUESE CON EL DISTRIBUIDOR si la línea de conducción del implemento no coincide con el eje de **PTO** del tractor:

- **NO UTILICE UN ADAPTADOR DE PTO.**
  El uso de un adaptador de **PTO** puede causar vibración excesiva, caída de objetos, fallas de las cuchillas y el implemento como consecuencia de la duplicación de la velocidad operativa. El aumento de la longitud de trabajo puede exponer áreas desprotegidas de la línea de conducción. ***PN PE01 SP***

© 2012 Alamo Group Inc.

SEGURIDAD

RIESGO DE ATROPELLO

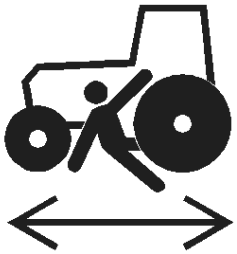	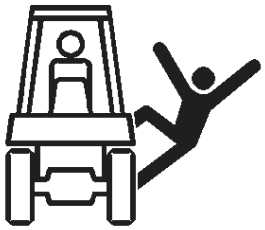	
Riesgo de atropello del operador	Riesgo de atropello por caída del operador	Riesgo de atropello por caída del operador

⚠ PELIGRO **PARA EVITAR LESIONES GRAVES O LA MUERTE POR CAÍDA DEL TRACTOR O ATROPELLO DEL EQUIPO:**

- USE tractores equipados con SISTEMA ANTIVUELCO (ROPS) y CINTURONES DE SEGURIDAD para las operaciones de corte.
- MANTENGA EL SISTEMA ROPS trabado en posición vertical.
- SÓLO ENCIENDA el tractor sentado en el asiento del tractor.
- SIEMPRE ABRÓCHESE el cinturón de seguridad al operar el tractor y los equipos.
- SÓLO OPERE el tractor y el equipo sentado en el asiento del tractor.
- NUNCA LLEVE A OTRAS PERSONAS en el tractor o implemento.

AL SUBIR Y BAJAR DEL TRACTOR:

- • SÓLO suba o baje del tractor cuando éste y sus partes móviles estén detenidos.
- • APAGUE EL MOTOR Y LA TDF, coloque el freno de mano, descienda del implemento, espere a que se detengan todas las partes móviles y quite la llave antes de bajarse del tractor. ***PN RO01 SP***

© 2012 Alamo Group Inc.

RIESGO DE OBJECTOS LANZADOS Continuado

	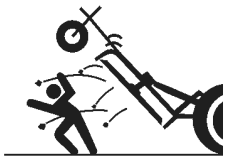			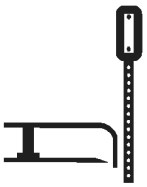
Peligro de objetos lanzados por la cortadora	Objetos lanzados desde cortadora elevada	Objetos lanzados desde cortadora elevada	Inspeccione el área. Quite los objetos extraños	No permita que las cuchillas entren en contacto con objetos sólidos

OPERACIÓN DE LA CORTADORA:

- **NO** exceda la capacidad de corte nominal de la cortadora, ni corte elementos que no sean vegetación.
- **USE CABINAS DE TRACTOR CERRADAS** cuando haya dos o más cortadoras operando en un mismo sector.
- No opere la cortadora en áreas susceptibles al ataque de abejas o insectos, salvo que **USE PRENDAS PROTECTORAS** o una cabina de tractor cerrada.
- **AJUSTE** las secciones de la cortadora o la ala cercana y paralela al suelo sin exponer las cuchillas
- **AJUSTE LA ALTURA** de corte para **EVITAR EL CONTACTO DE LAS CUCHILLAS** con objetos sólidos, como alambres, piedras, postes, cordones, guardarrailes y obstrucciones fijas.
- **NO** opere la cortadora con la(s) ala(s) elevada(s) o en posición de transporte.
- **DETENGA LA CORTADORA** de inmediato si las cuchillas entran en contacto con objetos pesados, estructuras fijas, guardarrailes de metal y estructuras de cemento:
    1. **LAS CUCHILLAS PUEDEN FALLAR** con el impacto y los objetos pueden ser arrojados a gran velocidad.
    2. **INSPECCIONE** y **REEMPLACE** las cuchillas dañadas.
    3. **VERIFIQUE** el equilibrio del porta cuchillas y **REEMPLÁCELO** si está dañado.
- **NO** opere la cortadora en agua **PARA EVITAR** una posible **FALLA DE LAS CUCHILLAS**.
- **EVITE OPERAR LA CORTADORA** en reversa:
    1. **DETENGA EL PTO** y retroceda la cortadora.
    2. **DESCIENDA** la cortadora, encienda el **PTO** y corte hacia adelante.
- **DETENGA EL PTO** y las **CUCHILLAS** al elevar las alas o la cortadora a posición de transporte.
- **NO ENCIENDA EL PTO** con la cortadora en posición de transporte.
- **DETENGA** la cortadora cuando se produzca **VIBRACIÓN EXCESIVA:**
    1. **DETENGA EL PTO Y EL MOTOR** del tractor.
    2. **INSPECCIONE** la cortadora para detectar la fuente de la vibración
    3. **REEMPLACE** toda parte dañada o las **CUCHILLAS** dobladas o dañadas. ***PN TO01-X SP***

© 2012 Alamo Group Inc.

SEGURIDAD

RIESGO DE OBJECTOS LANZADOS

	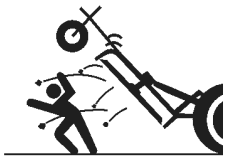			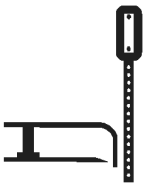
Peligro de objetos lanzados por la cortadora	Objetos lanzados desde cortadora elevada	Objetos lanzados desde cortadora elevada	Inspeccione el área. Quite los objetos extraños	No permita que las cuchillas entren en contacto con objetos sólidos

⚠ PELIGRO **LAS CORTADORAS GIRATORIAS PUEDEN ARROJAR OBJETOS A 90 METROS (300 PIES) O MÁS EN CONDICIONES ADVERSAS.**

PARA EVITAR LESIONES GRAVES O LA MUERTE AL OPERADOR O TRANSEÚNTES COMO CONSECUENCIA DE OBJETOS ARROJADOS:

- **MANTENGA** a los transeúntes a 100 metros de distancia (300 pies)

NO OPERE LA CORTADORA SI HAY PERSONAS A MENOS DE 100 METROS(300 PIES), SALVO QUE:

- Todos los **PROTECTORES CONTRA OBJETOS ARROJADOS** estén colocados y en buen funcionamiento al operar la cortadora, entre los que se incluyen los deflectores frontales y traseros, los protectores de cadena, los protectores de acero, las bandas, los faldones laterales y las zapatas antideslizantes.
- Las partes de la cortadora o la ala estén ajustadas cerca y paralelas al suelo, sin exponer las cuchillas.
- Se ha inspeccionado el **ÁREA DE CORTE** y se han quitado todos los materiales extraños y residuos.
- **LOS TRANSEÚNTES** estén en el interior de un vehículo cerrado.

ANTES DE OPERAR LA CORTADORA, INSPECCIONE EL ÁREA PARA DETECTAR LA POSIBILIDAD DE OBJETOSQUE PUEDAN SER LANZADOS:

- **QUITE** residuos, piedras, cables, alambres, objetos metálicos y cualquier otro objetos extraños del área.
  Los alambres, cables, sogas, cadenas y objetos metálicos pueden ser arrojados o salir desprendidos de la plataforma a gran velocidad:
  1. **MARQUE** los objetos que no se puedan quitar.
  2. **EVITE** estos objetos cuando use la cortadora.

INSPECCIÓN DEL ÁREA PARA DETECTAR HIERBA ALTA Y MALEZAS:

- **INSPECCIONE Y QUITE** cualquier residuo oculto de gran tamaño.
- **PASE LA CORTADORA** a una altura intermedia
- **INSPECCIONE** y quite el residuo restante
- **PASE LA CORTADORA** a la altura final

PROTECCIÓN CONTRA OBJETOS ARROJADOS DE LA CORTADORA:

- **MANTENGA** todos los protectores contra objetos arrojados en su lugar y en buen funcionamiento al operar la cortadora, entre los que se incluyen los deflectores frontales y traseros, los protectores de cadena, los protectores de acero, las bandas, los faldones laterales y las zapatas antideslizantes.
- **NO OPERE LA CORTADORA** si falta algún protector contra objetos arrojados, o si éstos están dañados.

DERECHO DE PASO (autopista) CON LA CORTADORA

- **UTILICE PROTECTORES DE CADENA DOBLES** para autopistas, derecho de paso, parques o cortes en cinturón verde donde pueda haber viviendas, vehículos o ganado dentro de los 100 metros (300 pies) de la cortadora.
- Ninguna protección ofrece una eficacia del 100% en la prevención de objetos arrojados. Para reducir la posibilidad de que se produzcan lesiones:
  1. **MANTENGA LOS PROTECTORES DE LA CORTADORA**, los faldones laterales, la zapatas antideslizantes y las cuchillas en buen estado de funcionamiento,
  2. **ELEVE LA ALTURA DE CORTE a 15 CM (6 PULGADAS)** como mínimo,
  3. **INSPECCIONE EL ÁREA** con cuidado antes de pasar la cortadora para ELIMINAR el pos ble riesgo de **OBJETOS ARROJADOS,**
  4. **NUNCA PERMITA QUE LAS CUCHILLAS EN MOVIMIENTO ENTREN EN CONTACTO CON OBJETOS SÓLIDOS** como alambres, piedras, postes, cordones, guardarrailes o el suelo. ***PN TO01 SP***

© 2012 Alamo Group Inc.

SEGURIDAD

SEGURIDAD DE CONECTAR O DESCONECTAR IMPLEMENTO

⚠ PELIGRO **PARA EVITAR LESIONES GRAVES O LA MUERTE POR APLASTAMIENTO POR EL TRACTOR O IMPLEMENTO:**

- **AL DAR MARCHA ATRÁS** el tractor hacia el enganche del implemento:
- **NO PERMITA QUE HAYA PERSONAS** entre el tractor y el implemento

ANTES de conectar y desconectar el enganche del implemento:

- **APAGUE EL MOTOR DEL TRACTOR**, coloque la palanca en “estacionar", ponga el freno de mano y saque la llave.

Al conectar y desconectar el enganche del implemento:

- **NO** se agache o camine debajo de la cortadora o la ala en posición elevada.
- **USE** el **GATO** con lengüeta para elevar lengüetas de implementos pesados a fin de controlar el movimiento de la lengüeta del implemento.
- **EVITE** recargar el gato para evitar una falla de éste y una lesión al operador.

AL CONECTAR LA LÍNEA DE CONDUCCIÓN DEL IMPLEMENTO:

PARA EVITAR que la línea de conducción del implemento se suelte durante la operación:

- **LUBRIQUE** el anillo de cierre del resorte del yugo para asegurarse de que se deslice l bremente sobre el eje de **PTO**
- **ASEGURE** las bolas de cierre del yugo en la muesca del eje de **PTO.**
- **PRESIONE y JALE DE LA LÍNEA DE CONDUCCIÓN del EJE DE TOMA DE FUERZA(PTO)** del tractor y del implemento para asegurarse de que estén **FIRMEMENTE SUJETADOS**

PARA EVITAR que la línea de conducción se rompa durante las operaciones:

- **VERIFIQUE** que la línea de conducción tenga el largo adecuado entre el eje de **PTO** y el eje de la caja de cambios del implemento.
- Las líneas de conducción demasiado cortas se pueden soltar o romper.
- Las líneas de conducción demasiado largas pueden tocar el suelo.
- Un ensamblaje telescópico de la línea de conducción que toque el suelo no se deslizará y se solidificará.
- Si la línea de conducción toca el suelo, puede atravesar los cojinetes de soporte y romper el eje de **PTO**.

COMUNÍQUESE CON EL DISTRIBUIDOR si la línea de conducción del implemento no coincide con el eje de TDF del tractor:

- **NO UTILICE UN ADAPTADOR DE PTO**.
- El uso de un adaptador de **PTO** puede ocasionar:
- Vibración excesiva, caída de objetos, fallas de la hoja y el implemento como consecuencia de la duplicación de la velocidad operativa.
- Mayor extensión de trabajo, lo que deja expuestas áreas desprotegidas de la línea de conducción e implica el riesgo de enredo con otros objetos.

ANTES DE QUITAR LAS TRABAS DE RETENCIÓN DE LAS ALAS:

- **CONECTE** las mangueras al tractor
- **LLENE** los cilindros de las alas con lubricante
- **MANTENGA** a los transeúntes lejos del área antes de operar las alas
- **DESCIENDA LAS ALAS** de manera lenta y cuidadosa.

NO conecte la cortadora a un tractor con la TDF directamente conectada a la transmisión del tractor. ***PN CD01 SP***

© 2012 Alamo Group Inc.

SEGURIDAD

RIESGO DE APLASTAMIENTO

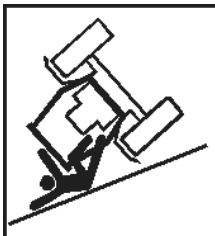			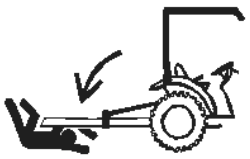	
Lesión aplastante por vuelco	Trabe el sistema ROPS (antivuelco) en la posición vertical	Siempre utilice cinturón de seguridad	Lesión aplastante por caída de implemento	Lesión aplastante por caída de ala

⚠ PELIGRO **PARA EVITAR UNA LESIÓN GRAVE O LA MUERTE POR CAÍDA DEL TRACTOR, O EL APLASTAMIENTO, VUELCO Y APLASTAMIENTO DE UN EQUIPO POR LA CAÍDA DE UNA ALA O UN IMPLEMENTO:**

- **USE** tractores equipados con **SISTEMA ANTIVUELCO (ROPS) y CINTURONES DE SEGURIDAD** para las operaciones de corte.
- **MANTENGA EL SISTEMA ROPS** trabado en posición vertical.
- **SIEMPRE ABRÓCHESE** el cinturón de seguridad al operar el tractor y los equipos.
- **SÓLO OPERE** el tractor y el equipo sentado en el asiento del tractor.

AL ELEVAR O DESCENDER LAS ALAS:

- Eleve o descienda las alas **SÓLO CUANDO ESTÉ SENTADO** en el asiento del tractor, con el cinturón de seguridad ajustado.
- Eleve o descienda las alas **SÓLO** cuando la lengüeta del implemento esté firmemente ajustada a la barra de tracción del tractor **PARA EVITAR** el vuelco del implemento.
- **MANTENGA A LOS TRANSEÚNTES FUERA** del área de operación **PARA EVITAR** accidentes por aplastamiento.
- **MANTENGA** suficiente espacio libre alrededor de los implementos y alas **PARA EVITAR** el contacto con edificios o cables elevados.

Los equipos ELEVADOS se pueden caer por fallas mecánicas o hidráulicas o por un movimiento inesperado de la palanca de control.

⚠ ADVERTENCIA **PARA EVITAR LA CAÍDA DEL EQUIPO al trabajar cerca o debajo de las alas, los componentes e implementos elevados por un enganche de tractor de 3 puntos:**

- **SUJETE CON FIRMEZA o bloquee en posición vertical todos los equipos, alas y componentes elevados.**
- **BLOQUEE EN POSICIÓN VERTICAL y sujete con firmeza el equipo antes de poner las manos, los pies o el cuerpo debajo de los equipos o componentes elevados.**
- **MANTENGA A LOS TRANSEÚNTES LEJOS de las alas dobladas hasta que estén bloqueadas o trabadas en posición vertical.**

AL ESTACIONAR el implemento y el tractor:

- **DESCIENDA** el implemento, **TRABE** o **BLOQUEE** las partes elevadas antes de alejarse del equipo.
- **NUNCA** deje un implemento sin atención en posición elevada.

⚠ ADVERTENCIA **PARA EVITAR LA CAÍDA O EL APLASTAMIENTO DE NIÑOS POR EL EQUIPO:**

- **NUNCA DEJE** que los niños jueguen sobre el tractor o los implementos, ni en sus alrededores.

AL DESENGANCHAR EL IMPLEMENTO:

- **DESCIENDA** el implemento, **TRABE** o **BLOQUEE** las partes elevadas antes de alejarse del equipo.
- **USE** el gato de la lengüeta para controlar el movimiento de la lengüeta del implemento
- **USE** el **GATO** de le lengüeta para elevar lengüetas de implementos pesados.
- **EVITE** recargar el gato para evitar falla al gato y una lesión al operador.

ANTES DE QUITAR LAS TRABAS DE RETENCIÓN DE LAS ALAS:

- **CONECTE** las mangueras al tractor
- **LLENE** los cilindros de las alas con lubricante
- **MANTENGA** a los transeúntes lejos del área de funcionamiento de las alas
- **DESCIENDA LAS ALAS** de manera lenta y cuidadosa. ***PN CH01 SP***

© 2012 Alamo Group Inc.

SEGURIDAD

SEGURIDAD DEL OPERADOR

Lea con atención el Manual del Operador	Siempre use gafas de seguridad	Use casco y calzado protector	Nunca consuma drogas o alcohol mientras opera el equipo	Utilice chaleco de seguridad al operar en o cercas de carreteras

ADVERTENCIA **PARA EVITAR LESIONES GRAVES O LA MUERTE, SIGA LAS SIGUIENTES INSTRUCCIONES:**

- **LEA, COMPRENDA** y **SIGA** las instrucciones del Manual del Operador, al igual que las Advertencias y Mensajes de Seguridad.
- **USE GAFAS DE SEGURIDAD**, calzado protector, casco, protección auditiva y guantes al operar o reparar el equipo
- **USE** un aparato de respiración apropiado al operar en condiciones polvorientas a fin de evitar contraer enfermedades respiratorias.
- **NO USE** prendas sueltas o joyas que se puedan enredar con las partes giratorias y causar una lesión.
- **NO CONSUMA DROGAS** o **ALCOHOL** antes o durante la operación del equipo.
- **NO PERMITA** que nadie opere el equipo bajo los efectos negativos de las drogas o el alcohol.
- **CONSULTE** a un médico para conocer los efectos desfavorables de la medicación sobre los sentidos.
- **MANTÉNGASE ALERTA**, la operación prolongada puede causar fatiga. **HAGA UNA PAUSA** y **DESCANSE**.

SEGURIDAD DE OPERACIÓN GENERAL

CONDICIONES DE VISIBILIDAD AL USAR LA CORTADORA:

- **OPERE LA CORTADORA CON LUZ SOLAR** o con luz que aporte una visibilidad nítida de más de 90 metros (100 yardas).
- **DEBE PODER VISUALIZAR** e identificar transeúntes, terrenos empinados, pozos, desniveles, obstrucciones elevadas, cables de alimentación, residuos y objetos extraños.

VELOCIDAD RESPECTO AL SUELO AL USAR LA CORTADORA:

- El rango de **VELOCIDAD NORMAL** es de entre 2 y 5 millas por hora.
- **AJUSTE LA VELOCIDAD DE CORTE** según las condiciones del terreno y el tipo de césped, la densidad y la altura del corte.
- **REDUZCA LA VELOCIDAD DE CORTE** al acercarse a inclinaciones empinadas, pozos, desniveles, obstrucciones elevadas, cables de alimentación y para evitar residuos y objetos extraños.

INFESTACIÓN CON INSECTOS

- No opere en áreas susceptibles al ataque de abejas o insectos, salvo que **USE PRENDAS PROTECTORAS** o una cabina de tractor cerrada.

VELOCIDAD DE PTO:

- **NO EXCEDA LA VELOCIDAD DE PTO NOMINAL DEL IMPLEMENTO**
- **EVITE** superar las velocidades nominales de PTO, porque puede causar roturas en la línea de conducción o fallas de las cuchillas.

SEÑALES DE SEGURIDAD:

- **REEMPLACE** cualquier señal de seguridad faltante, dañada o ilegible. ***PN OS01 SP***

© 2012 Alamo Group Inc.

SEGURIDAD

INSTRUCCIONES DE SEGURIDAD Y PRÁCTICAS GENERALES

El mejor operador es un operador cuidadoso. La seguridad es de importancia fundamental para el fabricante, y también debería serlo para el propietario u operador. La mayoría de los accidentes se pueden evitar prestando suma atención al equipo, al ambiente circundante, y tomando algunas precauciones. La primera sección de este manual incluye una lista de Mensajes de Seguridad que deben observarse para contribuir a la protección del operador y otras personas frente a lesiones o la muerte. Lea con atención estos Mensajes de Seguridad antes de ensamblar, operar o reparar este Implemento. Este equipo sólo debe ser operado por personas que hayan leído el manual, responsables y calificadas, que sepan cómo hacerlo de manera responsable.

El Símbolo de Alerta de Seguridad se utiliza en combinación con una Señal Verbal, tal como la que se muestra a continuación, en todo este manual y en los autoadhesivos adheridos a los equipos. El Símbolo de Alerta de Seguridad significa:

"¡ATENCIÓN! ¡MANTÉNGASE ALERTA! ¡SU SEGURIDAD ESTÁ EN JUEGO!" El Símbolo y la Señal Verbal tienen el objetivo de advertir al propietario/operador sobre un riesgo inminente y el grado de lesión que se puede producir al operar este equipo.

Adopte todas las medidas habituales para trabajar en forma segura y, sobre todo, recuerde que la seguridad depende de USTED. Sólo USTED puede impedir una lesión grave o la muerte a causa de prácticas no seguras.

⚠ PELIGRO Indica una situación peligrosa inminente que, de no ser evitada, **OCASIONARÁ** la **MUERTE O UNA LESIÓN MUY GRAVE**.

⚠ ADVERTENCIA Indica una situación peligrosa inminente que, de no ser evitada, **PODRÍA OCASIONAR** la **MUERTE O UNA LESIÓN MUY GRAVE**.

⚠ PRECAUCIÓN Indica una situación peligrosa inminente que, de no ser evitada, **PODRÍA OCASIONAR UNA LESIÓN MENOR**.

Importante Identifica instrucciones o procedimientos específicos que, de no observarse estrictamente, podrían ocasionar daños o la destrucción de la maquinaria, los accesorios o el entorno.

NOTA: *Identifica aspectos de particular interés para lograr una operación o reparación más eficiente y conveniente.*

LEA CON ATENCIÓN Y RESPETE los siguientes Mensajes de Seguridad. Si no se siguen cuidadosamente las advertencias e instrucciones indicadas en este Manual y en los Mensajes de Seguridad del implemento, se pueden producir lesiones graves o la muerte. Siempre siga las instrucciones de este manual y use el sentido común para evitar situaciones peligrosas.

NOTA: *Si desea obtener una traducción de esta sección de seguridad en alguno de los siguientes idiomas, comuníquese con: Translations, a la dirección 1502 E. Walnut Street Seguin, TX 78155; Fax: (830) 372-9529; La Sección de Seguridad está disponible en español, portugués, francés, alemán, ruso.* ***PN GS01 SP***

© 2012 Alamo Group Inc.

SECCIÓN DE SEGURIDAD

© 2012 Alamo Group Inc.

Instrucciones de operaciones antes de la entrega del DISTRIBUIDOR al CLIENTE

El distribuidor deberá informar al comprador de este producto las condiciones, disposiciones y procedimientos de garantía aplicables; informar la responsabilidad del comprador de capacitar a sus operadores para la operación segura; revisar el contenido del Manual del Operador, incluido el equipo de seguridad, la operación segura y el mantenimiento; y revisar las Señales de Seguridad que se encuentran en el implemento (y en el tractor, de ser posible).

- IMPLEMENTOS: He explicado que los deflectores, protectores de cadena o faldones sólidos se deben mantener en buenas condiciones de reparación y se deben instalar, excepto en zonas donde personas, vehículos, ganado u otros bienes no corran peligro por objetos arrojados, y en los casos en que dichos equipos de seguridad impedirían un desempeño razonable de la cortadora en su tarea asignada.

- LÍNEAS DE CONDUCCIÓN: Me he asegurado de que todos los protectores de líneas de conducción, de caja de engranajes y otros están en buenas condiciones de reparación y firmemente sujetados para prevenir lesiones por enredo u objetos arrojados.

- MÁQUINAS HIDRÁULICAS: He explicado la necesidad de usar aceite hidráulico limpio, cambiar los filtros según las instrucciones, detener filtraciones, prevenir daños por operar con aceite demasiado caliente, cuidar las mangueras, usar mangueras del tipo correcto, mantener la presión operativa especificada y prevenir el posible riesgo de que el aceite penetre en la piel.

- IMPLEMENTOS PLEGABLES: He explicado que no es posible proteger contra objetos arrojados cuando el cabezal está elevado del suelo y que el operador es responsable de verificar que no existan personas en las inmediaciones. He explicado que el brazo o cabezal de cortadora elevado puede entrar en contacto con obstrucciones elevados y dañar cables y líneas telefónicas, y posiblemente causar lesiones. He explicado que el brazo o cabezal extendido, o el brazo retraído, puede entrar en contacto con cables de alimentación y causar lesiones o la muerte por electrocución, y que el operador es responsable de evitar dichos riesgos.

SERVICIO ANTES DE LA ENTREGA
VERIFIQUE Y AJUSTE O LUBRIQUE SEGÚN SEA NECESARIO

Consulte los detalles en el Manual del Operador

Inspección realizada – Garantía y procedimientos de seguridad explicados – Instalación realizada

LUBRICACIÓN E HIDRÁULICA

- ☐ Caja de engranajes (niveles de aceite)
- ☐ Nivel de aceite hidráulico (tanque externo)
- ☐ Nivel de aceite hidráulico del tractor
- ☐ Mangueras hidráulicas (no retorcidas y ajustadas)
- ☐ Propulsor de bomba frontal (conjunto ajustado y eje bien alineado)

CORTADORA

- ☐ Pernos de husillo y motor bien ajustados
- ☐ Nivel de aceite del husillo
- ☐ Pernos de porta cuchillas bien ajustados/pasadores de retención colocados
- ☐ Nivel y altura de corte de la cortadora ajustados
- ☐ Cojinetes del eje de corte lubricados
- ☐ Todas las piezas metálicas bien ajustadas
- ☐ Presión de aire y neumáticos/tuercas de rueda (bien ajustadas)
- ☐ Cojinetes de rueda (verificar, engrasar y hacer carga previa)

ACCESORIOS E INSTALACIÓN

- ☐ Deflectores frontales y traseros
- ☐ Accesorios de trituración
- ☐ Sentido de giro de las hojas correcto
- ☐ Vigas y brazos de eje
- ☐ Lengüeta y barras de control (instaladas y ajustadas)
- ☐ Todos los pernos, pasadores y tuercas (ajuste correcto)

CONEXIONES DE CORTADORA A TRACTOR

- ☐ Longitud de barra de enganche (verificar y fijar)
- ☐ Pivote y conexiones de bastidor en A
- ☐ Barras de control (ajustadas iguales)
- ☐ Altura de eje (ajustar)
- ☐ Altura de corte (ajustar)
- ☐ Verificación de pre-operación de kit de montaje
- ☐ Aleta de cortadora (ajustar nivel con el centro)
- ☐ Aleta de cortadora (verificar operación de elevación correcta)
- ☐ Líneas de conducción C.V. (verificar radio de giro máx.)
- ☐ Enganche de tracción (ajuste de altura)
- ☐ Piezas metálicas de montaje bien ajustadas

ELEMENTOS DE SEGURIDAD

- ☐ Protectores (operación e instalación)
- ☐ Embrague de línea de conducción (limitador de ajuste) (ajustar y poner en marcha)
- ☐ Autoadhesivos de seguridad (colocados)
- ☐ Manual del Operador (entregado)
- ☐ Protector de TDF del tractor (instalado)
- ☐ Emblema S.M.V. (instalado de ser necesario)
- ☐ Gato con lengüeta (instalación y operación)
- ☐ Cadena de remolque de seguridad (instalada)
- ☐ Manual de Seguridad de Línea de Conducción ADMA (entregado)
- ☐ Manual de Seguridad de Cortadora AEM (entregado en porta manual)
- ☐ Se mostró el Video de Seguridad de Cortadora AEM al comprador

Bush Hog está dispuesto a suministrar un (1) Video de Prácticas de Seguridad para Cortadoras AEM

Por favor enviar: ☐ Video de Seguridad para el Operador de Cortadoras AEM/FEMA – formato VHS

☐ Video de Seguridad para el Operador de Cortadoras AEM/FEMA – formato DVD

☐ Manual del Operador de la Cortadora

☐ Manual de Seguridad del Operador de la Cortadora AEM

Nombre del solicitante_____Teléfono:_____

Dirección del solicitante_____

Ciudad_____

Estado_____

Código postal_____

Modelo de cortadora_____Número de serie_____

Fecha de compra_____ Vendedor del distribuidor_____

Nombre del distribuidor_____Dirección del distribuidor_____

Enviar por correo a:

AEM Video Services

1502 E. Walnut Street

Seguin, TX 78155

O enviar por fax a:

(830) 372-9529

O enviar por correo electrónico a:

AEMVideo@alamo-group.com

A fin de reducir la tasa de accidentes y mejorar la operación segura de las cortadoras, *Bush Hog* se ha asociado con otros fabricantes de la industria para desarrollar el video y la guía de Prácticas de Seguridad para Cortadoras Industriales y Agrícolas AEM/FEMA.

El video explica a los operadores de tractores y cortadoras las prácticas seguras que deben adoptar cuando utilizan cortadoras industriales y agrícolas. Es importante que todos los operadores de cortadoras aprendan cómo operar sus equipos de corte y puedan reconocer los posibles peligros que pueden surgir al operar una cortadora. Este video, en conjunto con el manual del operador de la cortadora y los mensajes de advertencia que se encuentran en la cortadora, serán muy útiles para complementar este aprendizaje tan importante.

Es posible que su distribuidor autorizado de Bush Hog le haya mostrado este video y le haya entregado una copia en DVD cuando adquirió su cortadora. Si usted o algún operador de cortadora no vio el video: mire el video, lea este Manual del Operador, y complete la Guía del Video antes de operar su cortadora nueva. Si no comprende alguna de las instrucciones del video o del manual del operador, o si tiene alguna pregunta acerca de la operación segura, comuníquese con su supervisor, con el distribuidor o con *Bush Hog*.

Si desea recibir una copia del video en VHS, envíe un mensaje de correo electrónico a AEMVideo@alamo-group.com o un fax al (830) 372-9529, o envíe por correo una copia rellenada del formulario que se encuentra al dorso de esta página a AEM VHS Video 1502 E Walnut Street, Seguin, TX 78155, y solicite la versión en VHS. Indique su nombre, dirección postal, modelo de cortadora y número de serie.

Cada uno de los operadores debe recibir capacitación para cada equipo (tractor y cortadora), comprender el uso previsto, y comprender los posibles peligros antes de operar el equipo.

La informacion y material mecionado en la informacion anterior junto con el Manual de Operador puede asistir en cumplir con los requisitos de OSHA para el entrenamiento anual del Operador.

REQUISITOS DE ENTRENAMIENTO DEL OSHA

Los seguientes requisitos de entrenamiento se an tomoda del Titulo 29, código de la pieza de regulaciones federales 1928.57 (a) (6). www.osha.gov

Instrucciones del operador. A la hora de la asignación inicial y por lo menos anualmente después de eso, el empleador mandará a cada empleado quien opera un tractor agricola o implemento en las practicas de operación segura y el mantenimiento de el equipo con el cual el empleado esté, o estará implicado y de cualquier otras prácticas dictados por el ambiente laboral.

Al propietario/operador/distribuidor

Este Manual del Operador es una parte esencial de la operación segura de esta máquina y se debe mantener con la unidad siempre. El implemento incluye un porta manual donde se puede guardar el manual de manera adecuada. Si el manual se extravía o se daña, puede solicitar otra copia sin cargo a un distribuidor autorizado de Bush Hog o descargarlo del sitio web de Bush Hog (www.bushhog.com).

ANTES DE COMENZAR LEA, COMPRENDA y SIGA la información incluida en este manual, el Manual de Seguridad de la Cortadora AEM y el manual del operador del tractor para conocer cómo operar la máquina y realizar tareas de servicio correctamente. De lo contrario, podría sufrir lesiones u ocasionar lesiones a terceros. Todos los implementos con partes móviles son potencialmente peligrosos. Cada esfuerzo ha sido hecho paraasegurar que la màquina esté segura, pero los operadores deben evitar entrar en prácticas peligrosas y seguir lasinstrucciones escritas que son proporcionadas. El fabricante ha diseñado este implemento para ser usado con todos sus equipos de seguridad correctamente sujetados para minimizar la probabilidad de accidentes.

LA SEGURIDAD PRIMERO. Lea con atención la totalidad de la sección de seguridad de este manual antes de operar el equipo. No permita que nadie opere el equipo sin haber leído y comprendido la totalidad de este manual. Comuníquese con el distribuidor si necesita explicación sobre alguna instrucción que no haya comprendido del todo.

Los cuidados que brinde a su Implemento Bush Hog determinarán en gran medida su satisfacción con el desempeño y la vida útil del equipo. Lea con atención y siga las instrucciones de este manual para comprender cabalmente su nuevo implemento, su uso previsto, y sus requisitos de servicio.

Todas las referencias que se hacen en este manual a derecha, izquierda, frontal, trasero, arriba y abajo corresponden a la perspectiva en el sentido del desplazamiento hacia delante con el implemento correctamente sujetado al tractor.

La información sobre repuestos se encuentra por separado en el Manual de Partes. Las cortadoras Bush Hog utilizan componentes del sistema equilibrados y coincidentes para porta cuchillas, cuchillas, ejes de corte, hojas, ganchos para hojas, rodillos, componentes de los engranajes, y cojinetes. Estas partes se fabrican y se prueban según las especificaciones de Bush Hog. Las partes compatibles no genuinas no siempre cumplen con estas especificaciones. El uso de partes no genuinas puede perjudicar el desempeño de la cortadora, anular la garantía y presentar un riesgo para la seguridad. Use partes genuinas Bush Hog para ahorrar dinero y maximizar la seguridad.

Para referencia futura, registre el número de modelo y el número de serie de BUSH HOG que ha adquirido.

Distribuidor		Teléfono		Fecha de compra:	
Dueño		Fecha de compra:		Número de Serie	

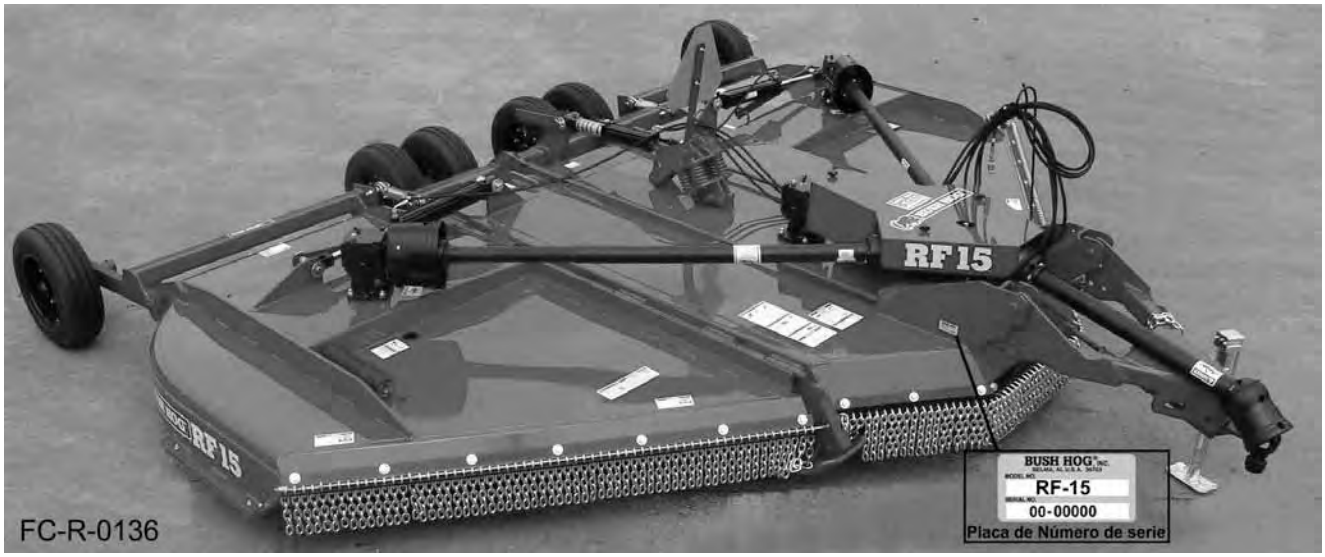

RF-15

BUSH HOG®

CORTADORA/TRITURADORA GIRATORIA DE ELEVACIÓN DEL NIVEL MECÁNICAS CON ALETA FLEXIBLE

Publicado en 09/13

Parte nº. 50071181

MANUAL DE OPERADOR

Este Manual del Operador es una parte esencial de la operación segura de esta máquina y se debe mantener con la unidad siempre. LEA, ENTIENDA, y SIGA las Instrucciones de Seguridad y Operación contenidas en este manual antes de operar el equipo. ***C01-Cover SP_B***

Importantes instrucciones de operación y las instrucciones de seguridad se encuentran en el video Cortacésped Sobre Seguridad que se puede acceder instantáneamente en el internet en:

www.algqr.com/bvs

Vídeo de Seguridad

www.algqr.com/bvs

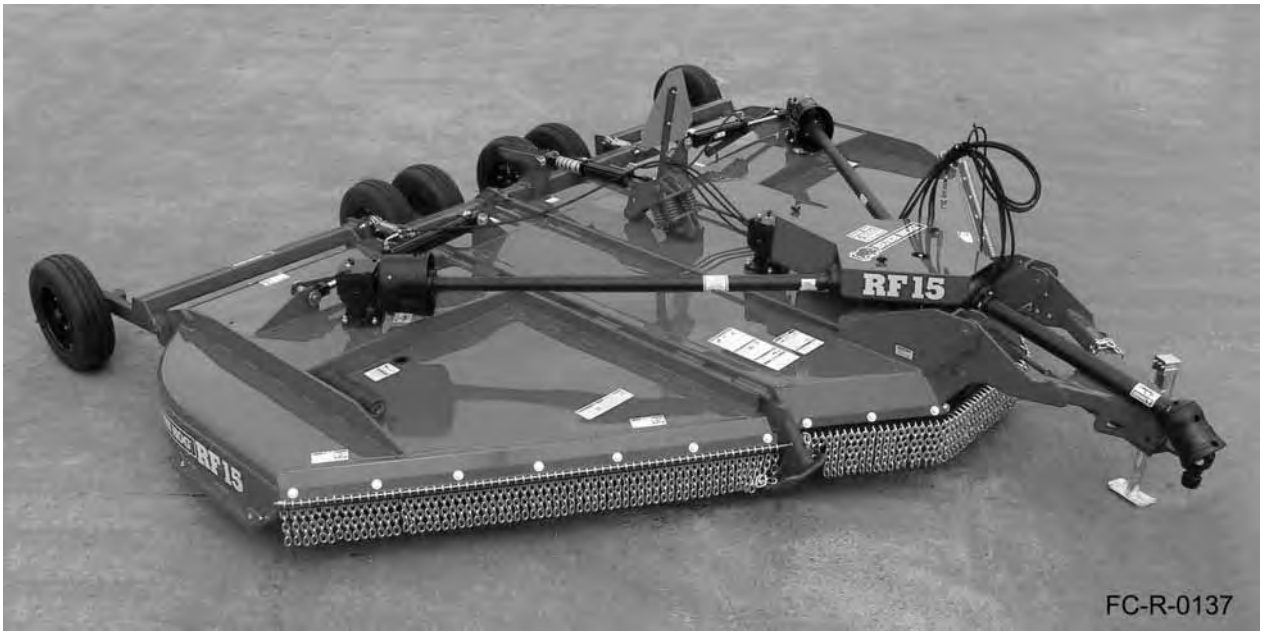

BUSH HOG®

2501 Griffin Ave.
Selma, AL 36703
334-874-2700
Correo electronico: www.bush-hog.com

Página Web de Bush Hog

www.algqr.com/bwe

ATTENTION!
Read Manual

If you do not read spanish please flip manual over for safety information in english.

MEMBER OF THE ALAMO GROUP
ALWAYS ON THE CUTTING EDGE®

©2012 Alamo Group Inc.

$0.00