2215R1, 2215RR1 - 540 RPM
12215R1, 12215RR1 - 1000RPM

BUSH HOG®

FLEX WING ROTARY CUTTER

Revised 01/20

PARTS MANUAL
SECTION 113

An Operator's Manual was shipped with the equipment. The Operator's Manual is an integral part of the safe operation of this machine and must be maintained with the unit at all times. **READ, UNDERSTAND, and FOLLOW** the Safety and Operation Instructions contained in this manual before operating the equipment. If the Operator's Manual is not with the equipment, contact your dealer or Bush Hog to obtain a copy before operating the equipment.

Safety Video

Important Operating and Safety Instructions are found in the Mower Safety Video that can be instantly accessed on the internet at: www.algqr.com/bve

www.algqr.com/bve

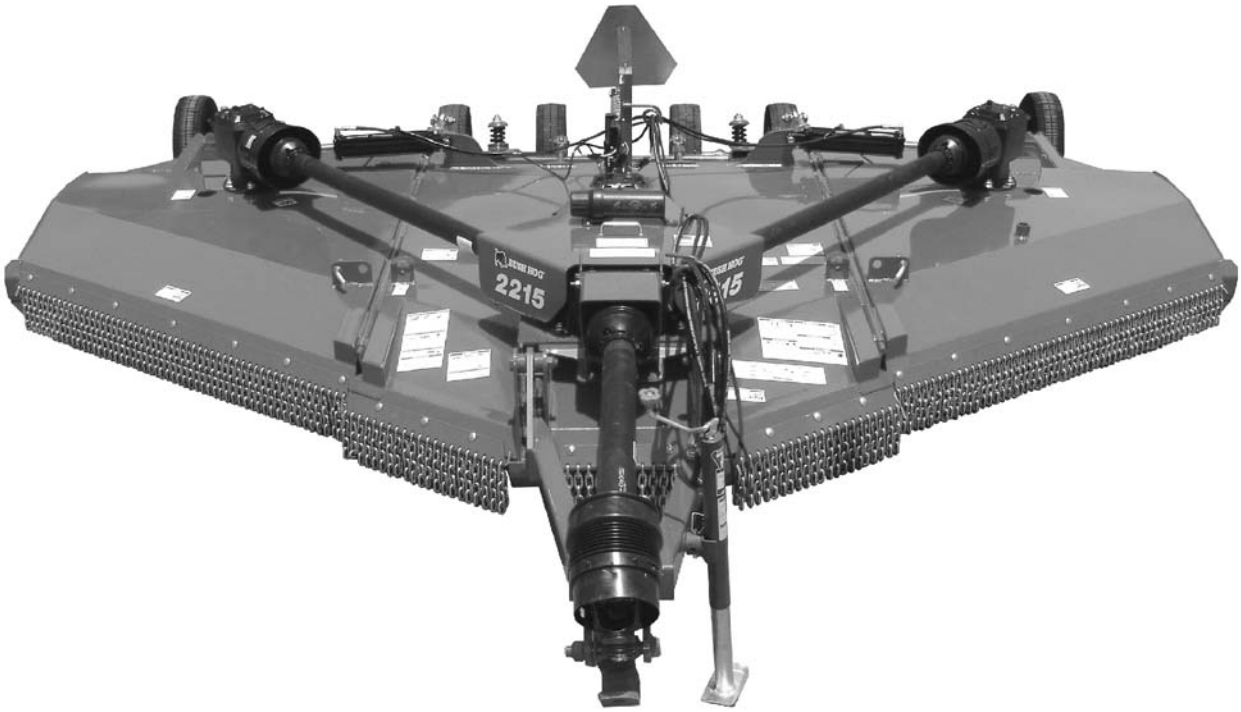

BUSH HOG®
2501 Griffin Ave.
Selma, AL 36703
Parts Ordering 1-800-304-2836
www.bushhog.com

ATTENCIÓN! LEA EL INSTRUCTIVO

Si No Lee Ingles, Pida Ayuda a Alguien Que Si Lo Lea Para Que le Traduzca las Medidas de Sequridad.

MEMBER OF THE ALAMO GROUP
ALWAYS ON THE CUTTING EDGE®

© 2016 Alamo Group Inc.

PARTS ORDERING GUIDE

The following instructions are offered to help eliminate needless delay and error in processing purchase orders for the equipment in this section.

1. The Parts Section is prepared in logical sequence and grouping of parts that belong to the basic machine featured in this manual. Part Numbers and Descriptions are given to help locate the parts and quantities required.

2. The Purchase Order must include the name and address of the person or organization ordering the parts, who should be charged, and if possible, the serial number of the machine for which the parts are ordered.

3. The Purchase Order must clearly list the quantity of each part, the complete and correct part number (be sure to include all periods), and the basic name of the part.

4. The Manufacturer reserves the right to substitute parts where applicable.

5. Some parts are unlisted items which are special production items not normally stocked and are subject to special handling. Request a quotation for such parts before sending a Purchase Order.

6. The Manufacturer reserves the right to change prices without prior notice.

For maximum safety and to guarantee optimum product reliability, always use genuine BUSH HOG Parts. The use of inferior replacement parts may cause premature or catastrophic failure which could result in serious injury or death.Direct any questions regarding parts to:

BUSH HOG
2501 Griffin Ave.
Selma, AL 36703
www.bushhog.com
Contact Us
800-304-2836

BUSH HOG®

To the Owner/Operator/Dealer

All implements with moving parts are potentially hazardous. There is no substitute for a cautious, safe-minded operator who recognizes the potential hazards and follows reasonable safety practices. The manufacturer has designed this implement to be used with all its safety equipment properly attached to minimize the chance of accidents.

BEFORE YOU START! Read the safety messages on the implement and shown in your manual. Observe the rules of safety and common sense!

WARRANTY INFORMATION:
Read and understand the complete Warranty Statement found in this Manual. Fill out the Warranty RegistrationForm in full and return it to within 30 Days. Make certain the Serial Number of the Machine is recorded on theWarranty Card and on the Warranty Form that you retain.

LIMITED WARRANTY

Bush Hog warrants to the original purchaser of any new Bush Hog equipment, purchased from an authorized Bush Hog dealer, that the equipment be free from defects in material and workmanship for a period of one (1) year for non-commercial, state and municipalities' use and ninety (90) days for commercial use from date of retail sale. The obligation of Bush Hog to the purchaser under this warranty is limited to the repair or replacement of defective parts.

Replacement or repair parts installed in the equipment covered by this limited warranty are warranted for ninety (90) days from the date of purchase of such part or to the expiration of the applicable new equipment warranty period, whichever occurs later. Warranted parts shall be provided at no cost to the user at an authorized Bush Hog dealer during regular working hours. Bush Hog reserves the right to inspect any equipment or parts which are claimed to have been defective in material or workmanship.

DISCLAIMER OF IMPLIED WARRANTIES & CONSEQUENTIAL DAMAGES

Bush Hog's obligation under this limited warranty, to the extent allowed by law, is in lieu of all warranties, implied or expressed, **INCLUDING IMPLIED WARRANTIES OF MERCHANTABILITY AND FITNESS FOR A PARTICULAR PURPOSE** and any liability for incidental and consequential damages with respect to the sale or use of the items warranted. Such incidental and consequential damages shall include but not be limited to: transportation charges other than normal freight charges; cost of installation other than cost approved by Bush Hog; duty; taxes; charges for normal service or adjustment; loss of crops or any other loss of income; rental of substitute equipment, expenses due to loss, damage, detention or delay in the delivery of equipment or parts resulting from acts beyond the control of Bush Hog.

THIS LIMITED WARRANTY SHALL NOT APPLY:

1. To vendor items which carry their own warranties, such as engines, tires, and tubes.
2. If the unit has been subjected to misapplication, abuse, misuse, negligence, fire or other accident.
3. If parts not made or supplied by Bush Hog have been used in connection with the unit, if, in the sole judgement of Bush Hog such use affects its performance, stability or reliability.
4. If the unit has been altered or repaired outside of an authorized Bush Hog dealership in a manner which, in the sole judgement of Bush Hog, affects its performance, stability or reliability.
5. To normal maintenance service and normal replacement items such as gearbox lubricant, hydraulic fluid, worn blades, or to normal deterioration of such things as belts and exterior finish due to use or exposure.
6. To expendable or wear items such as teeth, chains, sprockets, belts, springs and any other items that in the company's sole judgement is a wear item.

NO EMPLOYEE OR REPRESENTATIVE OF BUSH HOG IS AUTHORIZED TO CHANGE THIS LIMITED WARRANTY IN ANY WAY OR GRANT ANY OTHER WARRANTY UNLESS SUCH CHANGE IS MADE IN WRITING AND SIGNED BY BUSH HOG'S SERVICE MANAGER, 2501 GRIFFIN AVE., SELMA, ALABAMA 36703.

Record the model number, serial number and date purchased. This information will be helpful to your dealer if parts or service are required.

MODEL NUMBER _____

SERIAL NUMBER _____

DATE OF RETAIL SALE _____

MAKE CERTAIN THE WARRANTY
HAS BEEN FILED WITH BUSH HOG
SELMA, ALABAMA

2215R1, 2215RR1 - 540 RPM
12215R1, 12215RR1 - 1000RPM
ALPHABETICAL INDEX

CONTENTS **PAGE**

Axle, Center Deck 113-6-1
Axles, Wing Decks 113-6-2
Axles & Related Parts, Single & Dual 113-4-4
Arms & Related Parts, Tandem 113-6-5
Baffle Kit 113-7-1
Blades & Blade Holders ....See Deck Assemblies
Chain, Safety Tow 113-5-1
Chains, Discharge Safety - Single Chain 113-2-2
Chains, Discharge Safety - Double Row 113-2-4
Cylinders, Hydraulic 113-8-2
Decal Kits - Safety 113-1-1
Deck Assembly, Center 113-1-2, 113-1-3
Deck Assembly, RH & LH Wing 113-1-4, 113-1-5
Driveline Holder Assembly 113-5-2
Driveline Holder - CV Diveshaft EZ Mount 113-5-3
Driveshaft, Wing - Comer / EG 113-4-1
Driveshaft, Center Coupler - Comer / EG 113-4-2
Driveshaft, Input CV 540 RPM - Comer / EG 113-4-3
Driveshaft, Input CV 1000 RPM 1-3/8” 21 Spline- Comer / EG 113-4-4
Driveshaft, Input CV 1000 RPM 1-3/4” 20 Spline- Comer / EG 113-4-5
Gearbox, Transfer (540 RPM Input) (Mfg. by Comer) 113-3-1
Gearbox, Transfer (1000 RPM Input) (Mfg. by Comer) 113-3-2
Gearbox, Center and L.H. Wing 540 RPM 2215 113-3-4
Gearbox, R.H. Wing 540 RPM - 2215 113-3-6
Gearbox, Center 1000 RPM - 12215 113-3-5
Gearbox, L. H. Wing 1000 RPM - 12215 113-3-3
Gearbox, R.H. Wing 1000 RPM - 12215 113-3-7
Hitch Assembly, Swivel Pivot Clevis 113-5-2
Hydraulic Fittings To Tractor Remotes 113-8-1
Jackstand 113-5-1
LED Light Kit (Rear Lights Only) 113-2-1
Leveling Rod Assembly 113-5-1
Shield, Wing Driveshafts 113-2-7
Shield Assembly, Center 113-2-6
SMV Sign & Related Parts 113-1-6
Tire, Airplane ....113-6-6 &113-6-7
Tire, Solid 113-6-6
Tongue Assembly 113-5-1
Turnbuckle Assembly, Axle Adjust 113-6-3

© 2016 Alamo Group Inc.

DECAL KIT
2215R1,2215RR1 (540 RPM Models)
12215R1, 12215RR1 (1000 RPM Models)

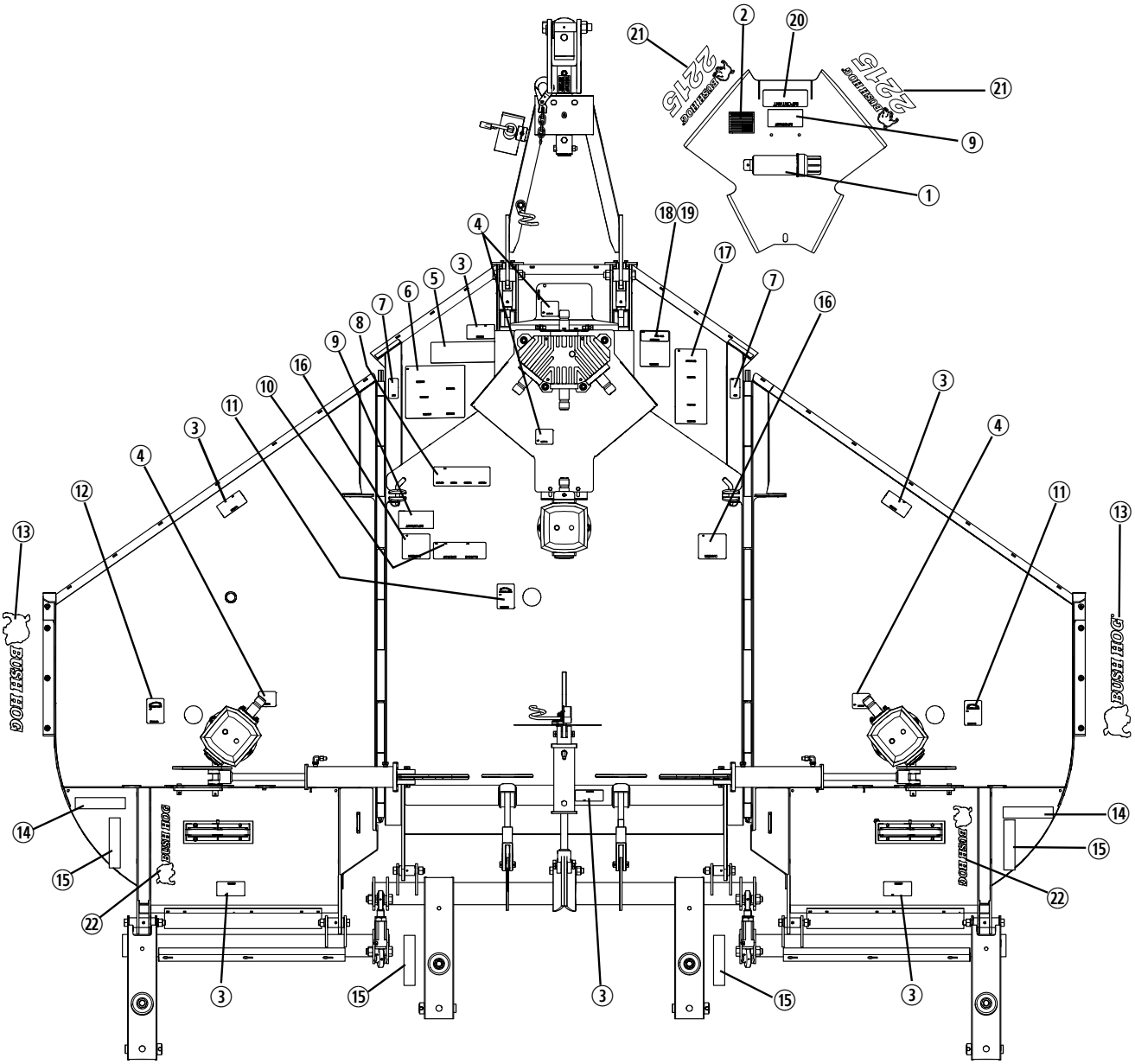

REF. NO.	PART NO.	DESCRIPTION	QTY.	REF. NO.	PART NO.	DESCRIPTION	QTY.
1	50035289	Tube, Manual Storage	1	12	D552	Decal, Blade Rotation CW	1
2	50074259	Decal, Made in USA	1	13	50061049	Decal, Bush Hog Logo	2
	50076960	**Decal Kit**	**1**	14	50031214	Reflector, Red 2 x 9	2
3	D614	Decal, Danger (Thrown Objects)	6	15	50031212	Reflector, Amber 2 x 9	6
4	D546	Decal, Danger	4	16	D565	Decal, Danger	2
5	D587	Decal, Lubricant	1	17	D553	Decal, Warning	1
6	D549	Decal, Operation	1	18	D547	Decal, Danger / Warning (540 RPM)	1
7	D555	Decal, Danger	2	19	D548	Decal, Warning Over Lay (1000 RPM)	1
8	D813	Decal, Danger (Multilingual)	1	20	87340	Important Decal	1
9	91443	Decal, Important	2	21	50076893	Model Decal, 2215	2
10	D559	Decal, Genuine Bush Hog Parts	1		50076894	Model Decal, 12215	2
11	D551	Decal, Blade Rotation CCW	2	22	50065309	Decal, Bush Hog Logo	2

© 2016 Alamo Group Inc.

CENTER DECK ASSEMBLY
2215R1,2215RR1 (540 RPM Models)
12215R1, 12215RR1 (1000 RPM Models)

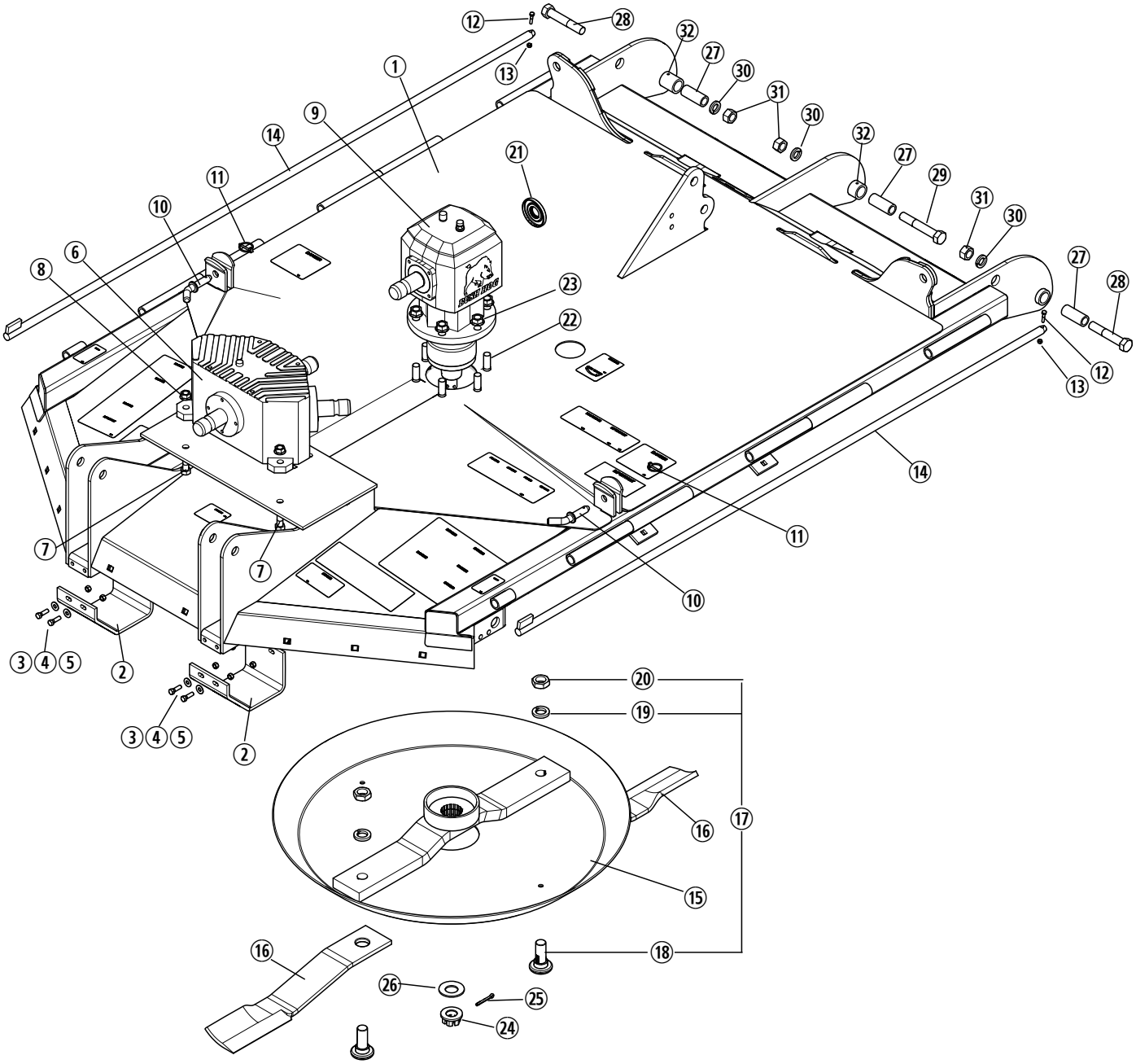

© 2016 Alamo Group Inc.

CENTER DECK ASSEMBLY
2215R1,2215RR1 (540 RPM Models)
12215R1, 12215RR1 (1000 RPM Models)

REF. NO.	PART NO.	DESCRIPTION	QTY.
1	50076826	Center Deck w/Decals	1
	50076829	Center Deck w/Rings & Decals	1
2	50052696	Skid	2
3	1161212	Capscrew, 3/8” x 1-1/4” Gr. 5	8
4	15915BH	Flatwasher, 3/8”	8
5	9131200	Locknut, 3/8”	8
6	71202	Transfer Gearbox (540 RPM)	1
	50072724	Transfer Gearbox (1000 RPM)	1
7	20206	Capscrew, 5/8” x 2” Gr. 5	4
8	20214	Locknut, 5/8” Flanged	4
9	00790703BH	Gearbox Assy, (1000 RPM)	1
	00790748BH	Gearbox Assy, (540 RPM)	1
10	50076342	Pin, Wing Latch	2
11	69391	Lynch Pin	2
12	11914BH	Capscrew, 1/4” x 1-1/4” Gr. 5	2
13	15608	Locknut, 1/4”	2
14	92316	Hinge Rod Weldment	2
15	50076881	Weldment, Pan	1
16	50076631	Blade, Parallel Uplift CCW, 22.25”	2
17	63607	Blade Bolt Kit	2
18	7919BH	Blade Bolt	2
19	20322	Lockwasher, 1-1/8”	2
20	252BH	Jamb Nut, 1-1/8”	2
21	50074092	Sight Window, Gearbox 85MM	1
22	44510BH	Capscrew, 3/4” x 2-1/2” Gr. 8	6
23	20299	Locknut, 3/4” Gr G Flng	6
24	70418	Castle Nut, M36-10.0	1
25	00786155BH	Cotter Pin, M6 x 65	1
26	00785157BH	Spring Washer 36mm	1
27	50073257	Bushing	3
28	1162850	Capscrew 7/8 x 5” Gr.5	2
29	20272BH	Capscrew 7/8” x 5.5” Gr.5	1
30	15824	Lockwasher, 7/8”	3
31	19503	Hex Nut, 7/8”	3
32	449BH	Grease Fitting	3

© 2016 Alamo Group Inc.

WING DECK ASSEMBLIES
2215R1,2215RR1 (540 RPM Models)
12215R1, 12215RR1 (1000 RPM Models)

This Parts Illustration applies to RH and LH Wings.

RH WING SHOWN

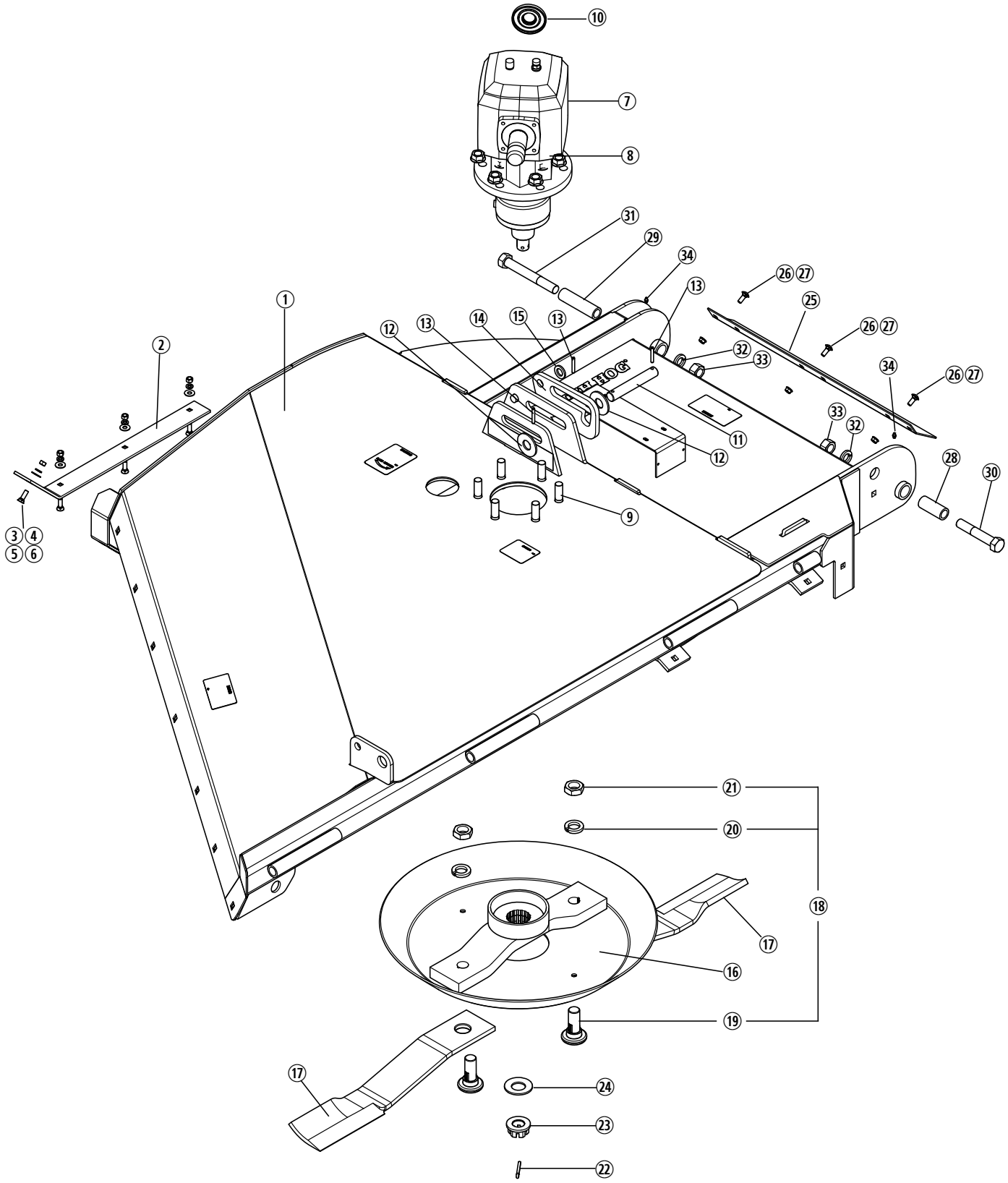

© 2016 Alamo Group Inc.

RH & LH WING DECK ASSEMBLIES
2215R1,2215RR1 (540 RPM Models)
12215R1, 12215RR1 (1000 RPM Models)

This Parts Listing applies to RH and LH Wings.

REF. NO.	PART NO.	DESCRIPTION	QTY.
1	50076827	R.H. Wing Frame w/Decals	1
	50076830	R.H. Wing Frame w/Rings & Decals	1
	50076828	L.H. Wing Frame w/Decals	1
	50076831	L.H. Wing Frame w/Rings & Decals	1
2	50072721	Skid R.H.	1
	50072800	Skid L.H.	1
3	3161212	Plow Bolt, 3/8” x 1-1/4”	4
4	15915BH	Flatwasher, 3/8”	7
5	15812	Lockwasher, 3/8”	7
6	8151200	Hex Nut, 3/8”	7
7	00790749BH	Gearbox Assy, R.H., (540 RPM)	1
	00790748BH	Gearbox Assy, L.H., (540 RPM)	1
	00790753BH	Gearbox Assy, R.H., (1000 RPM)	1
	00790752BH	Gearbox Assy, L.H., (1000 RPM)	1
8	20299	Locknut, 3/4” Flanged	6
9	44510BH	Capscrew, 3/4” x 2-1/2” Gr. 8	6
10	50074092	Sight Window, Gearbox	1
11	93378	Cylinder Pin	1
12	15908BH	Flatwasher, 1”	2
13	20325	Roll Pin, 1/4” x 1-3/4”	3
14	50073310	Latch	1
15	15921	Flatwasher, 3/4”	1
16	50076879	Pan, Blade	1
17	50076631	Blade, Uplift CCW R.H. Wing	2
	50076632	Blade, Uplift CW L.H. Wing	2
18	63607	Blade Bolt Kit	2
19	7919BH	Blade Bolt	2
20	20322	Lockwasher, 1-1/8”	2
21	252BH	Jamb Nut, 1-1/8”	2
22	00786155BH	Cotter Pin M6 x 65	1
23	70418	Castle Nut, M36-3.0 (Blade Pan)	1
24	00786157BH	Spring Washer 36mm	1
25	50076967	Guard, Wing Discharge	1
26	44109BH	Carriage Bolt 3/8” x 1” Gr.5	3
27	15583	Locknut 3/8” Flanged	3
28	50073257	Bushing, Axle Pivot	1
29	50076832	Bushing, Axle Pivot	1
30	1162850	Capscrew 7/8” x 5” Gr.5	1
31	20750	Capscrew 7/8” x 6-3/4” Gr.5	1
32	15824	Lockwasher 7/8”	2
33	19503	Hex Nut 7/8”	2
34	449BH	Grease Fitting	2

© 2016 Alamo Group Inc.

SMV SIGN & RELATED PARTS
2215R1,2215RR1 (540 RPM Models)
12215R1, 12215RR1 (1000 RPM Models)

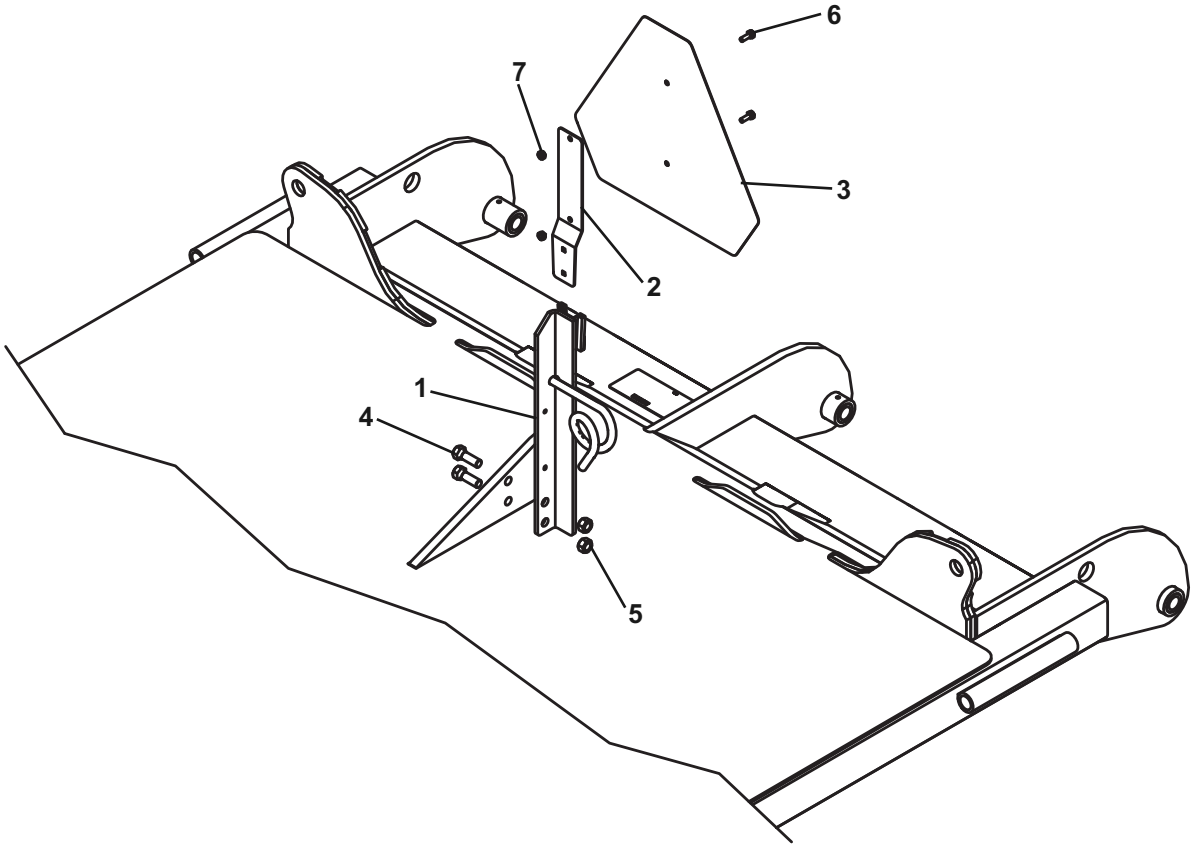

REF. NO.	PART NO.	DESCRIPTION	QTY.
1	50073455	SMV Mount Angle Weldment	1
2	2438621	SMV Spade Bracket	1
3	94359	SMV Sign	1
4	15093	Capscrew, 1/2” x 1-1/2” Gr. 5	2
5	15554	Locknut, 1/2”	2
6	1160806	Capscrew, 1/4” x 3/4” Gr. 5	2
7	15608	Locknut, 1/4” Gr C	2

© 2016 Alamo Group Inc.

LED LIGHT KIT (REAR LIGHTS ONLY)
2215R1,2215RR1 (540 RPM Models)
12215R1, 12215RR1 (1000 RPM Models)

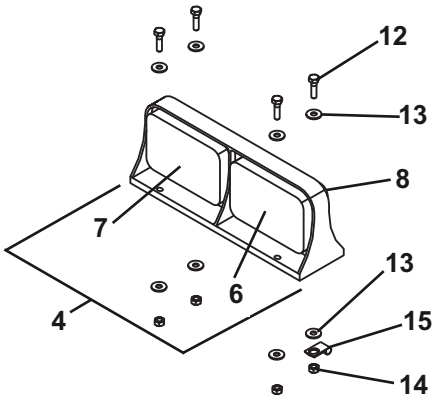

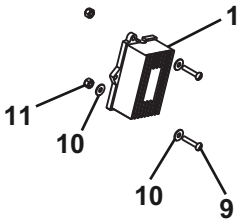

LEFT SIDE

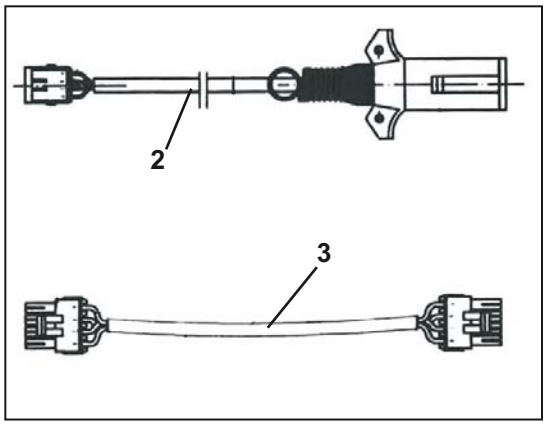

WIRING HARNESSES

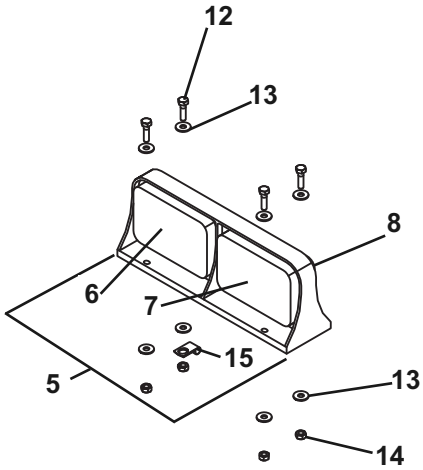

RIGHT SIDE

REF. NO.	PART NO.	DESCRIPTION	QTY.
	50074720	**Light Kit**	**1**
1	50072057	Module, Enhance	1
2	50074721	Main Harness (7 Pin, 16’ Long)	1
3	50074725	Wishbone Harness (8’ Long)	2
4	50074723	Dual LED Ag Lamp, Left Side, Amber/Red	1
5	50074724	Dual LED Ag Lamp, Right Side, Red/Amber	1
6	50072062	Lens, Red Replacement	2
7	50072063	Lens, Amber Replacement	2
8	50072064	Cover, Black Replacement Lens	4
9	-------	Slt Pn Hd Mach Screw, #10 x 1”	2
10	17020600	Flatwasher, #10	3
11	44520BH	Locknut, #10	2
12	44186BH	Capscrew, 1/4” x 1” Gr. 5	8
13	15918BH	Flatwasher, 1/4”	16
14	15608	Locknut, 1/4” Gr. C	8
15	50074735	Clamp	6

© 2016 Alamo Group Inc.

FRONT AND REAR
SINGLE ROW HIGHWAY CHAINS
2215R1,2215RR1 (540 RPM Models)
12215R1, 12215RR1 (1000 RPM Models)

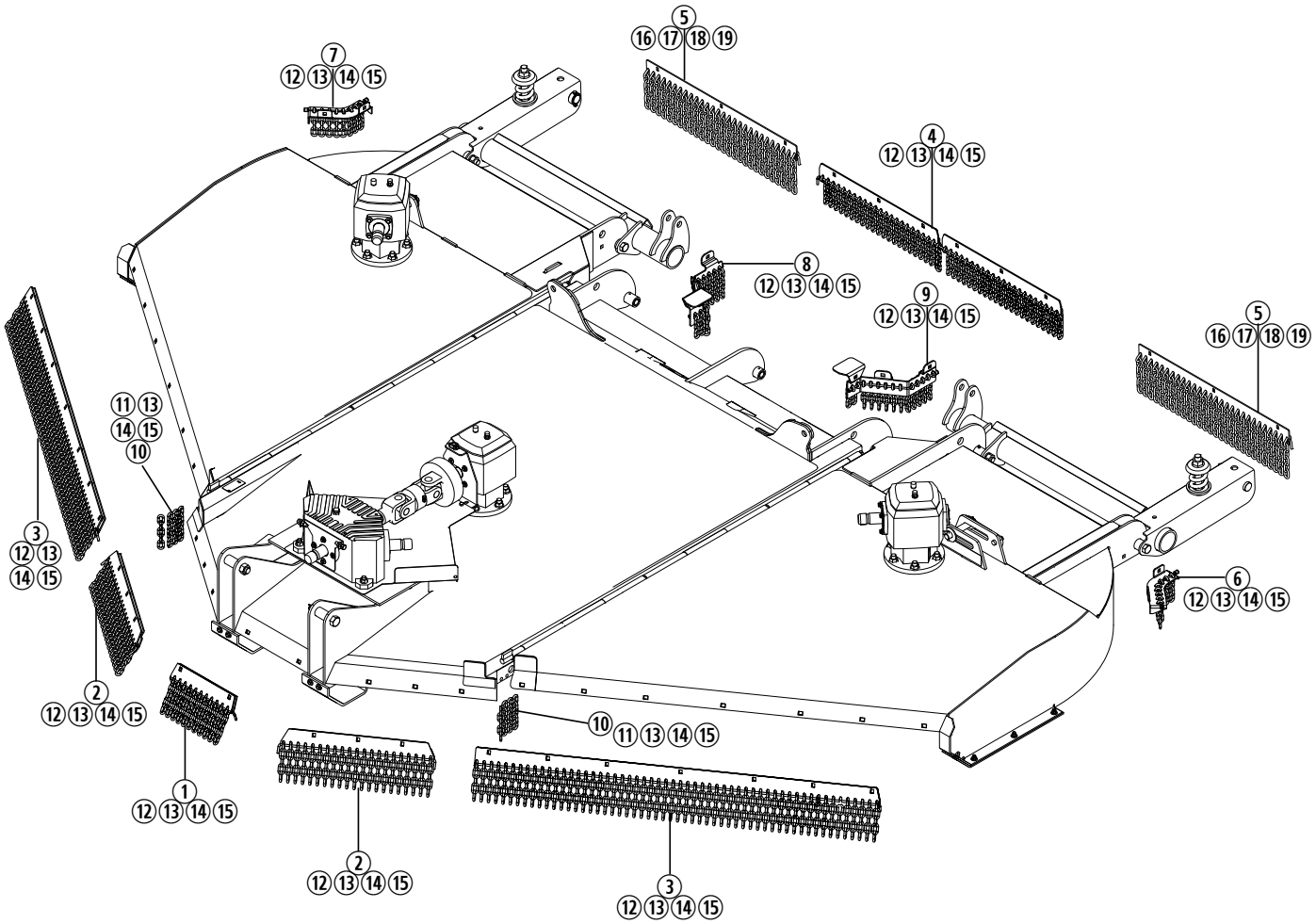

© 2016 Alamo Group Inc.

FRONT AND REAR SINGLE ROW HIGHWAY CHAINS 2215R1,2215RR1 (540 RPM Models) 12215R1, 12215RR1 (1000 RPM Models)

REF. NO.	PART NO.	DESCRIPTION	QTY.
1	**50072730**	**Chain Assy, Center Front**	**1**
	50072731	Support, Front Center Chain	1
	50072733	Rod, Chain	1
	50017264	Chain, Plated - 5 Link	11
2	**50071748**	**Chain Assy, Center Front Side**	**2**
	50071742	Support, Front Outside Chain	1
	50071831	Rod, Chain	1
	50017264	Chain, Plated - 5 Link	21
3	**50071746**	**Chain Assy, Front Wing Chain**	**2**
	50071622	Support, Front	1
	50069719	Rod, Chain	1
	50017264	Chain, Plated - 5 Link	56
4	**50072727**	**Chain Assy, Center Rear**	**1**
	50072728	Support, Rear Chain	2
	50072729	Rod, Chain - Rear Center Deck	1
	50017264	Chain, Plated - 5 Link	44
	50018912	Chain, Plated - 4 Link	1
5	**50069736**	**Chain Assy, Rear Axle**	**2**
	50068728	Support, Rear Chain Axle	1
	50069722	Rod, Chain-Wing Axle	1
	50017211	Chain, Plated - 6 Link	28
6	**50073038**	**Chain Bracket Assy, LH - Outer Wing**	**1**
	50073036	Bracket, Outer Chain - LH	1
	50018912	Chain, Plated - 4 Link	8
	50073323	Cable, Chain - 12.75”	1
	50050408	Sleeve, Stop	2
7	**50073037**	**Chain Bracket Assy, RH - Outer Wing**	**1**
	50073034	Bracket, Outer Chain - RH	1
	50018912	Chain, Plated - 4 Link	8
	50073323	Cable, Chain - 12.75”	1
	50050408	Sleeve, Stop	2
8	**50073395**	**Chain Bracket Assy, RH - Inner Wing**	**1**
	50073394	Bracket, Inner Chain - RH	1
	50017264	Chain, Plated - 5 Link	11
	50018912	Chain, Plated - 4 Link	2
	50073392	Cable, Chain - 17.25”	1
	50050408	Sleeve, Stop	2
9	**50073393**	**Chain Bracket Assy, LH - Inner Wing**	**1**
	50073390	Bracket, Inner Chain - LH	1
	50017264	Chain, Plated - 5 Link	11
	50018912	Chain, Plated - 4 Link	2
	50073392	Cable, Chain - 17.25”	1
	50040408	Sleeve, Stop	2
10	50017264	Chain, Plated - 5 Link	8
11	15093	Capscrew, 1/2” x 1-1/2” Gr. 5	8
12	5161614	Carriage Bolt, 1/2” x 1-1/2”	38
13	15806	Lockwaser, 1/2”	46
14	15916	Flatwasher, 1/2”	46
15	8151600	Hex Nut, 1/2”“	46
16	44109BH	Carriage Bolt, 3/8” x 1”	6
17	15812	Lockwasher, 3/8”	6
18	15915BH	Flatwasher, 3/8”	6
19	8151200	Hex Nut, 3/8”	6

© 2016 Alamo Group Inc.

FRONT AND REAR
DOUBLE ROW HIGHWAY CHAINS
2215R1,2215RR1 (540 RPM Models)
12215R1, 12215RR1 (1000 RPM Models)

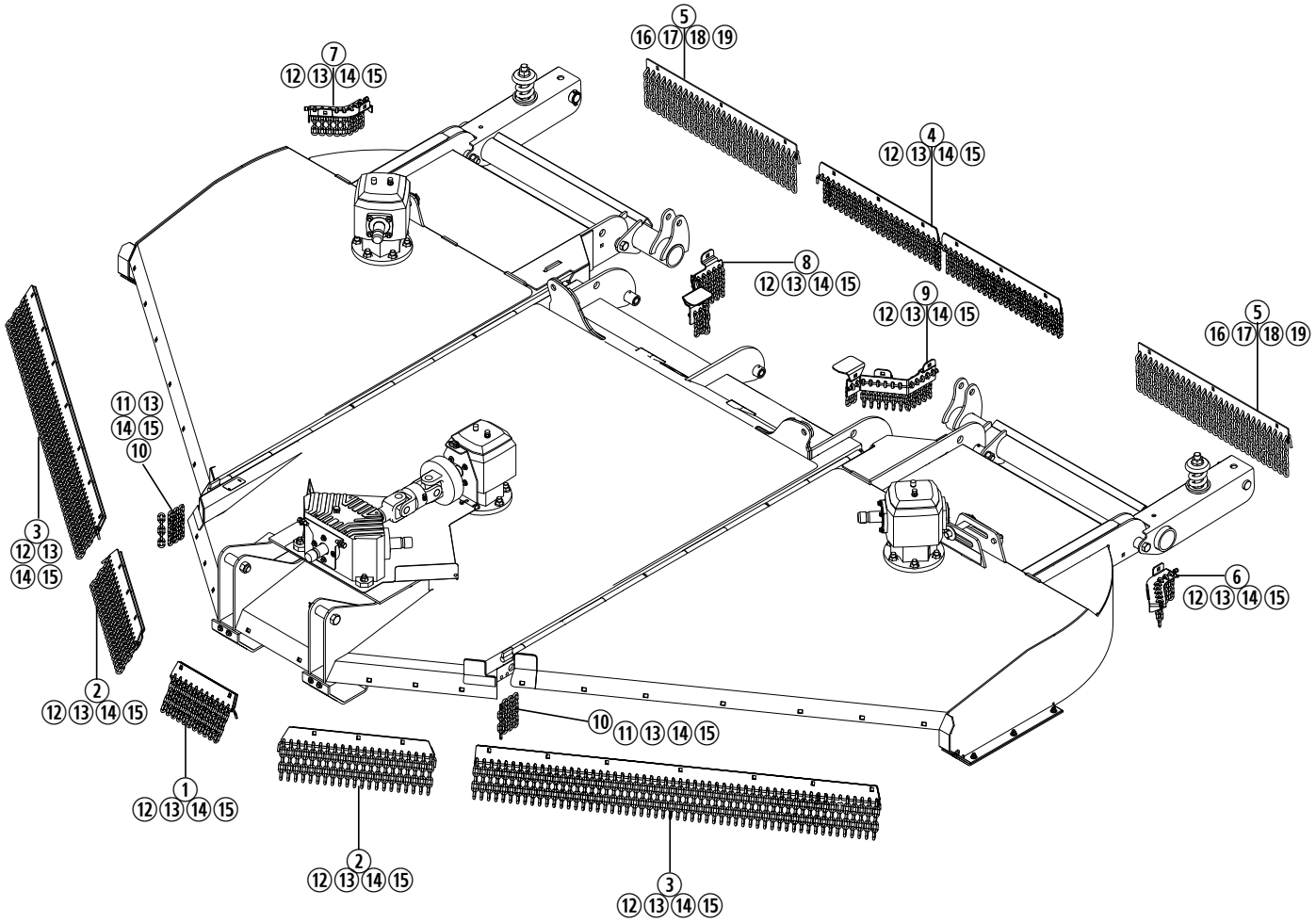

© 2016 Alamo Group Inc.

FRONT AND REAR DOUBLE ROW HIGHWAY CHAINS 2215R1,2215RR1 (540 RPM Models) 12215R1, 12215RR1 (1000 RPM Models)

REF. NO.	PART NO.	DESCRIPTION	QTY.
1	**50073415**	**Chain Assy, Center Front**	**1**
	50072731	Support, Front Center Chain	1
	50072733	Rod, Chain	1
	50029803	Chain, Plated - 9 Link	11
2	**50071751**	**Chain Assy, Center Front Side**	**2**
	50071742	Support, Front Outside Chain	1
	50071831	Rod, Chain	1
	50029803	Chain, Plated - 9 Link	21
3	**50071749**	**Chain Assy, Front Wing Chain**	**2**
	50071622	Support, Front	1
	50069719	Rod, Chain	1
	50029803	Chain, Plated - 9 Link	56
4	**50073416**	**Chain Assy, Center Rear**	**1**
	50072728	Support, Rear Chain	2
	50072729	Rod, Chain - Rear Center Deck	1
	50029803	Chain, Plated - 9 Link	44
	50017212	Chain, Plated - 7Link	1
5	**50070271**	**Chain Assy, Rear Axle**	**2**
	50069728	Support, Rear Chain Axle	1
	50069722	Rod, Chain-Wing Axle	1
	50017213	Chain, Plated - 11 Link	28
6	**50073419**	**Chain Bracket Assy, LH - Outer Wing**	**1**
	50073036	Bracket, Outer Chain - LH	1
	50017212	Chain, Plated - 7 Link	8
	50073323	Cable, Chain - 12.75”	1
	50050408	Sleeve, Stop	2
7	**50073418**	**Chain Bracket Assy, RH - Outer Wing**	**1**
	50073034	Bracket, Outer Chain - RH	1
	50017212	Chain, Plated - 7 Link	8
	50073323	Cable, Chain - 12.75”	1
	50050408	Sleeve, Stop	2
8	**50073435**	**Chain Bracket Assy, RH - Inner Wing**	**1**
	50073394	Bracket, Inner Chain - RH	1
	50029803	Chain, Plated - 9 Link	11
	50017212	Chain, Plated - 7 Link	2
	50073392	Cable, Chain - 17.25”	1
	50050408	Sleeve, Stop	2
9	**50073434**	**Chain Bracket Assy, LH - Inner Wing**	**1**
	50073390	Bracket, Inner Chain - LH	1
	50029803	Chain, Plated - 9 Link	11
	50017212	Chain, Plated - 7 Link	2
	50073392	Cable, Chain - 17.25”	1
	50040408	Sleeve, Stop	2
10	50017264	Chain, Plated - 5 Link	8
11	15093	Capscrew, 1/2” x 1-1/2” Gr. 5	8
12	5161614	Carriage Bolt, 1/2” x 1-1/2”	38
13	15806	Lockwaser, 1/2”	46
14	15916	Flatwasher, 1/2”	46
15	8151600	Hex Nut, 1/2”“	46
16	44109BH	Carriage Bolt, 3/8” x 1”	6
17	15812	Lockwasher, 3/8”	6
18	15915BH	Flatwasher, 3/8”	6
19	8151200	Hex Nut, 3/8”	6

© 2016 Alamo Group Inc.

CENTER SHIELD ASSEMBLY
2215R1,2215RR1 (540 RPM Models)
12215R1, 12215RR1 (1000 RPM Models)

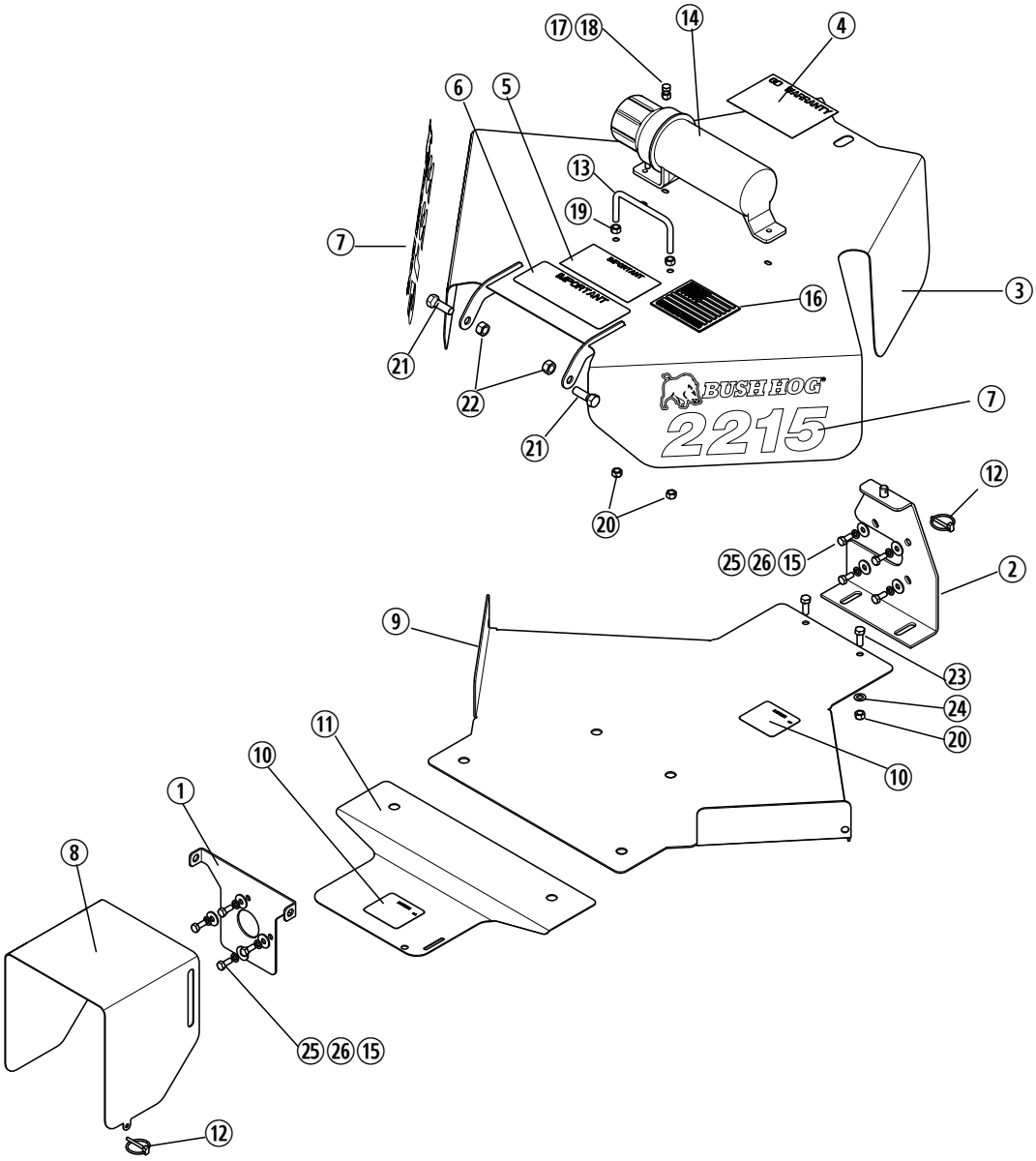

REF. NO.	PART NO.	DESCRIPTION	QTY.	REF. NO.	PART NO.	DESCRIPTION	QTY.
1	50073021	Mount, Shield	1	14	50035829	Tube, Owner's Manual	1
2	50070528	Support Wldmt, Rear Shield	1	15	44216	Flatwasher, M8	8
3	50076873	Center Shield w/Decals	1	16	50074259	Flag Decal	1
4	-------	Decal, Warranty	1	17	1161006	Capscrew, 5/16" x 3/4" Gr.5	3
5	91443	Decal, Important	1	18	9161000	Locknut, 5/16" Gr C	3
6	87340	Decal, Important	1	19	8151200	Hex Nut, 3/8"	2
7	50076893	Decal, Model - 2215	2	20	9131200	Locknut, 3/8" Gr C	4
	50076894	Decal, Model - 12215	2	21	15093	Capscrew, 1/2" x 1-1/2" Gr. 5	2
8	50074726	Input Shield, Top	1	22	15554	Locknut, 1/2"	2
9	50074740	Center Shield Bott. w/Decal	1	23	20034	Capscrew, 3/8" x 1" Gr. 5	2
10	D546	Decal, Danger (Guard Missing)	1	24	15830	Flatwasher, 3/8" SAE	2
11	50074741	Center Shield Bott. Frt. w/Decal	1	25	44315BH	Capscrew, M8 x 1.25 x 20 Gr. 8.8	8
12	69391	Lynch Pin	2	26	44311BH	Lockwasher M8	8
13	50027637	U-Bolt, Foot Platform	1				

© 2016 Alamo Group Inc.

WING DRIVELINE SHIELDING
2215R1,2215RR1 (540 RPM Models)
12215R1, 12215RR1 (1000 RPM Models)

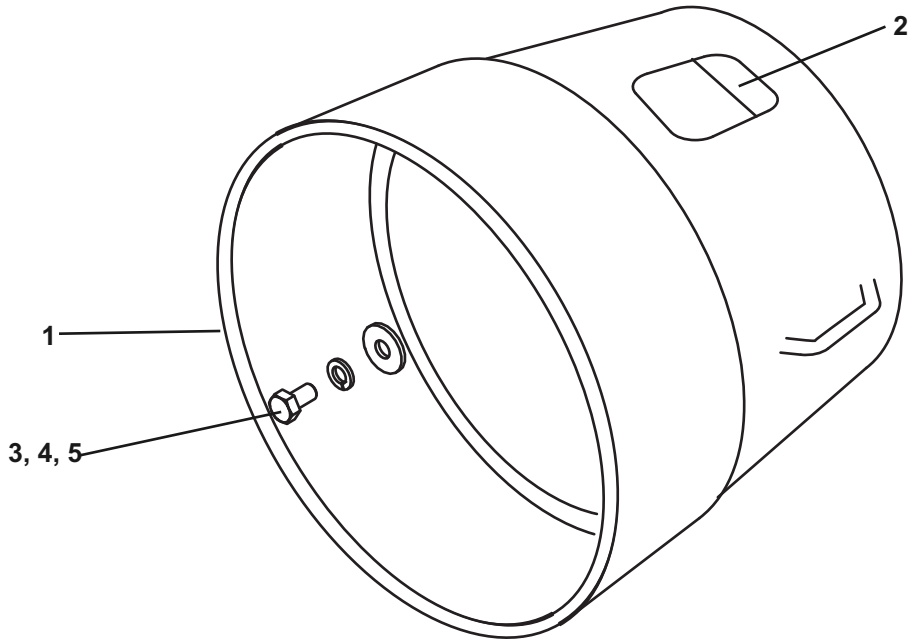

REF. NO.	PART NO.	DESCRIPTION	QTY.
1	81592	Input Shield	1
2	68551	Windows	2
3	44215	Capscrew, M8 x 1.25 x 15 G 8.8	4
4	44311BH	Lockwasher, M8	4
5	44216	Flatwasher, M8	4

© 2016 Alamo Group Inc.

71202 TRANSFER GEARBOX ASSEMBLY. - *540 RPM*

MFG. BY COMER

2215R1,2215RR1 (540 RPM Models)

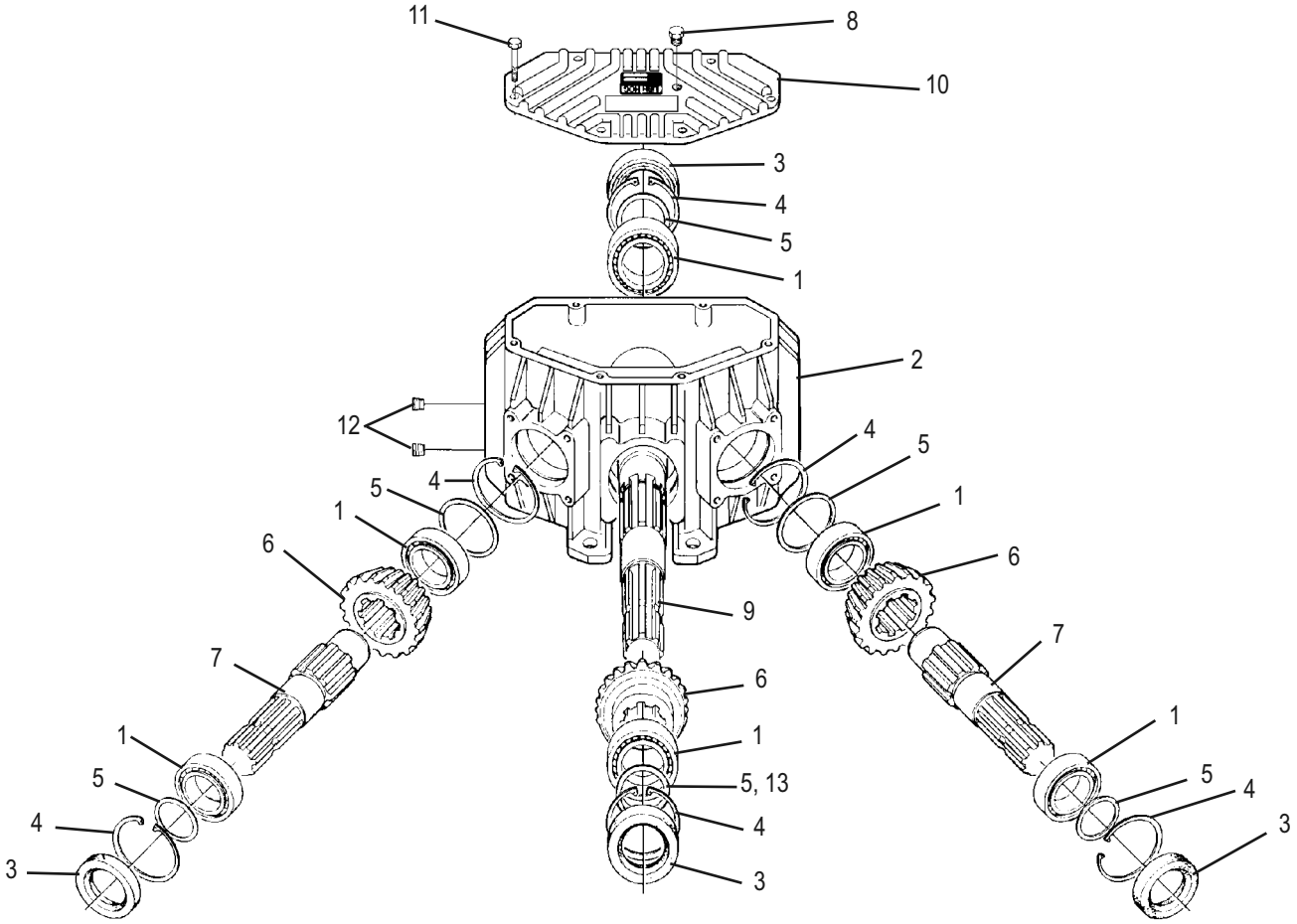

REF. NO.	PART NO.	DESCRIPTION	QTY.
	71202	**Assembly, Transfer Gearbox**	**1**
1	70796	Bearing	6
2	76671	Casing	1
3	50068116	Oil Seal	4
4	70881	Snap Ring	6
5	70752	Shim .3	6
6	50076037	Gear Kit (1 - 24T & 2 - 20T Gears)	1
7	76673	Shaft, 1-3/4” Z20	2
8	80538	Vent Plug	1
9	76675	Shaft, 1-3/4” Z20	1
10	76676	Cover	1
11	44489BH	Capscrew M10 x 1.5 x 35 Gr. 8.8	6
12	70181	Gas Plug, 3/8”	2
13	70753	Shim .4	6
	70754	Shim .5	6
	70755	Shim .6	6

© 2016 Alamo Group Inc.

50072724 TRANSFER GEARBOX ASSEMBLY - *1000 RPM*

MFG. BY COMER

12215R1, 12215RR1 (1000 RPM Models)

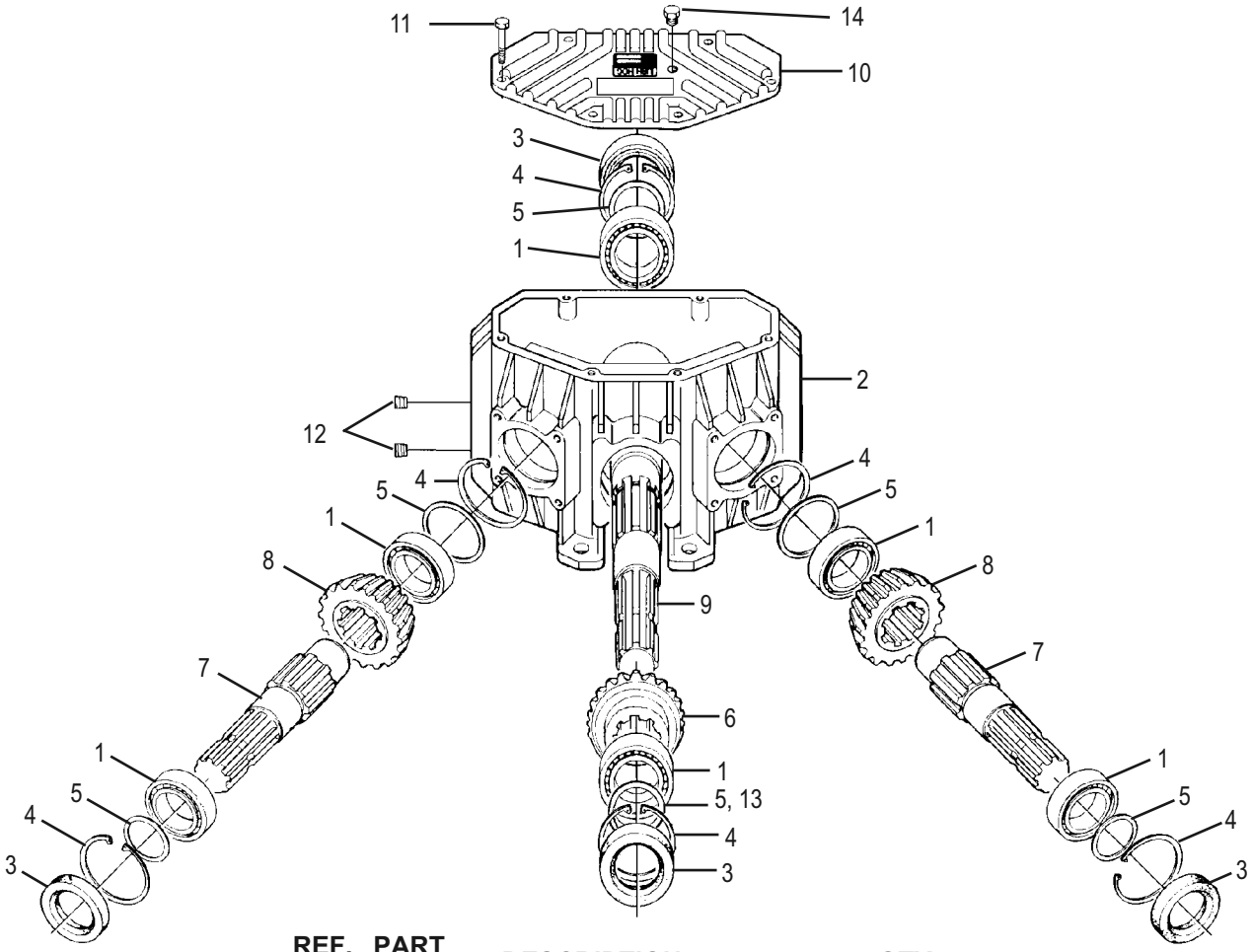

REF. NO.	PART NO.	DESCRIPTION	QTY.
	50072724	**Assembly, Transfer Gearbox**	**1**
1	70796	Bearing	6
2	76671	Casing	1
3	50068116	Oil Seal	4
4	70881	Snap Ring	6
5	70752	Shim .3	6
6	50075082	Gear, Set (1000 RPM)	1
7	76673	Shaft 1-3/4” Z20	2
8	50075082	Gear, Set (1000 RPM)	2
9	76675	Shaft, 1-3/4” Z20	1
10	76676	Cover	1
11	44489BH	Capscrew M10 x 1.5 x 35 Gr.8.8	6
12	70181	Gas Plug 3/8”	2
13	70753	Shim .4	6
	70754	Shim .5	6
	70755	Shim .6	6
14	80538	Vent Plug	1

© 2016 Alamo Group Inc.

L.H. WING GEARBOX
FOR
12215R1, 12215RR1 (1000 RPM Models)

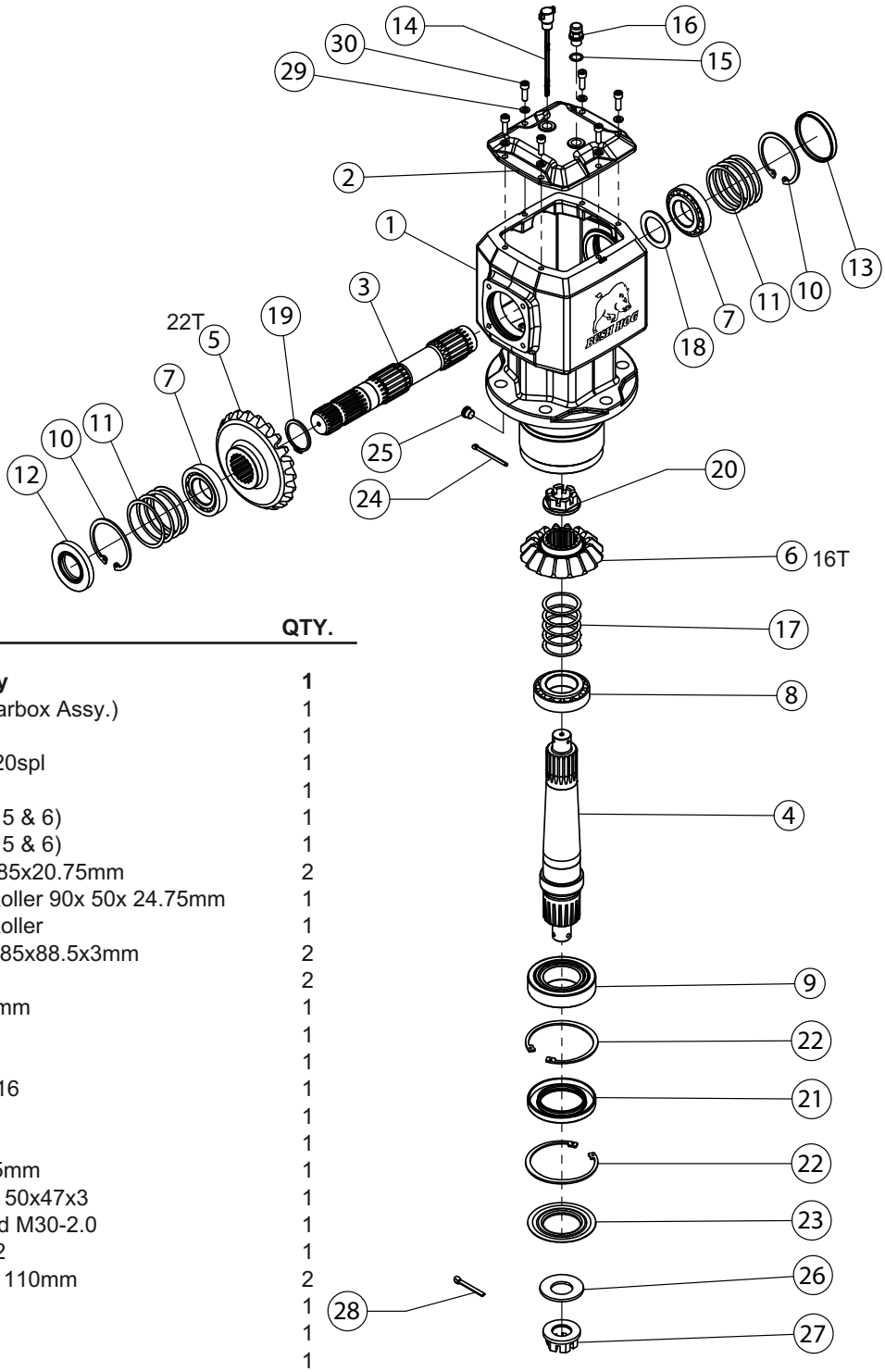

REF. NO.	PART NO.	DESCRIPTION	QTY.
	00790752BH	**Gearbox Assembly**	**1**
1	-------	Housing (Order Gearbox Assy.)	1
2	-------	Cap, Top	1
3	00790719	Shaft, Input 1-3/4”-20spl	1
4	00790720	Shaft, Output	1
5	00790747	Gear Set Kit (Items 5 & 6)	1
6	00790747	Gear Set Kit (Items 5 & 6)	1
7	70796	Bearing, Roller 45x85x20.75mm	2
8	50025423	Bearing, Tapered Roller 90x 50x 24.75mm	1
9	00777095	Bearing, Tapered Roller	1
10	00755618	Snap Ring Din 472 85x88.5x3mm	2
11	00791066	Shim Kit, Input	2
12	50068116	Seal, Oil 45x85x10mm	1
13	50074092	Sight Window	1
14	00790732	Dipstick,Oil	1
15	00790983	Washer, Sealing M16	1
16	00790985	Plug, Vent M16-1.5	1
17	00790939	Shim Kit	1
18	00755632	Shim 45.3x65.3x2.5mm	1
19	2516460	Snap Ring External 50x47x3	1
20	00790937	Nut, Slotted Flanged M30-2.0	1
21	00790740	Seal, Oil 70x110x12	1
22	50025469	Snap Ring, Internal 110mm	2
23	00790731	Shield, Protective	1
24	70499	Cotter Pin M5x63	1
25	00791032	Plug, Socket Hd.	1
26	00786157	Wassher, Spring 36mm	1
27	70418	Nut, Castle M36x3.0	1
28	00786155	Cotter Pin M6 x 65mm	1
29	44311BH	Washer, Helical LockM8	6
30	00790896	Bolt, Socket Hd. M8-1.25x20	6

© 2016 Alamo Group Inc.

L.H. WING DECK & CENTER DECK GEARBOX FOR 2215R1,2215RR1 (540 RPM Models)

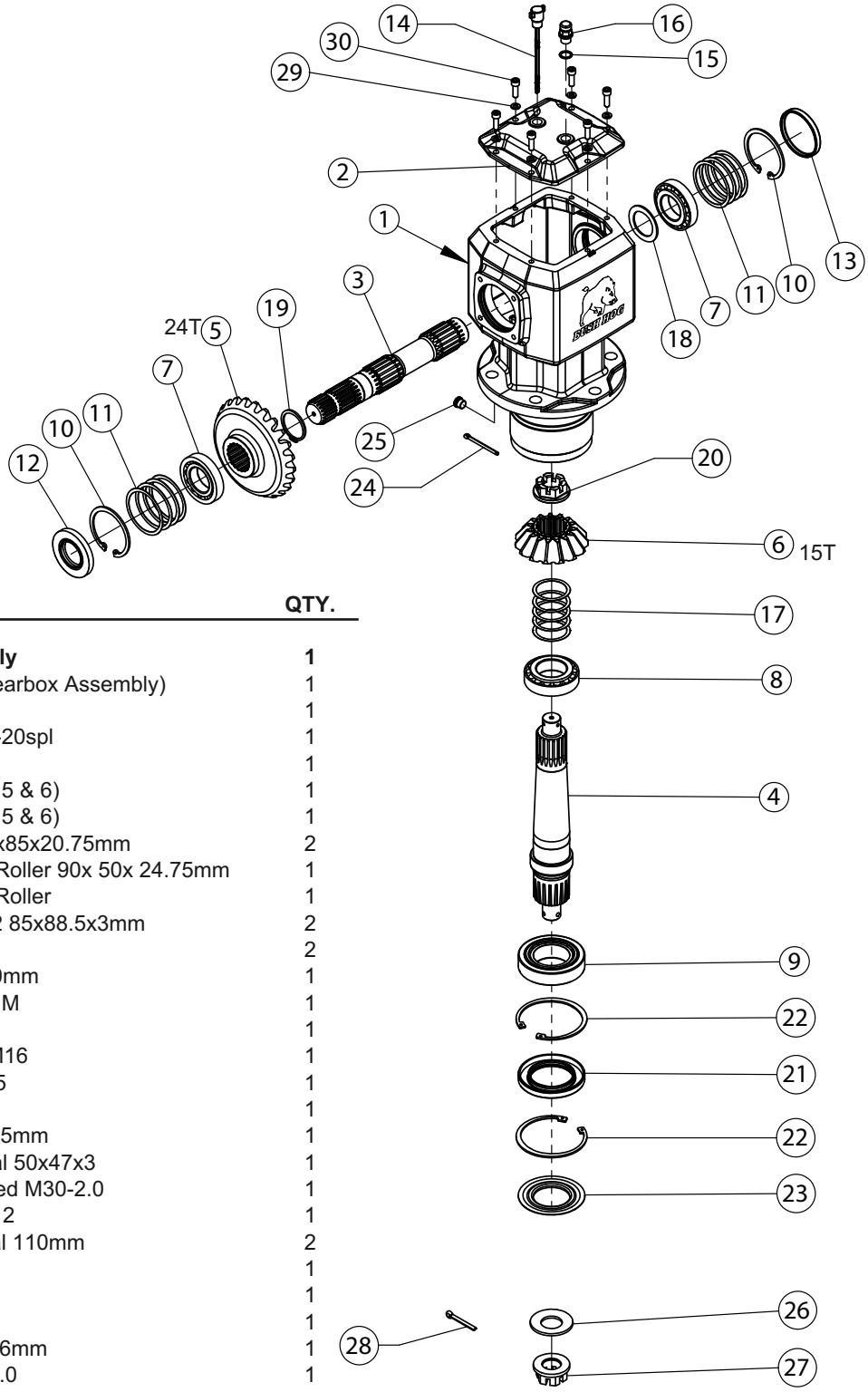

REF. NO.	PART NO.	DESCRIPTION	QTY.
	00790748BH	**Gearbox Assembly**	**1**
1	----------	Housing (Order Gearbox Assembly)	1
2	----------	Cap, Top	1
3	00790719	Shaft, Input 1-3/4”-20spl	1
4	00790720	Shaft, Output	1
5	00790746	Gearset Kit (Items 5 & 6)	1
6	00790746	Gearset Kit (Items 5 & 6)	1
7	70796	Bearing, Roller 45x85x20.75mm	2
8	50025423	Bearing, Tapered Roller 90x 50x 24.75mm	1
9	00777095	Bearing, Tapered Roller	1
10	00755618	Snap Ring Din 472 85x88.5x3mm	2
11	00791066	Shim Kit, Input	2
12	50068116	Seal, Oil 45x85x10mm	1
13	50074092	Sight Window 85MM	1
14	00790732	Dipstick,Oil	1
15	00790983	Washer, Sealing M16	1
16	00790985	Plug, Vent M16-1.5	1
17	00790939	Shim Kit	1
18	00755632	Shim 45.3x65.3x2.5mm	1
19	2516460	Snap Ring External 50x47x3	1
20	00790937	Nut, Slotted Flanged M30-2.0	1
21	00790740	Seal, Oil 70x110x12	1
22	50025469	Snap Ring, Internal 110mm	2
23	00790731	Shield, Protective	1
24	70499	Cotter Pin M5x63	1
25	00791032	Plug, Socket Hd.	1
26	00786157	Wassher, Spring 36mm	1
27	70418	Nut, Castle M36x3.0	1
28	00786155	Cotter Pin M6 x 65mm	1
29	44311BH	Washer, Helical LockM8	6
30	00790896	Bolt, Socket Hd. M8-1.25x20	6

© 2016 Alamo Group Inc.

CENTER DECK GEARBOX
FOR
12215R1, 12215RR1 (1000 RPM Models)

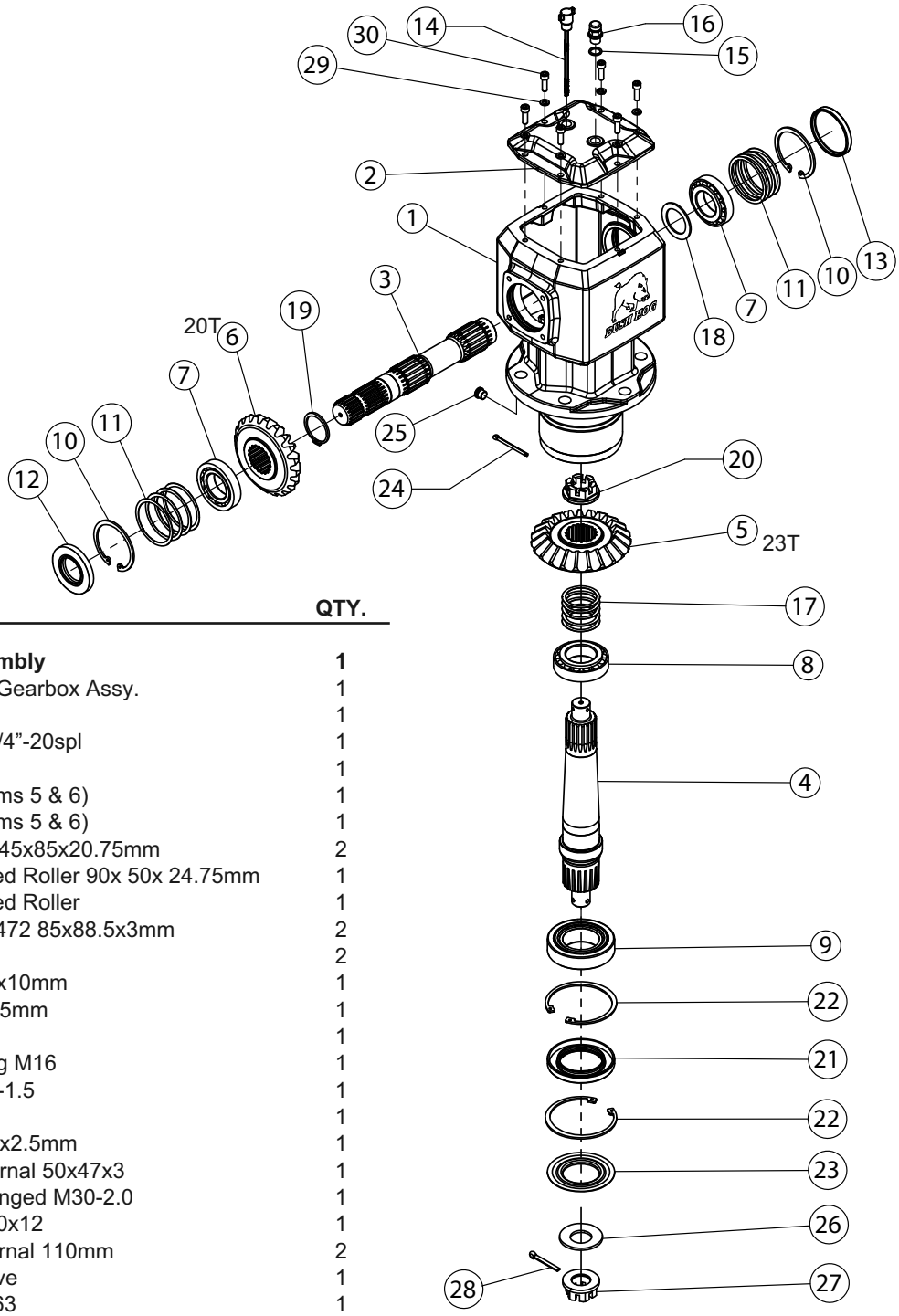

REF. NO.	PART NO.	DESCRIPTION	QTY.
	00790703BH	**Gearbox Assembly**	**1**
1	----------	Housing Order Gearbox Assy.	1
2	----------	Cap, Top	1
3	00790719	Shaft, Input 1-3/4”-20spl	1
4	00790720	Shaft, Output	1
5	00790736	Gearset Kit (Items 5 & 6)	1
6	00790736	Gearset Kit (Items 5 & 6)	1
7	70796	Bearing, Roller 45x85x20.75mm	2
8	50025423	Bearing, Tapered Roller 90x 50x 24.75mm	1
9	00777095	Bearing, Tapered Roller	1
10	00755618	Snap Ring Din 472 85x88.5x3mm	2
11	00791066	Shim Kit, Input	2
12	50068116	Seal, Oil 45x85x10mm	1
13	50074092	Sight Window 85mm	1
14	00790732	Dipstick,Oil	1
15	00790983	Washer, Sealing M16	1
16	00790985	Plug, Vent M16-1.5	1
17	00790939	Shim Kit	1
18	00755632	Shim 45.3x65.3x2.5mm	1
19	2516460	Snap Ring External 50x47x3	1
20	00790937	Nut, Slotted Flanged M30-2.0	1
21	00790740	Seal, Oil 70x110x12	1
22	50025469	Snap Ring, Internal 110mm	2
23	00790731	Shield, Protective	1
24	70499	Cotter Pin M5x63	1
25	00791032	Plug, Socket Hd.	1
26	00786157	Wassher, Spring 36mm	1
27	70418	Nut, Castle M36x3.0	1
28	00786155	Cotter Pin M6 x 65mm	1
29	44311BH	Washer, Helical LockM8	6
30	00790896	Bolt, Socket Hd. M8-1.25x20	6

© 2016 Alamo Group Inc.

RH WING DECK GEARBOX
FOR
2215R1,2215RR1 (540 RPM Models)

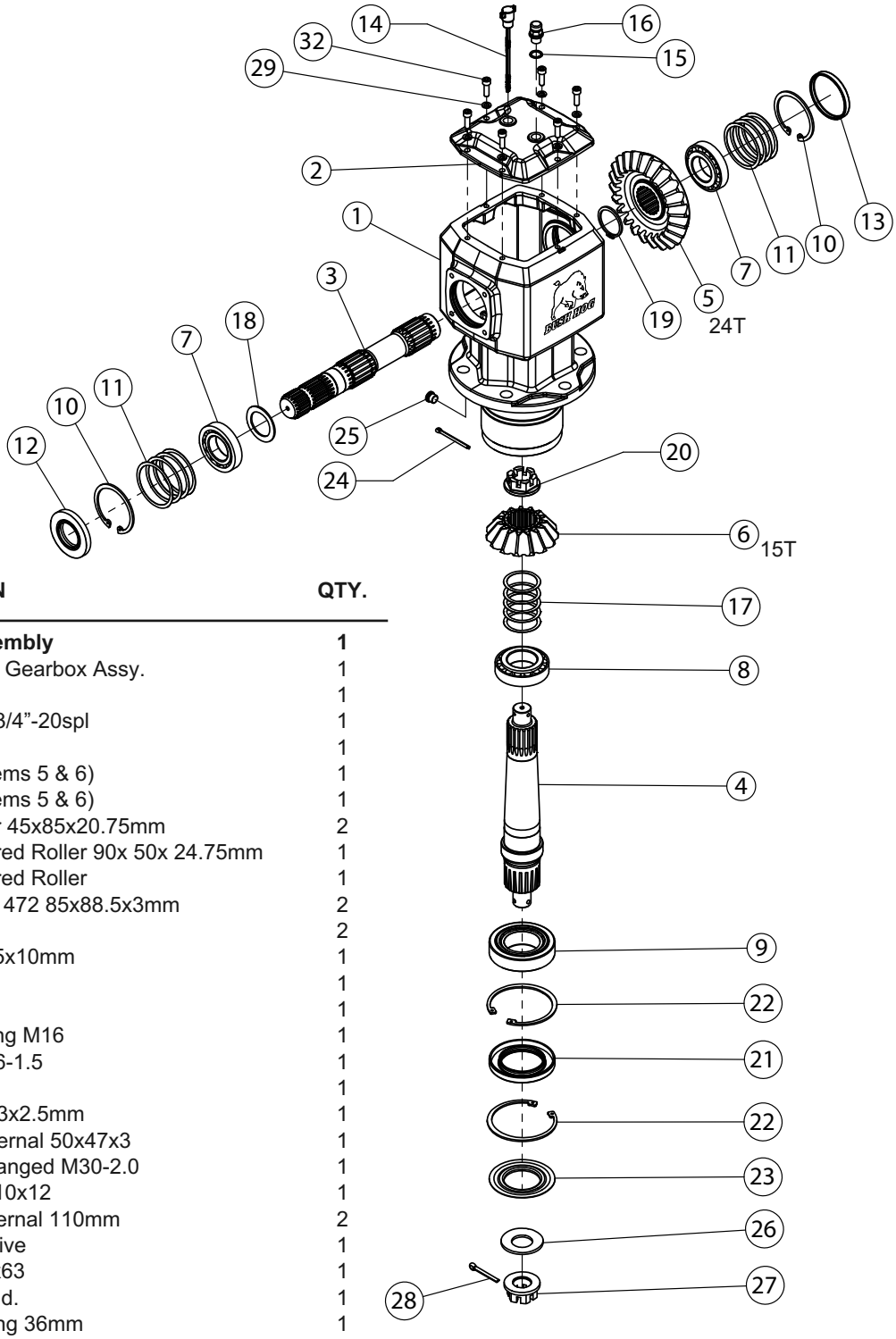

REF. NO.	PART NO.	DESCRIPTION	QTY.
	00790749BH	**Gearbox Assembly**	**1**
1	----------	Housing Order Gearbox Assy.	1
2	----------	Cap, Top	1
3	00790719	Shaft, Input 1-3/4”-20spl	1
4	00790720	Shaft, Output	1
5	00790746	Gearset Kit (items 5 & 6)	1
6	00790746	Gearset Kit (items 5 & 6)	1
7	70796	Bearing, Roller 45x85x20.75mm	2
8	50025423	Bearing, Tapered Roller 90x 50x 24.75mm	1
9	00777095	Bearing, Tapered Roller	1
10	00755618	Snap Ring Din 472 85x88.5x3mm	2
11	00791066	Shim Kit, Input	2
12	50068116	Seal, Oil 45x85x10mm	1
13	50074092	Sight Window	1
14	00790732	Dipstick,Oil	1
15	00790983	Washer, Sealing M16	1
16	00790985	Plug, Vent M16-1.5	1
17	00790939	Shim Kit	1
18	00755632	Shim 45.3x65.3x2.5mm	1
19	2516460	Snap Ring External 50x47x3	1
20	00790937	Nut, Slotted Flanged M30-2.0	1
21	00790740	Seal, Oil 70x110x12	1
22	50025469	Snap Ring, Internal 110mm	2
23	00790731	Shield, Protective	1
24	70499	Cotter Pin M5x63	1
25	00791032	Plug, Socket Hd.	1
26	00786157	Wassher, Spring 36mm	1
27	70418	Nut, Castle M36x3.0	1
28	00786155	Cotter Pin M6 x 65mm	1
29	44311BH	Washer, Helical LockM8	6
30	00790896	Bolt, Socket Hd. M8-1.25x20	6

© 2016 Alamo Group Inc.

RH WING DECK GEARBOX
FOR
12215R1, 12215RR1 (1000 RPM Models)

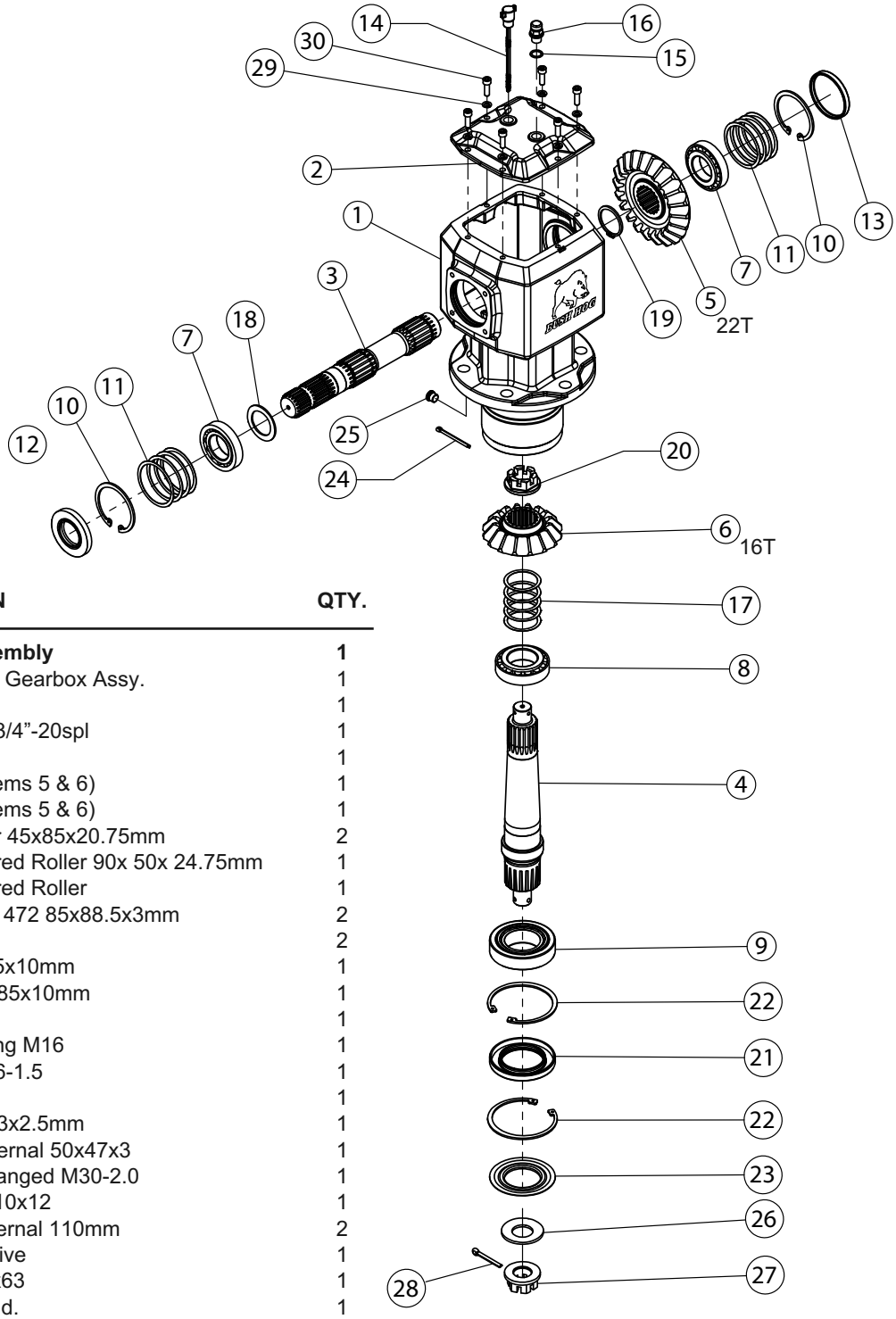

REF. NO.	PART NO.	DESCRIPTION	QTY.
	00790753BH	**Gearbox Assembly**	**1**
1	---------	Housing Order Gearbox Assy.	1
2	---------	Cap, Top	1
3	00790719	Shaft, Input 1-3/4”-20spl	1
4	00790720	Shaft, Output	1
5	00790742	Gearset Kit (Items 5 & 6)	1
6	00790742	Gearset Kit (Items 5 & 6)	1
7	70796	Bearing, Roller 45x85x20.75mm	2
8	50025423	Bearing, Tapered Roller 90x 50x 24.75mm	1
9	00777095	Bearing, Tapered Roller	1
10	00755618	Snap Ring Din 472 85x88.5x3mm	2
11	00791066	Shim Kit, Input	2
12	50068116	Seal, Oil 45x85x10mm	1
13	50074092	Sight Window 85x10mm	1
14	00790732	Dipstick,Oil	1
15	00790983	Washer, Sealing M16	1
16	00790985	Plug, Vent M16-1.5	1
17	00790939	Shim Kit	1
18	00755632	Shim 45.3x65.3x2.5mm	1
19	2516460	Snap Ring External 50x47x3	1
20	00790937	Nut, Slotted Flanged M30-2.0	1
21	00790740	Seal, Oil 70x110x12	1
22	50025469	Snap Ring, Internal 110mm	2
23	00790731	Shield, Protective	1
24	70499	Cotter Pin M5x63	1
25	00791032	Plug, Socket Hd.	1
26	00786157	Wassher, Spring 36mm	1
27	70418	Nut, Castle M36x3.0	1
28	00786155	Cotter Pin M6 x 65mm	1
29	44311BH	Washer, Helical LockM8	6
30	00790896	Bolt, Socket Hd. M8-1.25x20	6

© 2016 Alamo Group Inc.

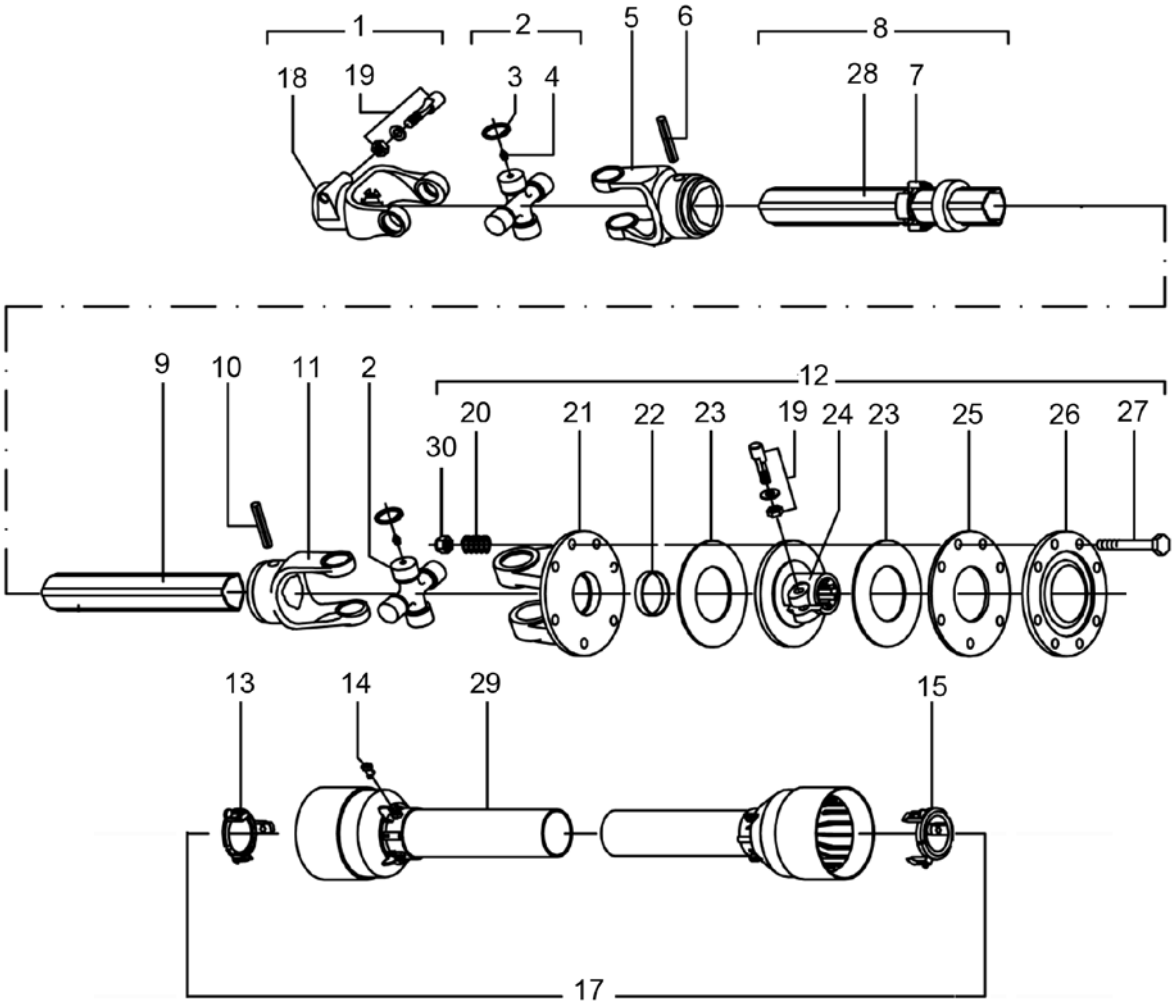

50075799 WING DRIVESHAFT
2215R1,2215RR1 (540 RPM Models)
12215R1, 12215RR1 (1000 RPM Models)
1-3/4" - 20 Spline
Manufactured by Comer/EG
ASAE SIZE 4

REF. NO.	PART NO.	DESCRIPTION	QTY.	REF. NO.	PART NO.	DESCRIPTION	QTY.
	50075799	**Assembly, Driveline w/Clutch**	**1**	15	50056418	Guard Ret. Collar (Inner Tube)	1
1	76422	Complete Yoke	1	17	50075798	Complete Guard w/Inst. Manual	1
2	50060543	Cross Journal Set	2	18	------	Yoke	1
3	------	Circlip	8	19	76247	Tapered Pin Set, 1-3/4"	2
4	76335	Grease Nipple	2	20	76080	Spring	8
5	66865	Outer Yoke	1	21	76331	Flanged Yoke	1
6	66866	Roll Pin For Outer Tube	1	22	76082	Bushing	1
7	50064188	Bushing w/Grease Fitting	1	23	76083	Lining Ring	2
8	50075797	Complete Outer Tube	1	24	76309	Clutch Support	1
9	50071239	Inner Tube	1	25	76085	Inner Plate	1
10	66869	Roll Pin For Inner Tube	1	26	76086	Pressure Plate	1
11	66870	Inner Yoke	1	27	44155BH	Capscrew, M10 x 1.5 x 85	8
12	76308	Complete Disc Clutch	1	28	78786	Decal, Danger - Outer Tube	1
13	50056417	Guard Ret. Collar (Outer Tube)	1	29	78608	Decal, Danger - Outer Guard Tube	1
14	50056404	Bolt	6	30	44154BH	Locknut, M10 x 1.5	8

© 2016 Alamo Group Inc.

50071438 CENTER DRIVESHAFT
2215R1,2215RR1 (540 RPM Models)
12215R1, 12215RR1 (1000 RPM Models)
1-3/4" — 20 Spline
Manufactured by Comer / EG

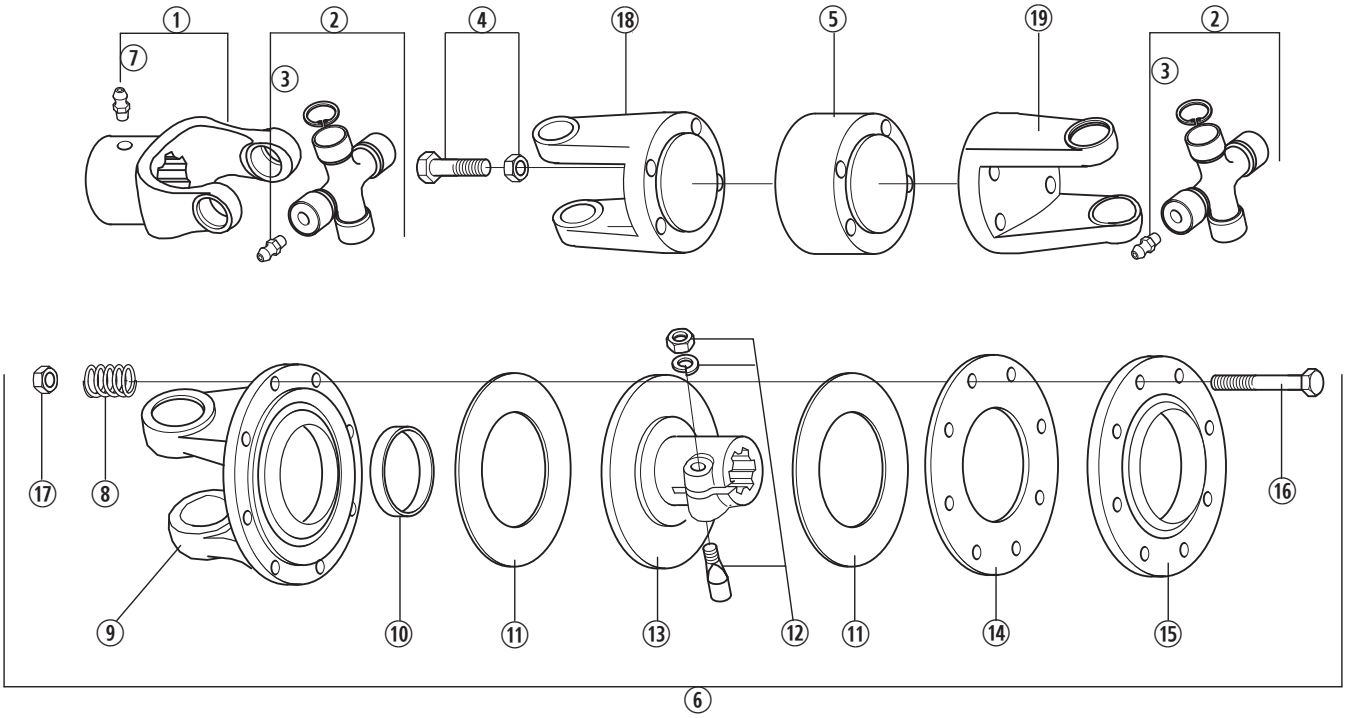

REF. NO.	PART NO.	DESCRIPTION	QTY.
	50071438	**Assembly, Driveline w/Clutch**	**1**
1	76782	Yoke w/Grease Nipple	1
2	50060543	Cross Journal Set	2
3	76335	Grease Nipple	2
4	50072442	Capscrew, M12 x 1.25 x 80 Gr. 12.9 w/Locknut M12	4
5	50072443	Retaining Washer	1
6	76308	Complete Disc Clutch	1
7	63946	Grease Nipple	1
8	76080	Spring	8
9	76164	Flanged Yoke	1
10	76082	Bushing	1
11	76083	Lining Ring	2
12	76247	Tapered Pin Set 1-3/4"	1
13	76309	Clutch Support	1
14	76085	Inner Plate	1
15	76086	Pressure Plate	1
16	44155BH	Capscrew, M10 x 1.5 x 85	8
17	44154BH	Locknut, M10 x 1.5	8
18	76914	Flanged Yoke, Male	1
19	76915	Flanged Yoke, Female	1

© 2016 Alamo Group Inc.

50069764SP C.V. Driveshaft

Input : 1-3/8" – 6 Spline, ASAE Size 5

Manufactured by Comer / EG

2215R1,2215RR1 (540 RPM Models)

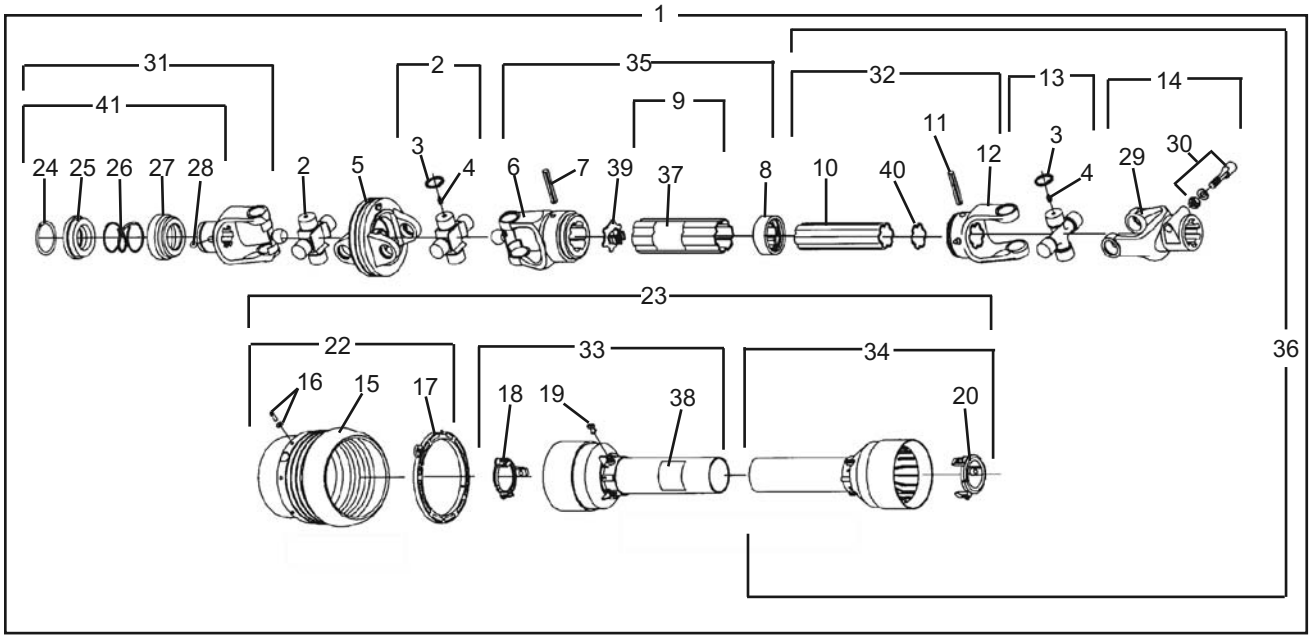

REF. NO.	PART NO.	DESCRIPTION	QTY.	REF. NO.	PART NO.	DESCRIPTION	QTY.
1	**50069764SP**	**Driveshaft Assembly**	**1**	22	50056406	Guard Cone Set	1
2	50056400	Cross Journal Set	2	23	50071245	Complete Guard w/Inst. Manual	1
3	------	Circlip	12	24	------	Outer Circlip	1
4	76335	Grease Nipple	3	25	------	Sliding Sleeve Collar	1
5	76357	Wide Angle Double Yoke	1	26	------	Spring	1
6	76896	Outer Yoke	1	27	------	Fixed Sleeve	1
7	67108	Roll Pin - Outer & Inner Tube	1	28	------	Ball, 1/2"	3
8	76897	Wiper	1	29	------	Yoke (See Item 14)	1
9	50071242	Complete Outer Tube	1	30	76247	Tapered Pin Set 1-3/4"	1
10	50071243	Inner Tube	1	31	50017504	Yoke Assy. 1-3/8 - 6 Spline	1
11	67085	Roll Pin For Inner Tube	1	32	------	Male Tube w/Yoke	1
12	50071244	Inner Yoke	1	33	------	Half Female Guarding w/Label	1
13	50056401	Cross Journal Set	1	34	------	Half Male Guarding (See Item 23)	1
14	76239BH	Complete Yoke	1	35	------	Female Shaft (See Item 1)	1
15	------	Guard Cone	1	36	50071246	Half Male Shaft w/Guarding	1
16	76362	Screw Kit	6	37	78786	Decal, Danger - Outer Tube	1
17	50056402	Bearing Ring	1	38	78608	Decal, Danger - Outer Guard Tube	1
18	50056403	Guard Ret. Collar - Outer Tube	1	39	76899	Plastic Cap - Outer Tube	1
19	50056404	Bolt	6	40	50071247	Plastic Cap - Inner Tube	1
20	50056405	Guard Ret. Collar - Inner Tube	1	41	50017480	Kit Collar For Yoke 1-3/8"	1

© 2016 Alamo Group Inc.

50069765SP C.V. Driveshaft

Input : 1-3/8" – 21 Spline, ASAE Size 5

Manufactured by Comer / EG

12215R1, 12215RR1 (1000 RPM Models)

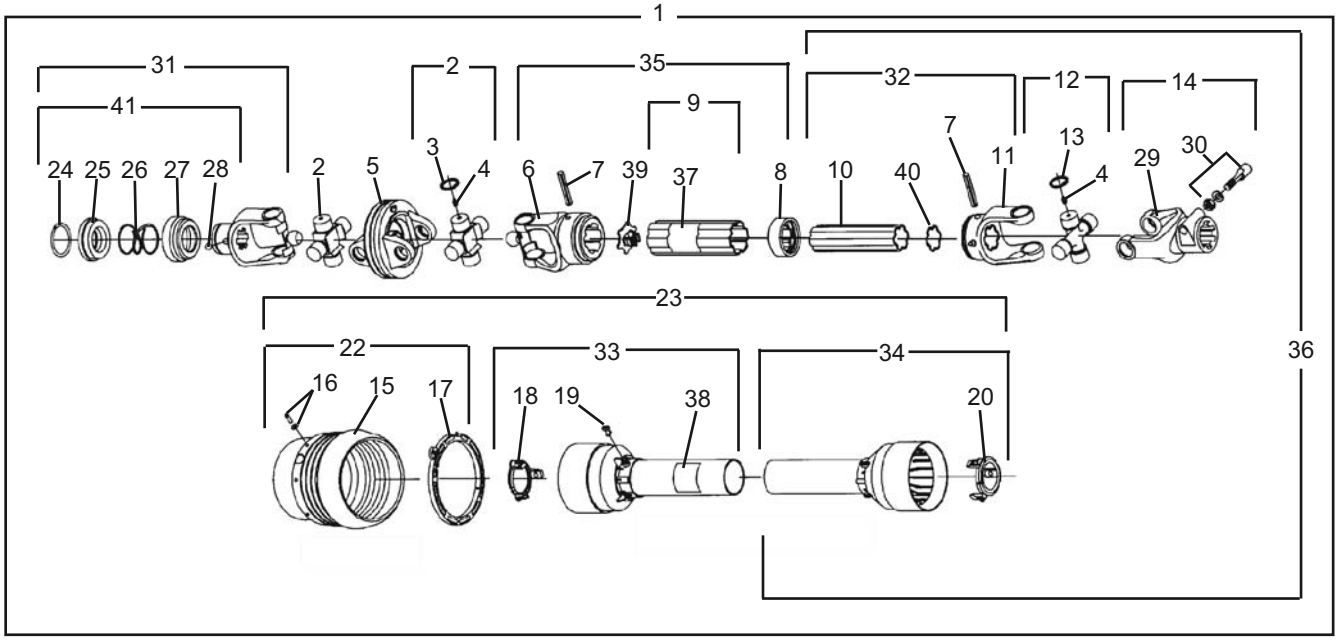

REF. NO.	PART NO.	DESCRIPTION	QTY.	REF. NO.	PART NO.	DESCRIPTION	QTY.
1	**50069765SP**	**Driveshaft Assembly**	**1**	22	50056419	Guard Cone Set	1
2	50056414	Cross Journal Set	2	23	50071251	Complete Guard w/Inst. Manual	1
3	------	Circlip (See Item 2)	8	24	------	Outer Circlip (See Item 31 or 41)	1
4	76335	Grease Nipple	3	25	------	Sliding Sleeve Collar (See Item 31 or 41)	1
5	76421	Wide Angle Double Yoke	1	26	------	Spring (See Item 31 or 41)	1
6	76893	Outer Yoke	1	27	------	Fixed Sleeve (See Item 31 or 41)	1
7	66866	Roll Pin - Outer & Inner Tube	2	28	------	Ball, 1/2" (See Item 31 or 41)	3
8	76894	Wiper	1	29	------	Yoke (See Item 14)	1
9	50071248	Complete Outer Tube	1	30	76247	Tapered Pin Set 1-3/4"	1
10	50071249	Inner Tube	1	31	50017482	Yoke Assy 1-3/8" - 21 Spline	1
11	50071250	Inner Yoke	1	32	------	Male Tube w/Yoke (See Item 36)	1
12	50056411	Cross Journal Set	1	33	------	Half Female Guarding (See Item 23)	1
13	------	Circlip (See Item 12)	4	34	------	Half Male Guarding (See Item 23)	1
14	76422	Complete Yoke	1	35	------	Female Shaft (See Item 1)	1
15	------	Guard Cone (See item 22)	1	36	50071252	Half Male Shaft w/Guarding	1
16	76362	Screw Kit	6	37	78786	Decal, Danger - Outer Tube	1
17	50056416	Bearing Ring	1	38	78608	Decal, Danger - Outer Guard Tube	1
18	50056417	Guard Ret. Collar - Outer Tube	1	39	76892	Plastic Cap - Outer Tube	1
19	50056404	Bolt	6	40	50071253	Plastic Cap - Inner Tube	1
20	50056418	Guard Ret. Collar - Inner Tube	1	41	50017480	Kit Collar For Yoke 1-3/8"	1

© 2016 Alamo Group Inc.

50074699SP C.V. Driveshaft

Input : 1-3/4" – 20 Spline, ASAE Size 5

Manufactured by Comer / EG

12215R1, 12215RR1 (1000 RPM Models)

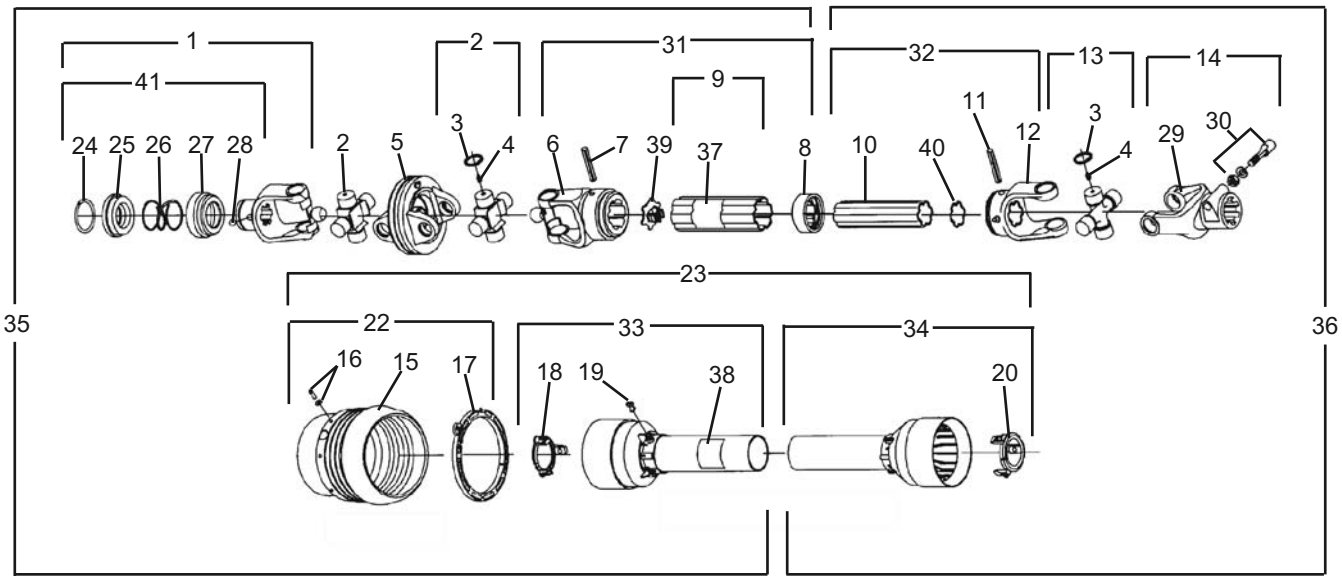

REF. NO.	PART NO.	DESCRIPTION	QTY.
	50074699SP	**Assembly, Driveline**	**1**
1	50056927	Complete Yoke	1
2	50056400	Cross Journal Set	2
3	------	Circlip	12
4	76335	Grease Nipple	3
5	76357	Wide Angle Double Yoke	1
6	76896	Outer Yoke	1
7	67108	Roll Pin - Outer & Inner Tube	1
8	76897	Wiper	1
9	50075190	Complete Outer Tube	1
10	50075191	Inner Tube	1
11	67085	Roll Pin For Inner Tube	1
12	50071244	Inner Yoke	1
13	50056411	Cross Journal Set	1
14	76239BH	Complete Yoke	1
15	------	Guard Cone	1
16	76362	Screw Kit	6
17	50056402	Bearing Ring	1
18	50056403	Guard Ret. Collar - Outer Tube	1
19	50056404	Bolt	6
20	50056405	Guard Ret. Collar - Inner Tube	1
22	50075192	Guard Cone Set	1
23	50075193	Complete Guard w/Inst. Manual	1
24	------	Outer Circlip	1
25	------	Sliding Sleeve Collar	1
26	------	Spring	1
27	------	Fixed Sleeve	1
28	------	Ball, 1/2"	3
29	------	Yoke	1
30	76247	Tapered Pin Set 1-3/4"	1
31	------	Female Tube w/Yoke	1
32	------	Male Tube w/Yoke	1
33	------	Half Female Guarding w/Label	1
34	------	Half Male Guarding	1
35	------	Half Female Shaft w/Guarding	1
36	------	Half Male Shaft w/Guarding	1
37	78786	Decal, Danger - Outer Tube	1
38	78608	Decal, Danger - Outer Guard Tube	1
39	76899	Plastic Cap - Outer Tube	1
40	50071247	Plastic Cap - Inner Tube	1
41	50017502	Kit Collar For Yoke 1-3/4"	1

© 2016 Alamo Group Inc.

TONGUE, LEVELING ROD & RELATED PARTS
2215R1,2215RR1 (540 RPM Models)
12215R1, 12215RR1 (1000 RPM Models)

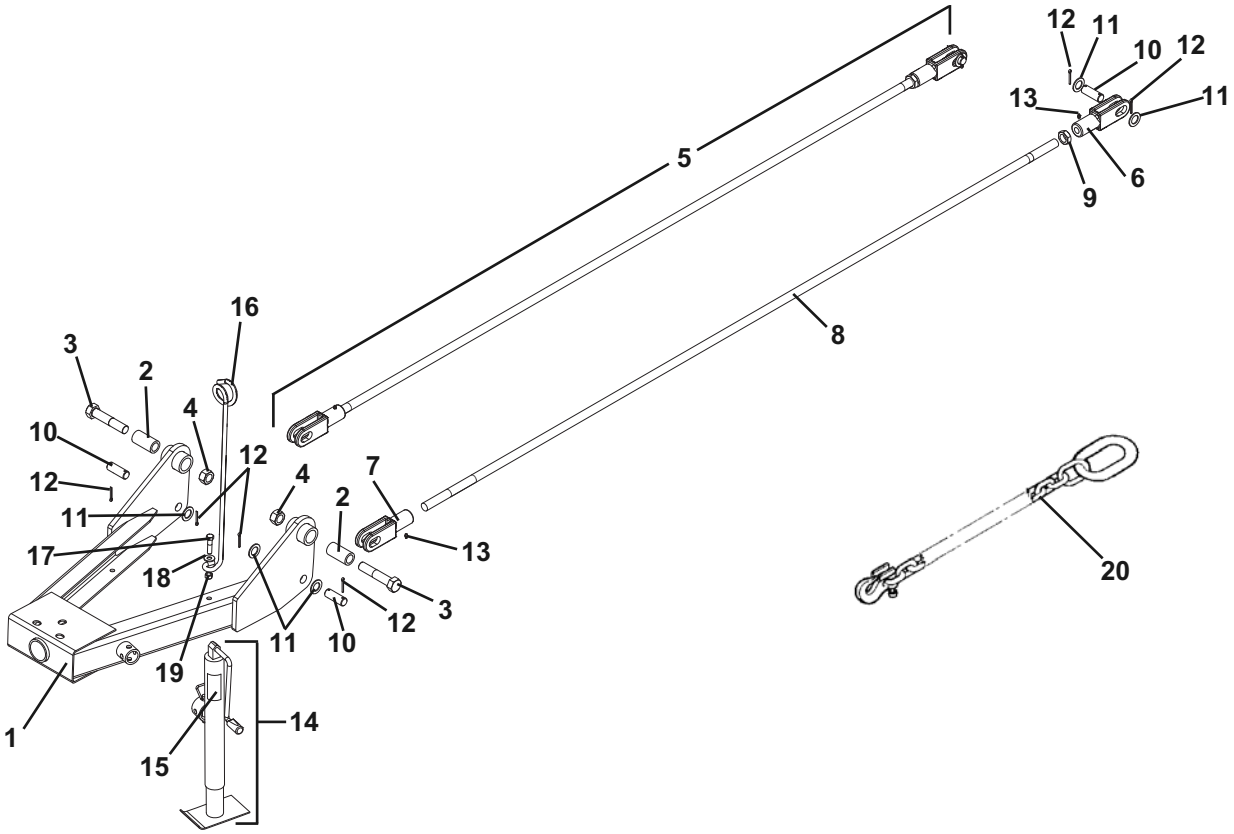

REF. NO.	PART NO.	DESCRIPTION	QTY.
1	50071405	Weldment, Tongue	1
2	50072801	Pivot Bushing, Tongue	2
3	19061	Capscrew, 1” x 5” Gr. 5	2
4	9163200	Locknut, 1” Gr. C	2
5	50071975	Levelving Rod Assy	2
6	50047714	Clevis Assy, RH	1
7	92309	Clevis Assy, LH	1
8	50071976	Leveling Rod	1
9	15612	Jam Nut	1
10	50073398	Pin, Swivel Link	2
11	20376	Flatwasher, 1” SAE	4
12	21020614	Cotter Pin, 3/16” x 1-1/2”	4
13	449BH	Grease Fitting	2
14	50080009	Jackstand Assy	1
15	D884	Decal, Warning - Jack Cap.	1
16	12031	Rod, Hose Holder	1
17	20110BH	Capscrew, 1/2” x 2” Gr. 5	1
18	15916	Flatwasher, 1/2”	1
19	15554	Locknut, 1/2”	1
20	91074	Safety Tow Chain	1

© 2016 Alamo Group Inc.

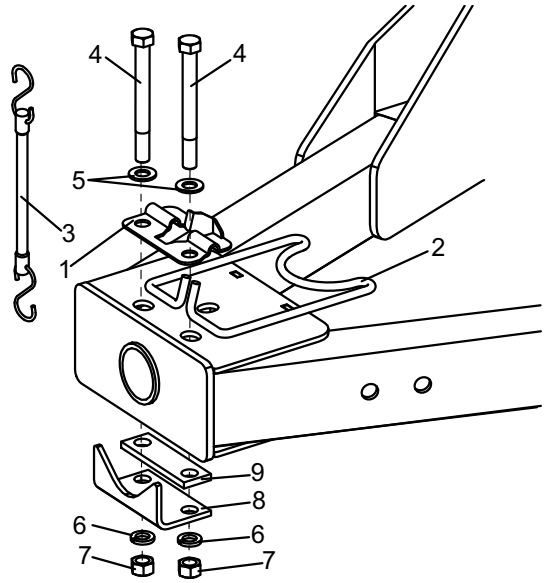

DRIVELINE HOLDER ASSEMBLY
2215R1,2215RR1 (540 RPM Models)
12215R1, 12215RR1 (1000 RPM Models)

REF. NO.	PART NO.	DESCRIPTION	QTY.
1	50054710	Mounting Bracket Weld.	1
2	50054711	Formed Driveline Holder	1
3	50060002	Tie-Down Strap	1
4	20923	Capscrew, 5/8” x 6”	2
5	20748	Flatwasher, 5/8” SAE	2
6	19486	Lockwasher, 5/8”	2
7	15563	Hex Nut, 5/8”	2
8	50081372	Formed Stop	1
9	50081373	Pad	1
10	-------	Instruction Sheet (50080870)	1

SWIVEL PIVOT HITCH
2215R1,2215RR1 (540 RPM Models)
12215R1, 12215RR1 (1000 RPM Models)

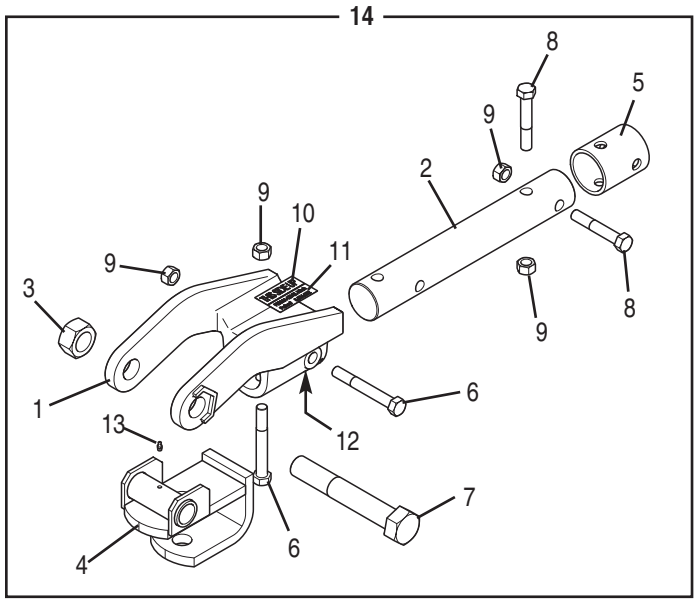

REF. NO.	PART NO.	QTY.	DESCRIPTION
1	50074196	1	Hitch w/Decals
2	50074187	1	Shaft
3	15521	1	Locknut, 1-1/4” Gr. C
4	50080681	1	Clevis Assembly
5	86356	1	Collar
6	------	2	Capscrew, 5/8” x 4-3/4” Gr. 5
7	45324	1	Capscrew, 1-1/4” x 8” Gr. 5
8	44168BH	2	Capscrew, 5/8” x 3-3/4” Gr. 5
9	15598BH	4	Locknut, 5/8”
10	50035874	1	Decal, Direction
11	97692	1	Decal, Patent
12	50045639	1	Decal, Direction
13	150033	1	Grease Fitting
14	**50054505SP**	**1**	**Swivel Pivot Hitch Assy**

© 2016 Alamo Group Inc.

EZ MOUNT - CV DRIVELINE PARKING STAND

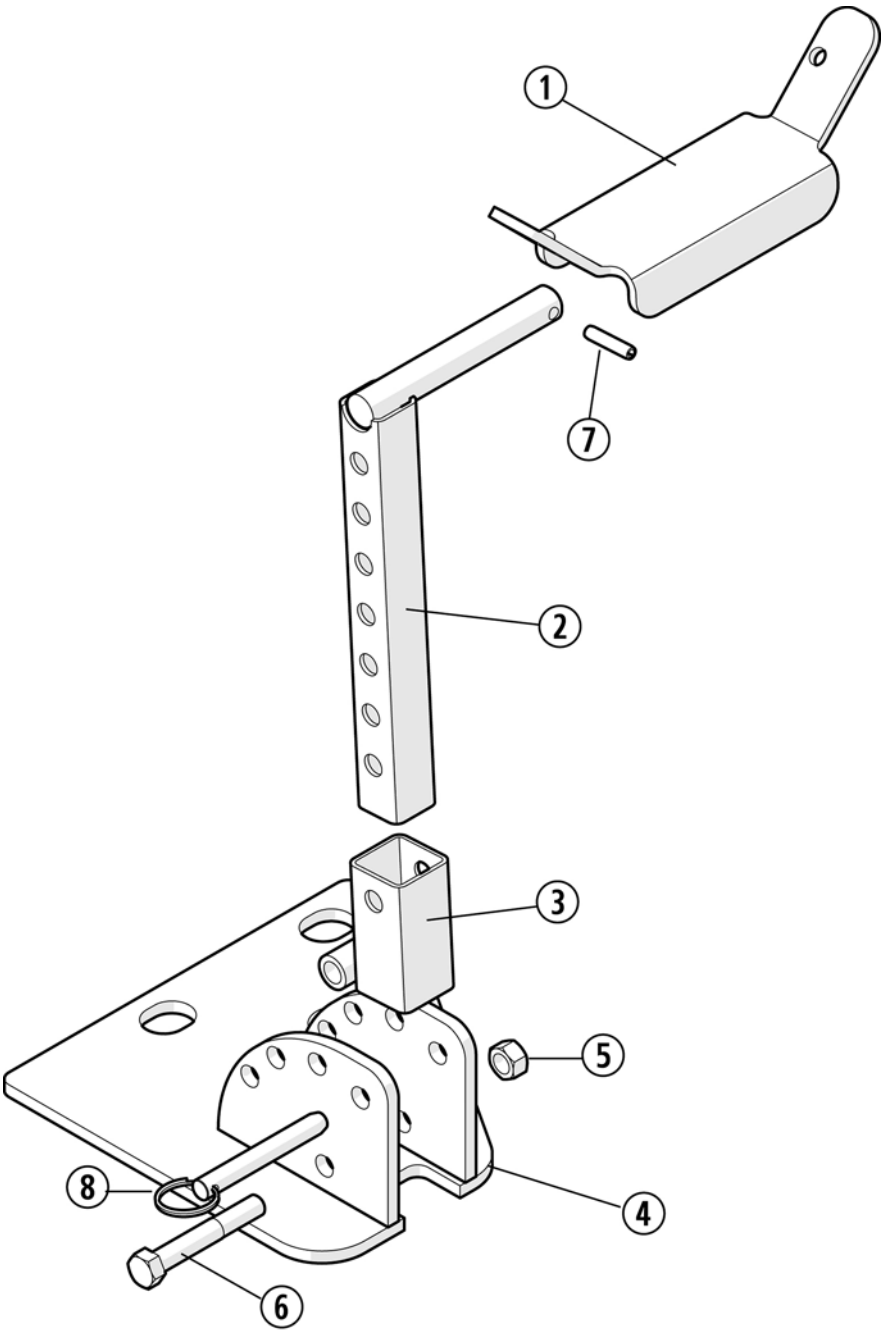

REF. NO.	PART NO.	DESCRIPTION	QTY.
	50077430	EZ Mount Driveline Holder Assy.	1
1	50077435	Saddle Weldment	1
2	50077434	Adjustment Tube Weldment	1
3	50077433	Pivot Mount	1
4	50077634	Base Weldment w/Decal	1
5	20360	Locknut 3/8”	1
6	20224	Bolt 3/8” x 2-1/2” Gr.5	1
7	44533	Roll Pin 7/32” x 1”	1
8	50077436	Quick Pin	1

© 2016 Alamo Group Inc.

CENTER AXLE & RELATED PARTS
2215R1,2215RR1 (540 RPM Models)
12215R1, 12215RR1 (1000 RPM Models)

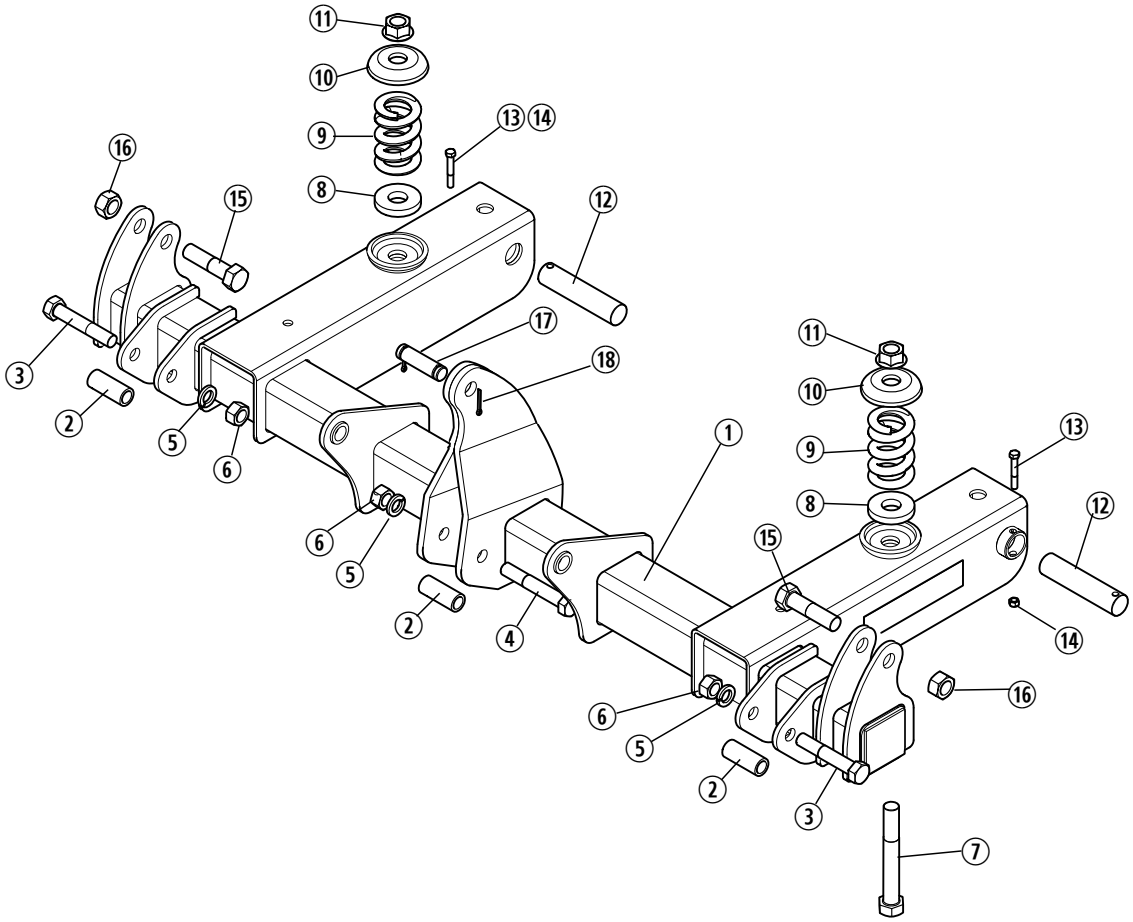

REF. NO.	PART NO.	DESCRIPTION	QTY.
1	50077223	Axle Weldment	1
2	50073257	Axle Bushing	1
3	1162850	Capscrew 7/8” x 5” Gr.5	2
4	20272BH	Capscrew 7/8” x 5-1/2” Gr.5	1
5	15824	Lockwasher 7/8”	3
6	19503	Hex Nut 7/8”	3
7	20860	Capscrew 1” x 7-1/2” Gr.5	2
8	91261	Cushion, Rubber	2
9	50070462	Spring	2
10	91152	Cup, Spring	2
11	44524BH	Locknut, Flanged 1”	2
12	50073267	Axle Pin	2
13	20224	Capscrew 3/8” X 2-1/2”	2
14	20363	Locknut 3/8”	2
15	19087	Capscrew 1” x4” Gr.5	2
16	9163200	Locknut 1”	2
17	95425	Cylinder Pin 1”	1
18	21020614	Cotter Pin 3/16” x 1-1/2”	2

© 2016 Alamo Group Inc.

WING AXLES & RELATED PARTS
2215R1,2215RR1 (540 RPM Models)
12215R1, 12215RR1 (1000 RPM Models)

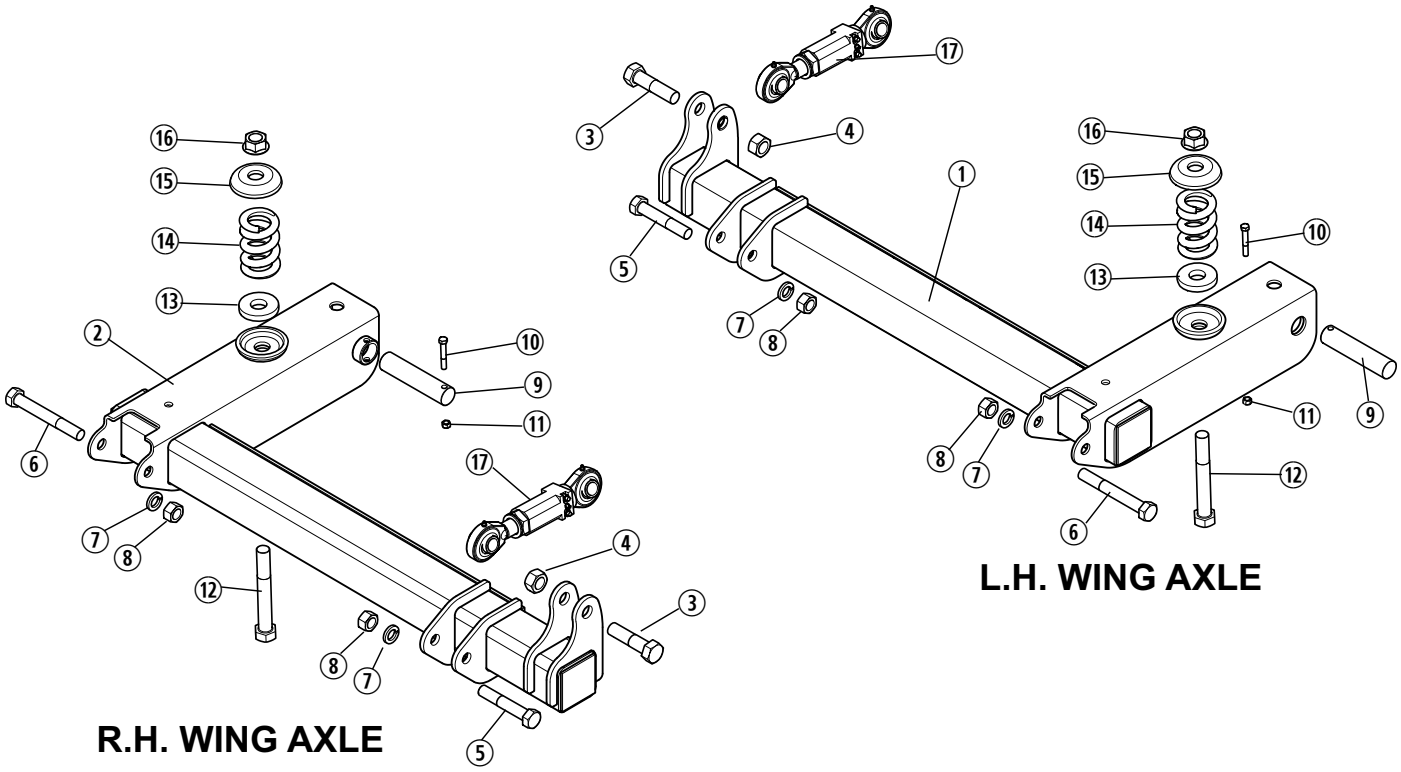

REF. NO.	PART NO.	DESCRIPTION	QTY.	NOTES:
1	50077225	L.H. Wing Axle Weldment	1	
2	50077224	R.H. Wing Axle Weldment	1	
3	19087	Capscrew 1” x 4” Gr.5	1	Per Axle
4	9163200	Lock Nut 1” Gr.C	1	Per Axle
5	1162850	Capscrew 7/8” x 5” Gr.5	1	Per Axle
6	20750	Capscrew 7/8” x6-3/4” Gr.5	1	Per Axle
7	15824	Lockwasher 7/8”	2	Per Axle
8	19503	Hex Nut 7/8”	2	Per Axle
9	50073267	Pin, Axle	1	Per Axle
10	20224	Capscrew 3/8” x 2-1/2”	1	Per Axle
11	20363	Lock Nut 3/8”	1	Per Axle
12	20860	Capscrew 1” x 7-1/2” Gr.5	1	Per Axle
13	91261	Cushion, Rubber	1	Per Axle
14	50070462	Spring	1	Per Axle
15	91152	Cup, Spring	1	Per Axle
16	44524BH	Lock Nut, Flanged 1”	1	Per Axle
17	50052742	Turnbuckle Assy. W/O Special Washer	1	See Turnbuckle & Related Parts

© 2016 Alamo Group Inc.

TURNBUCKLE & RELATED PARTS
2215R1,2215RR1 (540 RPM Models)
12215R1, 12215RR1 (1000 RPM Models)

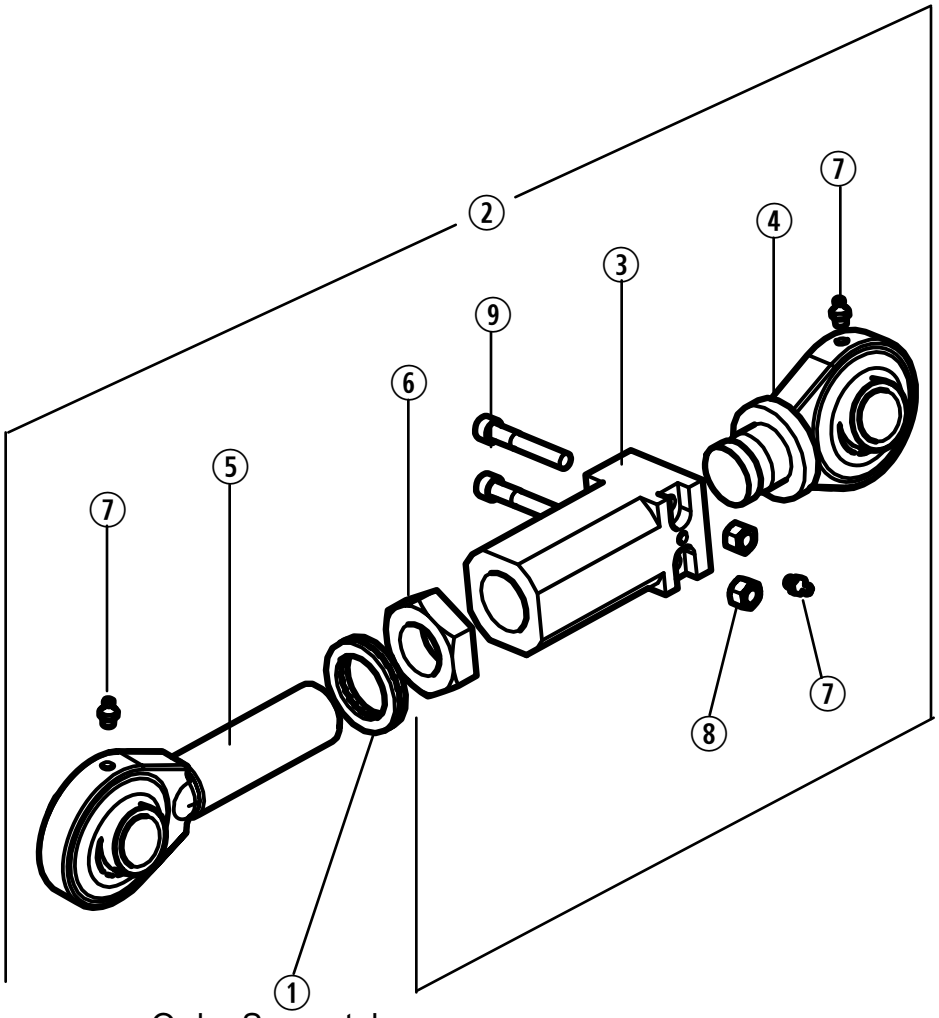

Order Separately
(Not Part of Assembly)

REF. NO.	PART NO.	DESCRIPTION	QTY.
1	50038405	Nord Washer (Special)	1
2	50052742	Turnbuckle Assy.	1
3	50052743	Body, Swivel	1
4	50052744	Rod Eye, Swivel	1
5	50052745	Rod Eye, Threaded	1
6	50052746	Jamnut 1-1/4”	1
7	449BH	Grease Fitting	3
8	45186	Lock Nut 5/16”	2
9	45185BH	Socket Hd. Capscrew 5/16” x 2”	2

© 2016 Alamo Group Inc.

AXLE ARMS & RELATED PARTS
SINGLE & DUAL SPINDLE
2215R1,2215RR1 (540 RPM Models)
12215R1, 12215RR1 (1000 RPM Models)

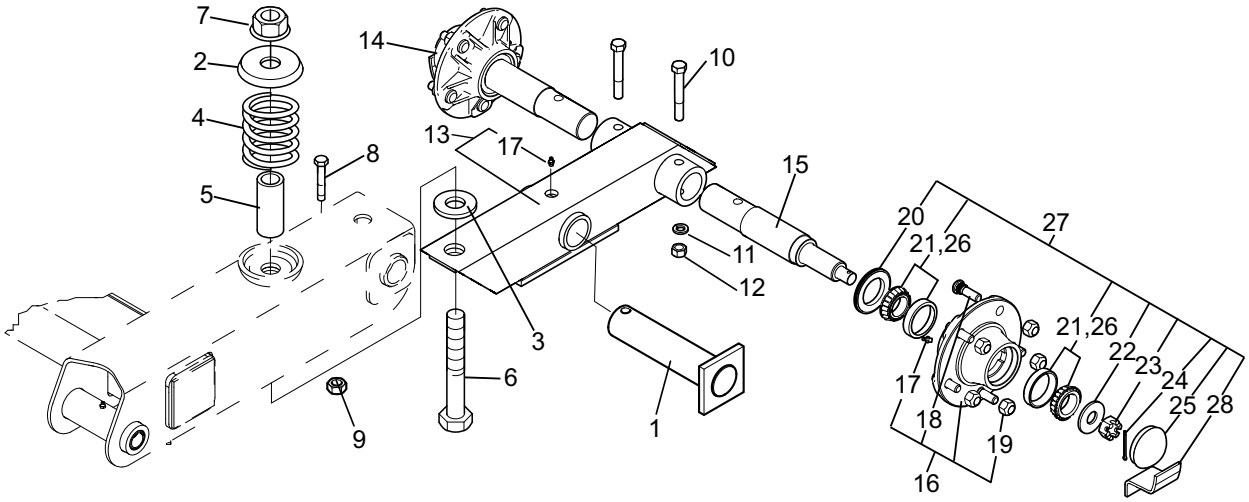

REF. NO.	PART NO.	DESCRIPTION	QTY.
	50074780	**Single Spindle Axle Arm L.H.**	**1**
	50074779	**Single Spindle Axle Arm R.H.**	**1**
	50074778	**Dual Axle Arm**	**2**
1	50054506	Pin Weldment	1
2	91152	Cup, Spring	1
3	91261	Cushion, Rubber	1
4	50070462	Spring, Coil	1
5	50070560	Spring Stop	1
6	20860	Capscrew, 1” x 7-1/2” Gr. 5	1
7	44524BH	Locknut, 1” Flanged	1
8	20224	Capscrew, 3/8” x 2-1/2” Gr. 5	1
9	20363	Locknut, 3/8”	1
10	20779	Capscrew, 1/2” x 3-1/2”” Gr. 5	1
11	15806	Lockwasher, 1/2”	1
12	15554	Locknut, 1/2”	1
13	50074777	Axle Tube Weldment w/Grease Fitting (New Style)	1
14	50073131	Single Spindle Axle and Hub Assy.	1
15	50073119	Spindle (New Style)	1
16	50035740	Hub Assy w/Cups, Lug Bolts, Nuts & Grease Fittings	1
17	449BH	Grease Fitting	2
18	15445	Lug Bolt	5
19	15515BH	Lug Nut	5
20	7967	Seal, Grease	1
21	50076BH	Bearing Cone	2
22	15920	Flatwasher, 3/4” SAE	1
23	120BH	Slotted Nut, 3/4” NF	1
24	15973	Cotter Pin	1
25	14-6-243	Hub Cap	1
26	14-6-197	Bearing Cup	2
27	50035756	Bearing Repair Kit	1
28	00779390	Retainer, Hub Cap	1

© 2016 Alamo Group Inc.

TANDEM AXLE ASSEMBLY (CURRENT STYLE)
2215R1,2215RR1 (540 RPM Models)
12215R1, 12215RR1 (1000 RPM Models)

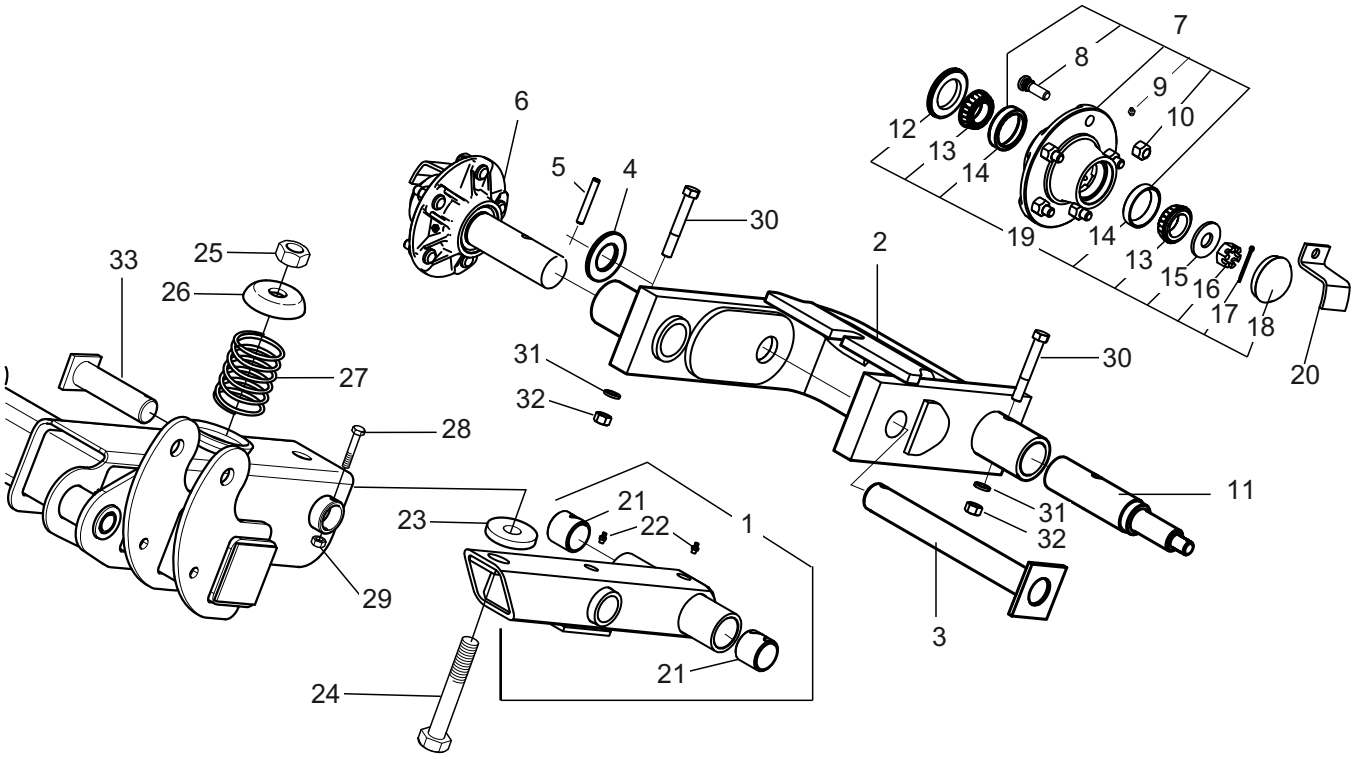

REF. NO.	PART NO.	DESCRIPTION	QTY.	REF. NO.	PART NO.	DESCRIPTION	QTY.
	50076584	**Tandem Axle Assy. LH**	**1**	16	120BH	Nut, Slotted 3/4” NF	1
	50076585	**Tandem Axle Assy. RH**	**1**	17	296	Cotter Pin 1/8” x 1-1/2”	1
1	50076572	Axle Tube Assy.	1	18	14-6-243	Hub Cap	1
2	50076574	Spindle Frame LH	1	19	50035756	Bearing Repair Kit	1
	50076575	Spindle Frame RH	1	20	00779390	Hub Cap Retainer	1
3	50076566	Pin Weldment	1	21	50028543	Spring Bushing	2
4	15924	Flatwasher 1-1/2” SAE	1	22	449BH	Grease Fitting	2
5	53065	Spirol Pin 3/8” x 2-1/2”	1	23	91261	Rubber Cushion	1
6	50073145	Spindle and Hub Assy.	2	24	20860	Capscrew 1” x 7-1/2” Gr.5	1
7	50035740	Hub Assembly	1	25	44524BH	Locknut 1” Flanged	1
8	15445	Lug Bolt	5	26	91152	Spring Cup	1
9	449BH	Grease Fitting	1	27	50035301	Spring	1
10	15515BH	Lug Nut	5	28	20224	Capscrew 3/8” x 2-1/2” Gr.5	1
11	50041170	Spindle	1	29	20363	Locknut 3/8”	1
12	7967	Seal, Triple Lip	1	30	20779	Capscrew 1/2” x 3-1/2” Gr.5	2
13	50076BH	Bearing Cone	2	31	15806	Lockwasher 1/2”	2
14	14-6-197	Bearing Cup	2	32	15554	Locknut 1/2”	2
15	15920	Flatwasher 3/4” SAE	1	33	50054506	Pin Weldment	1

© 2016 Alamo Group Inc.

WHEEL AND TIRE ASSEMBLIES
2215R1,2215RR1 (540 RPM Models)
12215R1, 12215RR1 (1000 RPM Models)

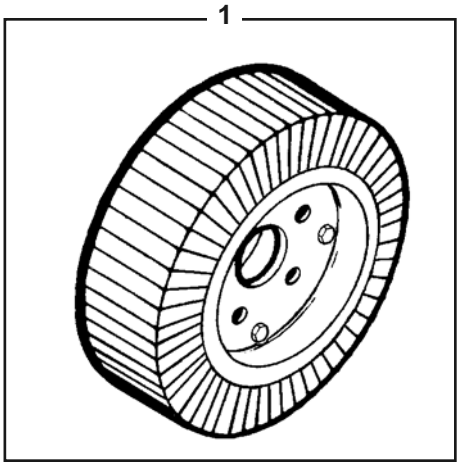

294SP SOLID TIRE ASSEMBLY

REF. NO.	PART NO.	DESCRIPTION	QTY.
1	294SP	Solid Tire Assembly	1

50075401SP SEGMENTED TIRE ASSY.
25” Diameter

REF. NO.	PART NO.	DESCRIPTION	QTY.
1	50075401SP	Segmented Tire Assembly	1

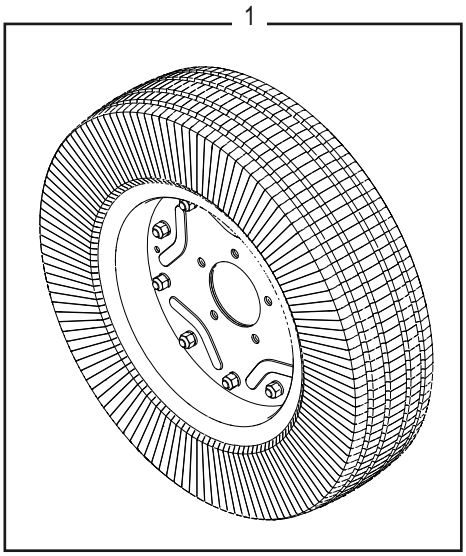

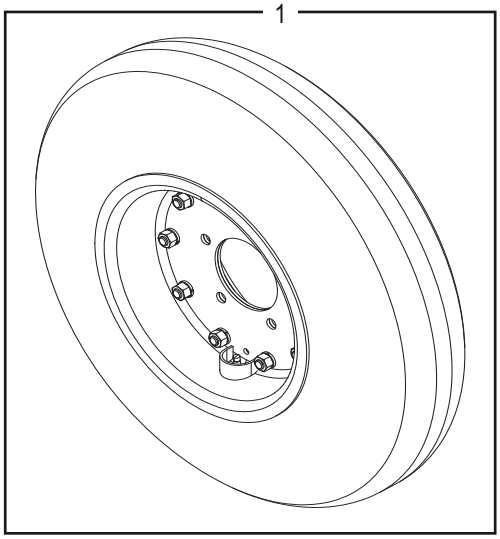

50072403SP AIR FILLED AIRPLANE TIRE ASSY.
24Ply 27.75” x 8.75”- 14.5”

REF. NO.	PART NO.	DESCRIPTION	QTY.
1	50072403SP	Air Filled Tire Assembly 27.75” x 8.75” -14.5”	1

© 2016 Alamo Group Inc.

WHEEL AND TIRE ASSEMBLIES
2215R1,2215RR1 (540 RPM Models)
12215R1, 12215RR1 (1000 RPM Models)

50050727SP AIRPLANE TIRE ASSEMBLY

REF. NO.	PART NO.	DESCRIPTION	QTY.
1	50051233BH	Tire 29 x 9.0 - 15/16 Ply	1
2	50051234	Tube 9 x 15	1
3	50073233	Wheel Flange Set	1
4	20054	Capscrew, 1/2” x 1” Gr. 5	10
5	15804	Lockwasher, 1/2”	10
6	15508	Hex Nut, 1/2”	10
7	**50050727SP**	**Tire Assembly**	**1**

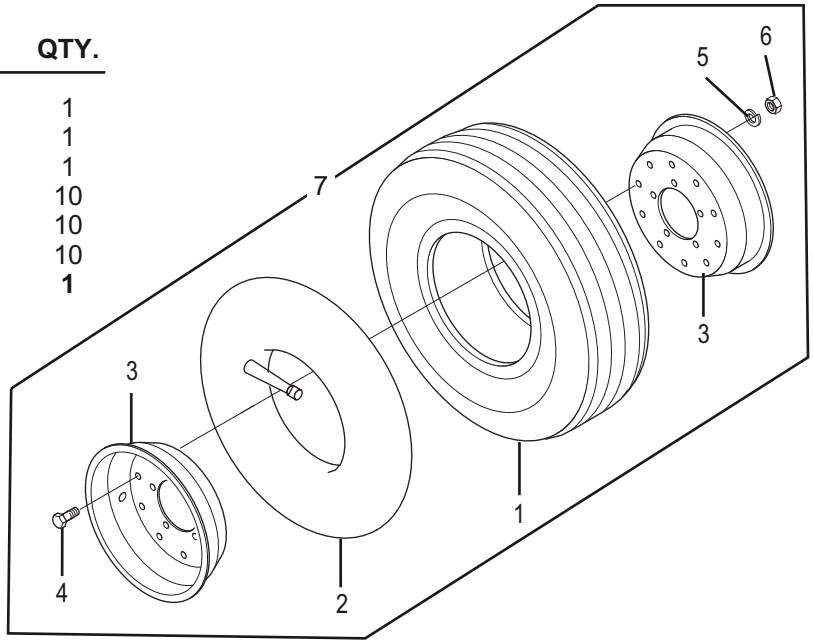

50077775SP FOAM FILLED AIRPLANE TIRE ASSY.
25” x 7”- 18”

REF. NO.	PART NO.	DESCRIPTION	QTY.
1	50077775SP	Foam Filled Tire Assembly 25” x 7”- 18”	1

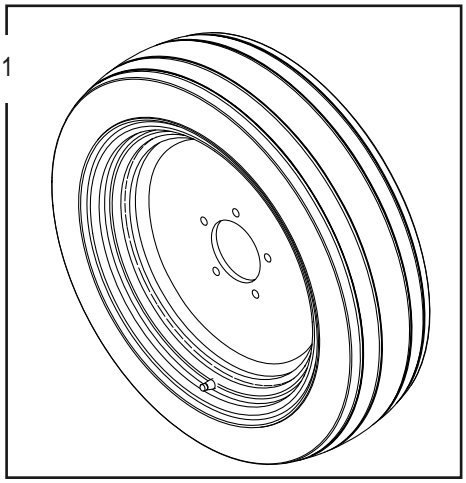

50068834SP FOAM FILLED AIRPLANE TIRE ASSY.
26” x 6.6”- 14”

REF. NO.	PART NO.	DESCRIPTION	QTY.
1	50068834SP	Foam Filled Tire Assembly 26” x 6.6”- 14”	1

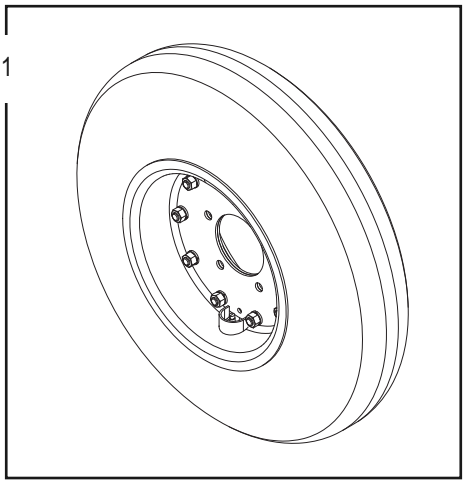

© 2016 Alamo Group Inc.

BAFFLE KIT (OPTIONAL)
2215R1,2215RR1 (540 RPM Models)
12215R1, 12215RR1 (1000 RPM Models)

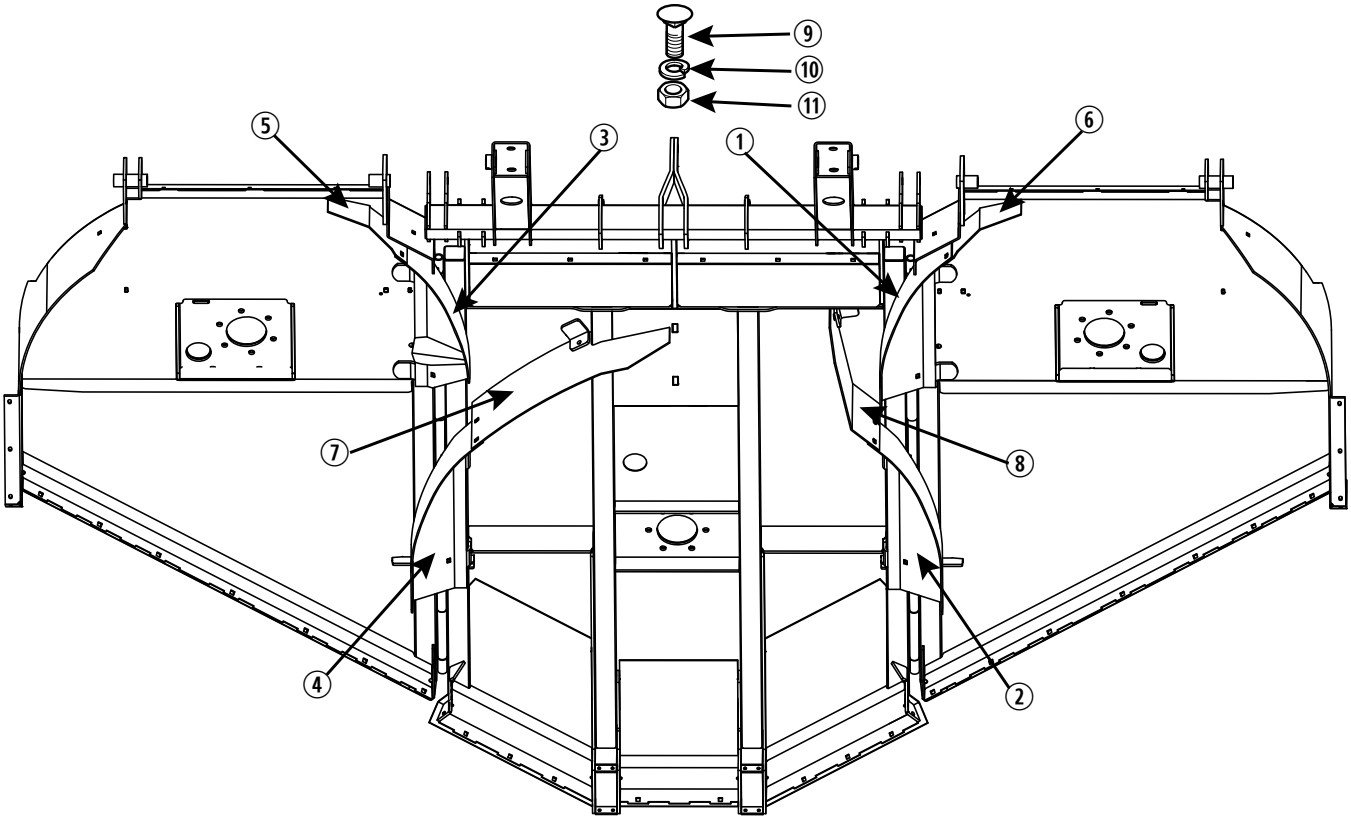

REF. NO.	PART NO.	DESCRIPTION	QTY.
1	50070219	Baffle, RH Wing	1
2	50070222	Baffle, RH Center	1
3	50070223	Baffle, LH Wing	1
4	50070224	Baffle, LH Center	1
5	50070228	Baffle, LH Wing Extension	1
6	50070232	Baffle, RH Wing Extension	1
7	50077266	Baffle, LH Center Extension	1
8	50077268	Baffle, RH Center Extension	1
9	5161614	Carriage Bolt 1/2” x 1-1/2” Gr.5	19
10	15806	Lockwasher 1/2”	19
11	8151600	Hex Nut 1/2”	19

© 2016 Alamo Group Inc.

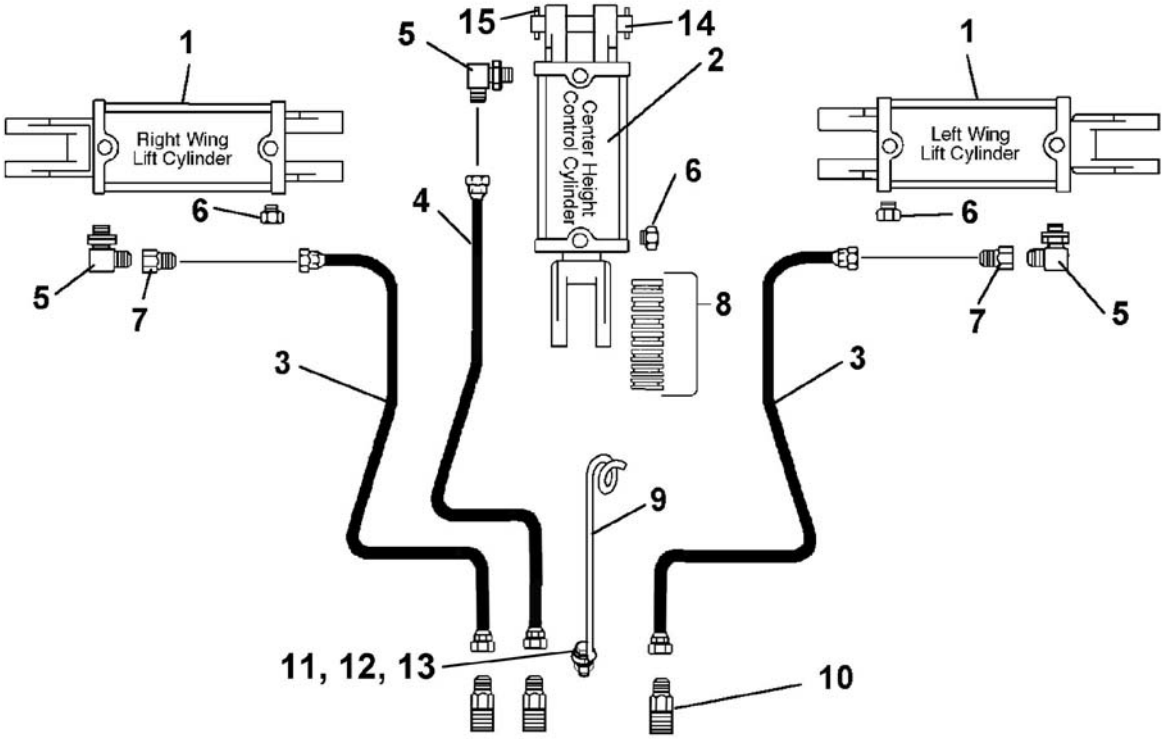

HYDRAULICS

2215R1,2215RR1 (540 RPM Models)

12215R1, 12215RR1 (1000 RPM Models)

WHEN PLUMBING TO TRACTOR REMOTES

REF. NO.	PART NO.	DESCRIPTION	QTY.
1	99564	Wing Lift Cylinder	2
2	99565	Axle Control Cylinder	1
3	62774	Hydraulic Hose Assy. 228"	2
4	50015063	Hydraulic Hose Assy. 196"	1
5	14-40-98	Elbow 90 degree	3
6	86500	Breather Plug	3
7	50068458	Restrictor, .078 Orifice	2
8	63451	Stop Kit	1
9	12031	Rod,Hose Holder	1
10	53340BH	Adaptor 9/16 JIC to 3/4 SAE	3
	24-6-434	Adaptor 9/16 JIC to 1/2 NPT	3
11	20110BH	Capscrew, 1/2” x 2” Gr. 5	1
12	15916	Flatwasher, 1/2”	1
13	15554	Locknut, 1/2”	1
14	95425	Pin, 1” Dia	1
15	21020614	Cotter Pin, 3/16” x 1-1/2”	2

© 2016 Alamo Group Inc.

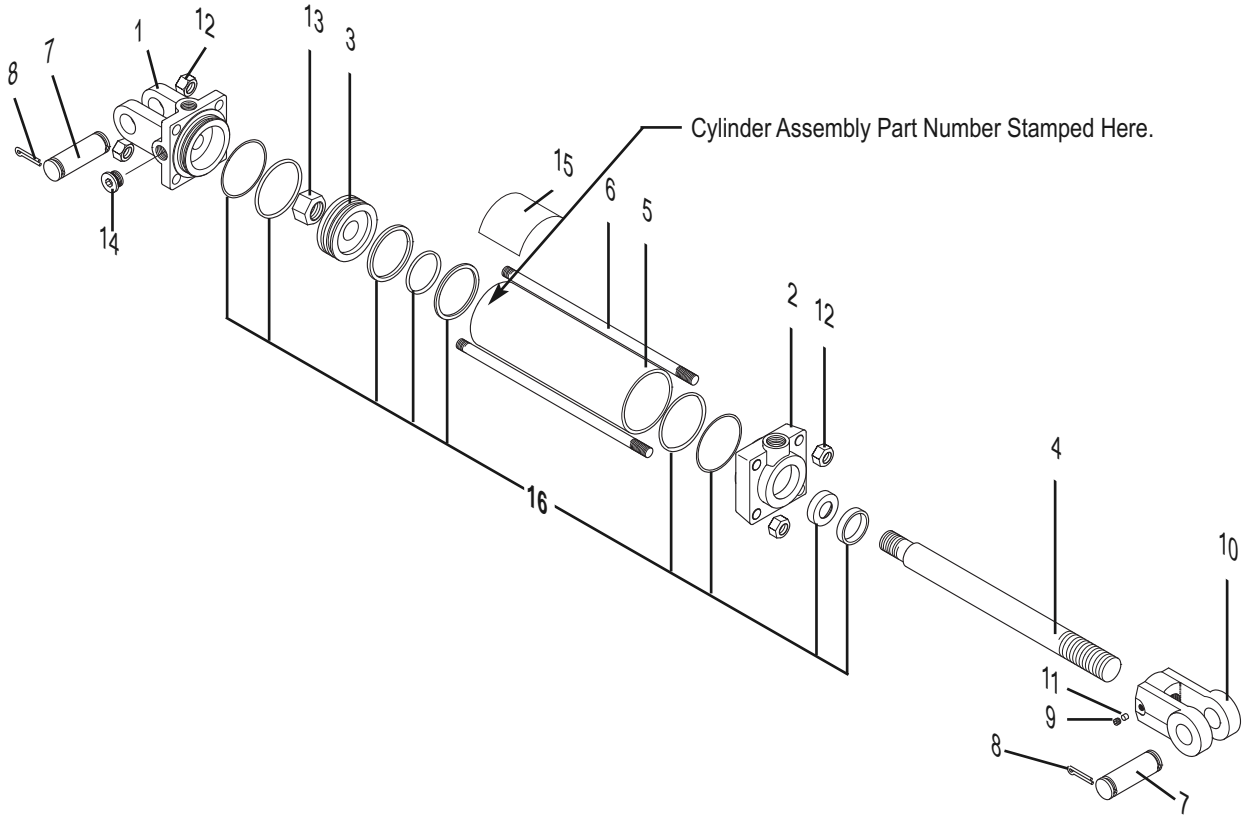

99565 AXLE HYDRAULIC CYLINDER
3.5” Bore x 8” Stroke 1.25 Rod Diameter
3/4” – 16 ORB Ports
Manufactured by Monarch

REF. NO.	PART NO.	DESCRIPTION	QTY.
	99565	**Hydraulic Cylinder Assembly**	**1**
1	95429	Clevis Cap	1
2	95430	Rod Cap	1
3	50017628	Piston	1
4	95431	Rod 1.25” Dia.	1
5	95426	Cylinder Tube	1
6	95427	Tie Rod	4
7	95425	Pin, 1” Dia.	2
8	21020614	Cotter Pin, 3/16” x 1-1/2”	4
9	95433	Thread Lock	1
10	95428	Rod Clevis, 1.25” x 1”	1
11	95422	Set Screw, 3/8” x 1/2 Knurled	1
12	95420	Hex Nut, 5/8” UNF	8
13	-------	Hex Nut, 1”-14	1
14	95435	Plug, 3/4”	1
15	50042072	Decal, Caution	1
16	**50017623**	**Seal Kit**	**1**

99564 WING HYDRAULIC CYLINDER
3” Bore x 12” Stroke 1.25” Rod Diameter
3/4” – 16 ORB Ports
Manufactured by Monarch

REF. NO.	PART NO.	DESCRIPTION	QTY.
	99564	**Hydraulic Cylinder Assembly**	**1**
1	95440	Clevis Cap	1
2	95439	Rod Cap	1
3	50017627	Piston	1
4	95436	Rod 1.25” Dia.	1
5	95437	Cylinder Tube	1
6	95438	Tie Rod	4
7	95425	Pin, 1” Dia.	2
8	21020614	Cotter Pin, 3/16” x 1-1/2”	4
9	95433	Thread Lock	1
10	95428	Rod Clevis, 1.25” x 1”	1
11	95422	Set Screw, 3/8” x 1/2 Knurled	1
12	8151600	Hex Nut, 1/2”-14 UNC	8
13	-------	Hex Nut, 1”-14	1
14	95435	Plug, 3/4”	1
15	50042072	Decal, Caution	1
16	**50017622**	**Seal Kit**	**1**

© 2016 Alamo Group Inc.

BUSH HOG®

2501 GRIFFIN AVE. • SELMA, AL 36703
WWW.BUSHHOG.COM