2715/2710
12715/12710

FLEX WING ROTARY MOWER

BUSH HOG®

Revised 03/19

PARTS MANUAL
SECTION 81

An Operator's Manual was shipped with the equipment. The Operator's Manual is an integral part of the safe operation of this machine and must be maintained with the unit at all times. **READ, UNDERSTAND, and FOLLOW** the Safety and Operation Instructions contained in this manual before operating the equipment. If the Operator's Manual is not with the equipment, contact your dealer or Bush Hog to obtain a copy before operating the equipment.

Safety Video

Important Operating and Safety Instructions are found in the Mower Safety Video that can be instantly accessed on the internet at: www.algqr.com/bve

www.algqr.com/bve

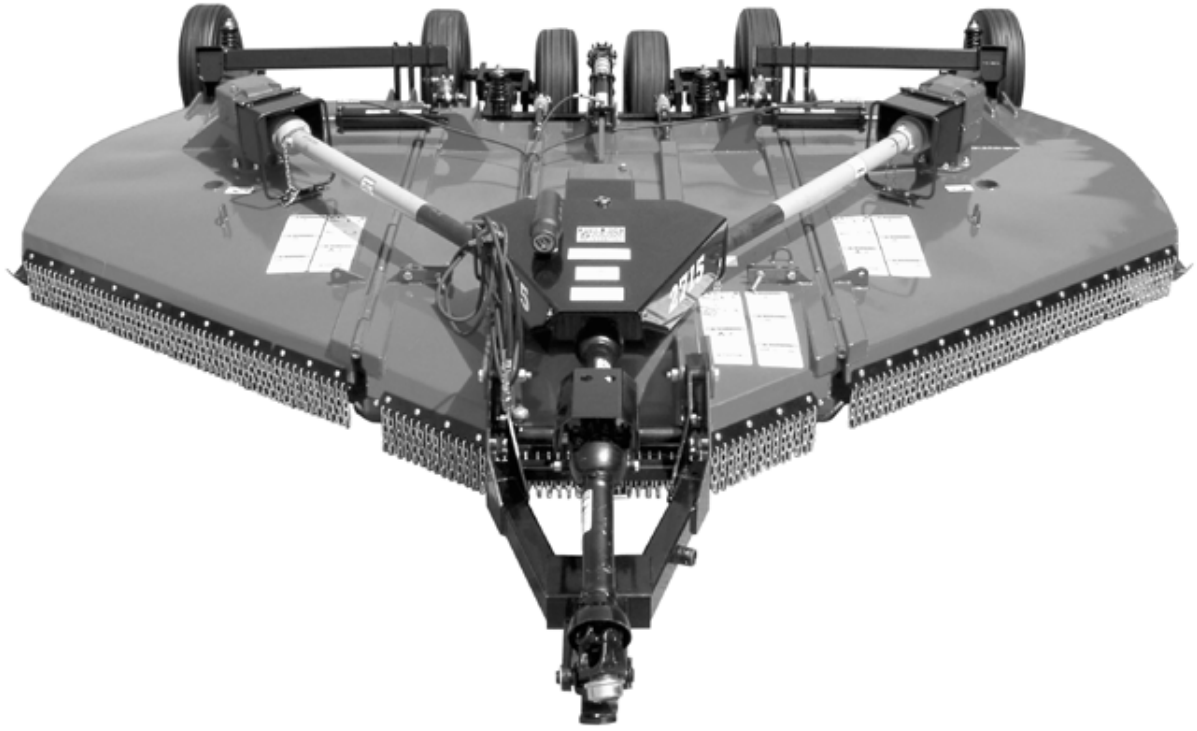

BUSH HOG®
2501 Griffin Ave.
Selma, AL 36703
Parts Ordering 1-800-304-2836
www.bushhog.com

ATTENCIÓN! LEA EL INSTRUCTIVO

Si No Lee Ingles, Pida Ayuda a Alguien Que Si Lo Lea Para Que le Traduzca las Medidas de Sequridad.

MEMBER OF THE ALAMO GROUP
ALWAYS ON THE CUTTING EDGE®

© 2012 Alamo Group Inc.

PARTS ORDERING GUIDE

The following instructions are offered to help eliminate needless delay and error in processing purchase orders for the equipment in this section.

1. The Parts Section is prepared in logical sequence and grouping of parts that belong to the basic machine featured in this manual. Part Numbers and Descriptions are given to help locate the parts and quantities required.

2. The Purchase Order must include the name and address of the person or organization ordering the parts, who should be charged, and if possible, the serial number of the machine for which the parts are ordered.

3. The Purchase Order must clearly list the quantity of each part, the complete and correct part number (be sure to include all periods), and the basic name of the part.

4. The Manufacturer reserves the right to substitute parts where applicable.

5. Some parts are unlisted items which are special production items not normally stocked and are subject to special handling. Request a quotation for such parts before sending a Purchase Order.

6. The Manufacturer reserves the right to change prices without prior notice.

For maximum safety and to guarantee optimum product reliability, always use genuine BUSH HOG Parts. The use of inferior replacement parts may causepremature or catastrophic failure which could result in serious injury or death.Direct any questions regarding parts to:

BUSH HOG
2501 Griffin Ave.
Selma, AL 36703
www.bushhog.com
Contact Us
800-304-2836

BUSH HOG®

To the Owner/Operator/Dealer

All implements with moving parts are potentially hazardous. There is no substitute for a cautious, safe-minded operator who recognizes the potential hazards and follows reasonable safety practices. The manufacturer has designed this implement to be used with all its safety equipment properly attached to minimize the chance of accidents.

BEFORE YOU START! Read the safety messages on the implement and shown in your manual. Observe the rules of safety and common sense!

WARRANTY INFORMATION:
Read and understand the complete Warranty Statement found in this Manual. Fill out the Warranty RegistrationForm in full and return it to within 30 Days. Make certain the Serial Number of the Machine is recorded on theWarranty Card and on the Warranty Form that you retain.

LIMITED WARRANTY

Bush Hog warrants to the original purchaser of any new Bush Hog equipment, purchased from an authorized Bush Hog dealer, that the equipment be free from defects in material and workmanship for a period of one (1) year for non-commercial, state and municipalities' use and ninety (90) days for commercial use from date of retail sale. The obligation of Bush Hog to the purchaser under this warranty is limited to the repair or replacement of defective parts.

Replacement or repair parts installed in the equipment covered by this limited warranty are warranted for ninety (90) days from the date of purchase of such part or to the expiration of the applicable new equipment warranty period, whichever occurs later. Warranted parts shall be provided at no cost to the user at an authorized Bush Hog dealer during regular working hours. Bush Hog reserves the right to inspect any equipment or parts which are claimed to have been defective in material or workmanship.

DISCLAIMER OF IMPLIED WARRANTIES & CONSEQUENTIAL DAMAGES

Bush Hog's obligation under this limited warranty, to the extent allowed by law, is in lieu of all warranties, implied or expressed, **INCLUDING IMPLIED WARRANTIES OF MERCHANTABILITY AND FITNESS FOR A PARTICULAR PURPOSE** and any liability for incidental and consequential damages with respect to the sale or use of the items warranted. Such incidental and consequential damages shall include but not be limited to: transportation charges other than normal freight charges; cost of installation other than cost approved by Bush Hog; duty; taxes; charges for normal service or adjustment; loss of crops or any other loss of income; rental of substitute equipment, expenses due to loss, damage, detention or delay in the delivery of equipment or parts resulting from acts beyond the control of Bush Hog.

THIS LIMITED WARRANTY SHALL NOT APPLY:

1. To vendor items which carry their own warranties, such as engines, tires, and tubes.
2. If the unit has been subjected to misapplication, abuse, misuse, negligence, fire or other accident.
3. If parts not made or supplied by Bush Hog have been used in connection with the unit, if, in the sole judgement of Bush Hog such use affects its performance, stability or reliability.
4. If the unit has been altered or repaired outside of an authorized Bush Hog dealership in a manner which, in the sole judgement of Bush Hog, affects its performance, stability or reliability.
5. To normal maintenance service and normal replacement items such as gearbox lubricant, hydraulic fluid, worn blades, or to normal deterioration of such things as belts and exterior finish due to use or exposure.
6. To expendable or wear items such as teeth, chains, sprockets, belts, springs and any other items that in the company's sole judgement is a wear item.

NO EMPLOYEE OR REPRESENTATIVE OF BUSH HOG IS AUTHORIZED TO CHANGE THIS LIMITED WARRANTY IN ANY WAY OR GRANT ANY OTHER WARRANTY UNLESS SUCH CHANGE IS MADE IN WRITING AND SIGNED BY BUSH HOG'S SERVICE MANAGER, 2501 GRIFFIN AVE., SELMA, ALABAMA 36703.

Record the model number, serial number and date purchased. This information will be helpful to your dealer if parts or service are required.

MODEL NUMBER _____

SERIAL NUMBER _____

DATE OF RETAIL SALE _____

MAKE CERTAIN THE WARRANTY
HAS BEEN FILED WITH BUSH HOG
SELMA, ALABAMA

2715, 2710, 12715, 12710
ROTARY CUTTER

ALPHABETICAL INDEX

CONTENTS **PAGE**

Axle, Center & Wing Units....81-5-6 through 81-5-8
Axle, Tandem....81-5-9
Baffle Kit....81-6-1
Base Assembly, Center....81-1-1
Base Assembly, R.H. Wing & L.H. Wing....81-1-2
Belting, Front & Rear....81-2-3
Blades & Blade Holders....See Base Assemblies
Chain, Safety Tow....81-5-2, 81-5-3
Chains, Highway Use....81-2-1 through 81-2-2
Cylinders, Hydraulic....81-7-4, 81-7-5
Decal Kits....81-8-1, See Base Assemblies
Driveline Holder Assembly....81-5-4
Driveshafts, Comer / EG....81-4-1 through 81-4-5, 81-4-15
Driveshafts, Bondioli & Pavesi....81-4-6 through 81-4-11
Driveshafts, Walterscheid....81-4-12, 81-4-13
Gearbox, Transfer (Mfg. by Comer)....81-3-1 & 81-3-6
Gearbox, Transfer (Mfg. by Bondioli & Pavesi)....81-3-2
Gearbox, Center....81-3-3
Gearbox, L.H. Wing....81-3-4
Gearbox, R.H. Wing....81-3-5
Hitch Assemblies....81-5-5
Hydraulic Fittings To Remote Valve....81-7-1
Hydraulic Fittings To Tractor Remotes....81-7-2
Jackstand....81-5-2, 81-5-3
Leveling Rod Assembly....81-5-1 through 81-5-3
Pillow Block Assembly....81-4-14
Shield, Wing Driveshafts....81-2-6
Shield, Center Folding (Old Style)....81-2-4
Shield, Center Folding (New Style)....81-2-5
Tire, Solid & Airplane....81-5-10, 81-5-11, 81-5-13
Tongue, Assembly....81-5-1 through 81-5-3
Weight Box Assembly, 2710 & 12710....81-1-3
Wheel, Auto Rim....81-5-10
Wing Lift (Manual)....81-5-12
Valve, Hydraulic (3 Spool)....81-7-3
Valve Bracket Kit....81-7-1

© 2012 Alamo Group Inc.

CENTER DECK ASSEMBLY
2715 & 2710 (540 RPM Models)
12715 & 12710 (1000 RPM Models)

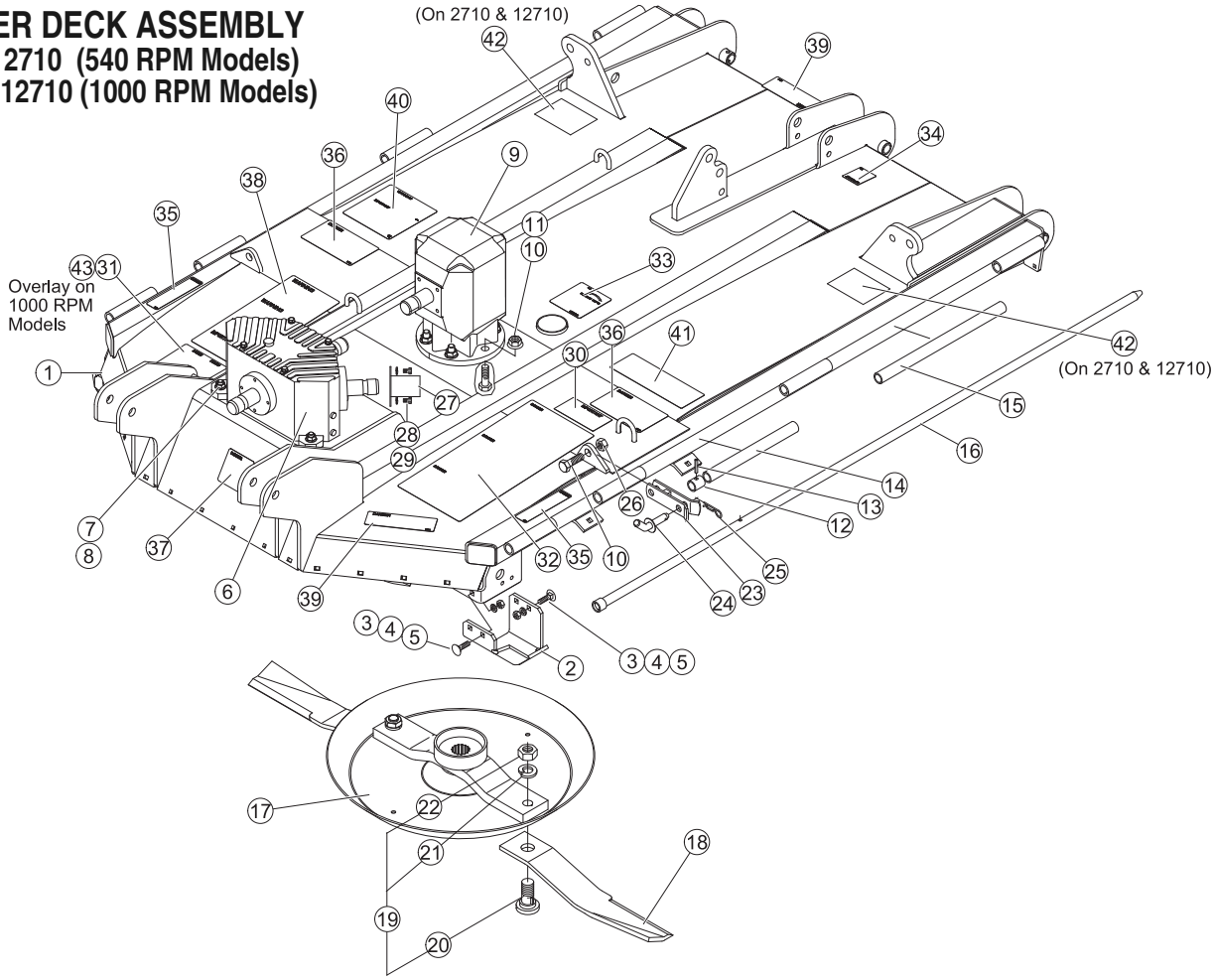

Ref. No.	Part No.	Description	Qty. Req'd.
1	50054337	Skid R.H.	1
2	50054334	Skid L.H.	1
3	----------	Carriage Bolt 1/2" x 1-1/2" Gr.5	8
4	---------	Lockwasher 1/2"	8
5	---------	Hex Nut 1/2"	8
6	71202	Transfer Gearbox (540 Mfd by Comer)	1
	71203	Transfer Gearbox (1000 Mfd by Comer)	1
	*50045696	Transfer Gearbox (540 Mfd by B&P)	1
	*Replaced By 71202 Gearbox Assy.		
	50045697	Transfer Gearbox (1000 Mfd by B&P)	1
7	--------	Capscrew 5/8" x 2" Gr.5	4
8	--------	Locknut 5/8" Flanged	4
9	71485	Gearbox (540 RPM)	1
	70995	Gearbox (1000 RPM)	1
10	---------	Capscrew 3/4" x 2-1/2" Gr.5	8
11	---------	Locknut, Flanged, 3/4"	6
12	91900BH	Lock Collar	2
13	--------	Roll Pin 3/8" x 1-1/2"	2
14	50054464	Front Cover	2
15	50054465	Rear Cover	2
16	50054445	Hinge Rod	2
17	50057117	Pan Weldment	1
18	50054545	Blade, Parallel Uplift	2
	50053084	Blade, Uplift	2

Ref. No.	Part No.	Description	Qty. Req'd.
19	63607	Blade Bolt Kit	2
20	7919BH	Blade Bolt	2
21	20322	Lockwasher 1-1/8"	2
22	252BH	Jamb Nut 1-1/8"	2
23	50028476	Wing Latch	2
24	84672	Pin	2
25	1273BH	Presto Pin	2
26	--------	Locknut 3/4"	2
27	50028363	Shaft Cover (2710, 12710)	1
28	--------	Capscrew M8 x 1.25 x 20	2
29	--------	Lockwasher M8	2
30	91443	Decal, Important	1
31	D547	Decal, Danger	1
32	D550	Decal, Sheet	1
33	D551	Decal, Blade Rotation CCW	1
34	D544	Decal, Important	1
35	D555	Decal, Danger	2
36	D565	Decal, Danger	2
37	D546	Decal, Danger	1
38	D553	Decal, Warning	1
39	D614	Decal, Danger Thrown Obj.	2
40	D559	Decal, Bush Hog Parts	1
41	D587	Decal, Lubrication	1
42	D575	Decal, Danger (Crushing Hazard)	2
43	D548	Decal, Warning (1000 RPM Only)	1

© 2012 Alamo Group Inc.

WING DECK ASSEMBLIES
2715 & 2710 540 RPM Models
12715 & 12710 1000 RPM Models

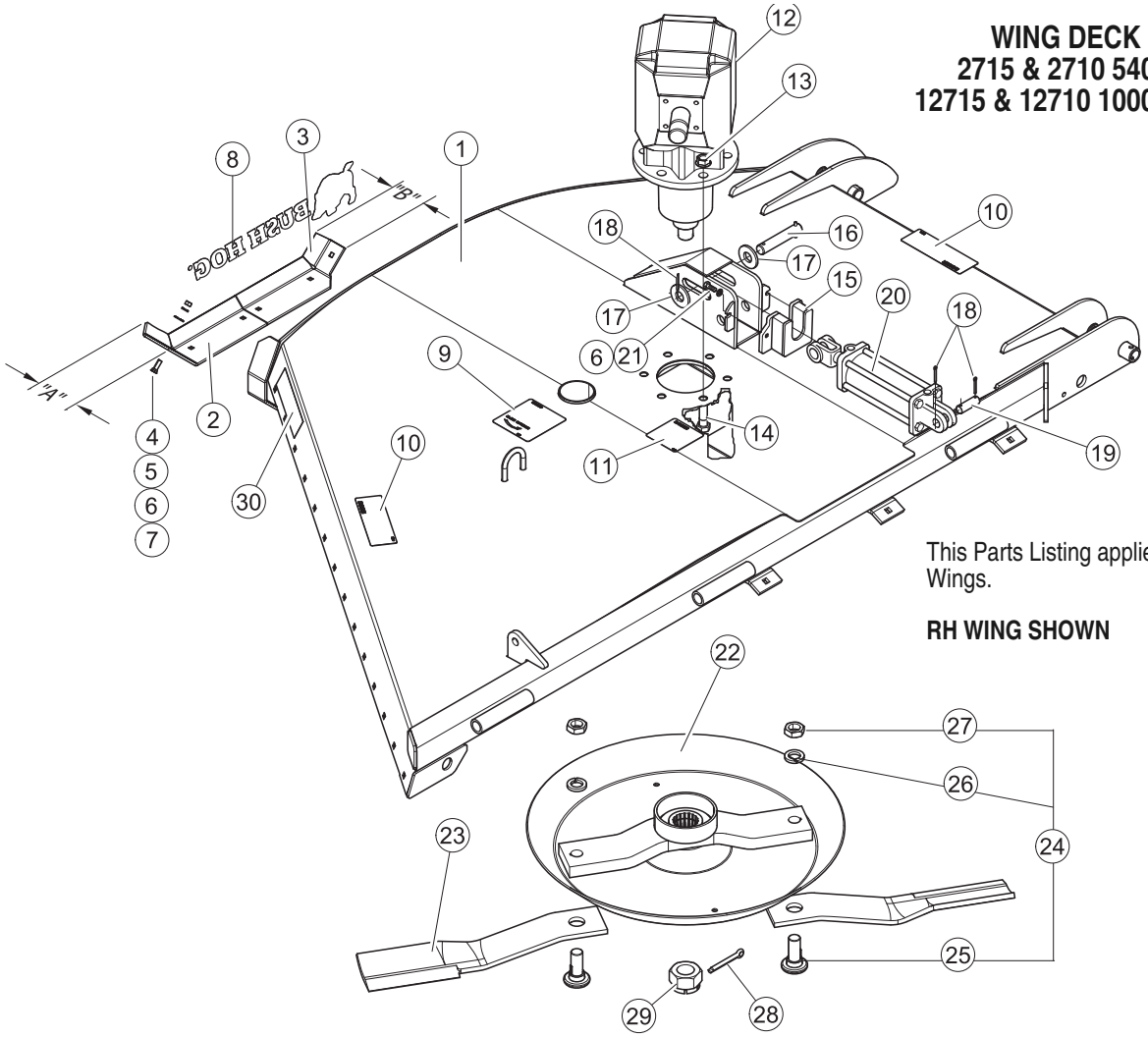

This Parts Listing applies to RH and LH Wings.

RH WING SHOWN

Ref. No.	Part No.	Description	Qty. Req'd.
1	50067540	R.H. Wing Frame w/Decals	1
	50067542	R.H. Wing Frame w/Decals & Rings	1
	50067544	L.H. Wing Frame w/Decals	1
	50067546	L.H. Wing Frame w/Decals & Rings	1
2	50067548	Skid R.H. Front "A" = 4.5" (Current)	1
	50054451	Skid R.H. Front "A" = 5.2" (Early Models)	1
	50067549	Skid L.H. Front "A" = 4.5" (Current)	1
	50054453	Skid L.H. Front "A" = 5.2" (Early Models)	1
3	50067551	Skid R.H. Rear "B" = 3.12" (Current)	1
	50054452	Skid R.H. Rear "B" = 3.82" (Early Models)	1
	50067552	Skid L.H. Rear "B" = 3.12" (Current)	1
	50054454	Skid L.H. Rear "B" = 3.82" (Early Models)	1
4	3161212	Plow Bolt 3/8" x 1-1/4"	6
5	----------	Flatwasher 3/8"	6
6	----------	Lockwasher 3/8"	6
7	----------	Hex Nut 3/8"	6
8	50061049	Bush Hog Decal	1
9	D551	Blade Rotation Decal CCW RH Wing	1
	D552	Blade Rotation Decal CW LH Wing	1
10	D614	Thrown Obj. Decal	2
11	D546	Danger Decal	1
12	71488	Gearbox R.H. 540 RPM	1
	71486	Gearbox L.H. 540 RPM	1
	71490	Gearbox R.H. 1000 RPM	1
	71489	Gearbox R.H. 1000 RPM	1

Ref. No.	Part No.	Description	Qty. Req'd.
13	20299	Locknut - Flanged 3/4"	6
14	----------	Capscrew 3/4" x 2-1/2" Gr.5	6
15	50031959	Push Over Assy	1
16	87293	Cylinder Pin	1
17	20376	Flatwasher 1"	2
18	----------	Cotter Pin 3/16" x 2"	3
19	95425	Pin	1
20	99564	Wing Lift Cylinder (Monarch)	1
	50047474	Wing Lift Cylinder (Bailey)	1
21	----------	Capscrew 3/8" x 1"	2
22	50057117	Pan Weldment	1
23	50054545	Blade (CCW for R.H. Wing)	2
	50053084	Blade - Uplift (CCW for R.H. Wing)	2
	50054546	Blade (CW for L.H. Wing)	2
	50053083	Blade - Uplift (CW for L.H. Wing)	2
24	63607	Blade Bolt Kit	2
25	7919BH	Blade Bolt	2
26	20322	Lockwasher 1-1/8	2
27	252BH	Jamb Nut	2
28	70419	Cotter Pin	1
29	70418	Castle Nut (Blade Pan)	1
30	50031212	Amber Reflector	1

© 2012 Alamo Group Inc.

WEIGHT BOX ASSEMBLY

2710 & 12710 Models

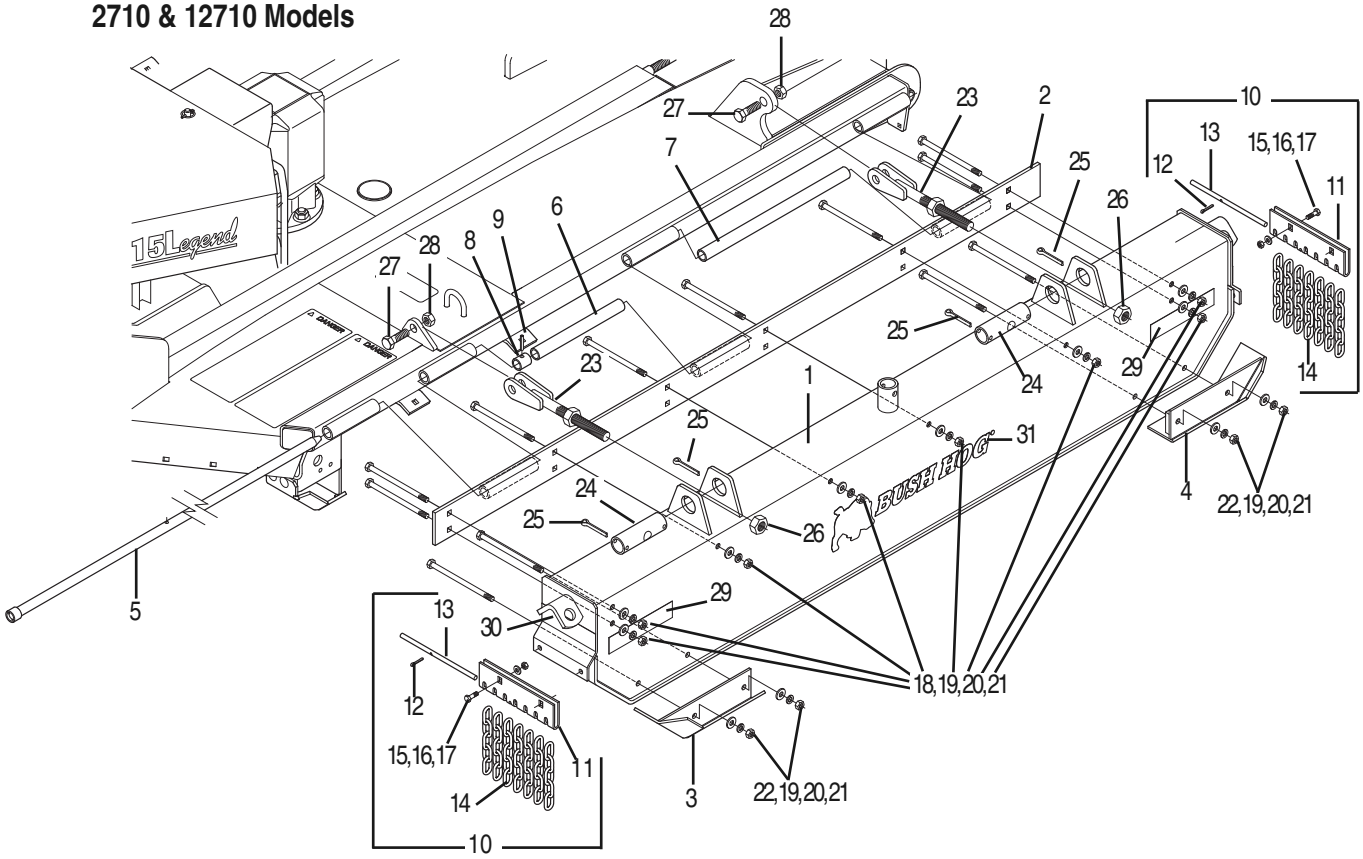

Ref. No.	Part No.	Description	Qty. Req'd.
1	50054654	Weight Box Assembly (Items 29-31)	1
2	50054653	Hinge Weldment	1
3	50054783	Skid Weldment L.H.	1
4	50054786	Skid Weldment R.H.	1
5	50054445	Hinge Rod	2
6	50054464	Front Cover	2
7	50054465	Rear Cover	2
8	91900BH	Lock Collar	2
9	--------	Roll Pin 3/8" X 1-1/2"	2
10	50054657	Chain Assembly (Items 11-14)	2
11	50054667	Chain Support	2
12	-------	Cotter Pin 5/32" x 1 ZP	2
13	50054668	Pin	2
14	50054588	Chain, 5 Link	7
15	-------	Capscrew 3/8" x 1-1/4" Gr.5	4
16	-------	Flatwasher 3/8"	4
17	-------	Hex Nut 3/8"	4
18	20228BH	Capscrew 1/2" x 8" Gr.5	8
19	-------	Flatwasher 1/2"	12
20	-------	Lockwasher 1/2"	12
21	-------	Hex Nut 1/2"	12
22	44193BH	Capscrew 1/2" x 8-1/2" Gr.5	4
23	50054656	Connector	2
24	50054669	Pivot Tube	2
25	-------	Cotter Pin	4
26	19502	Hex Nut 1"	4
27	-------	Capscrew 7/8" x 3" Gr.5	2
28	44149BH	Locknut 7/8"	2
29	50031212	Amber Reflector 2 x 9	4
30	50031214	Red Reflector 2 x 9	2
31	50061049	Bush Hog Decal	2

© 2012 Alamo Group Inc.

FRONT AND REAR SINGLE ROW HIGHWAY CHAINS

2715 & 2710 (540 RPM Models)
12715 & 12710 (1000 RPM Models)

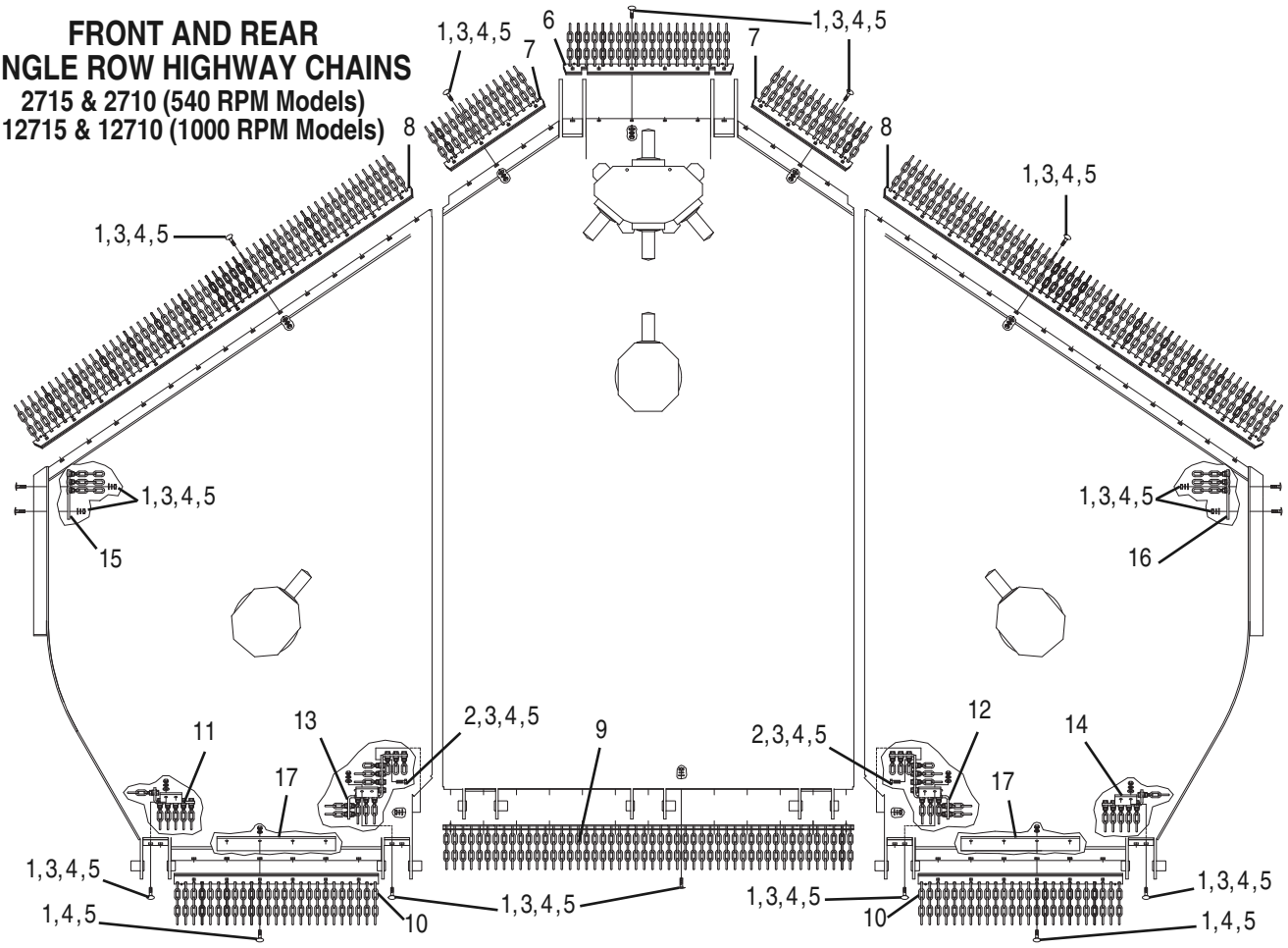

REF. NO.	PART NO.	QTY.	DESCRIPTION
1	44286	79	Carriage Bolt 3/8" x 1-1/2" Gr.5
2	——	6	Capscrew 3/8" x 1-1/4" Gr.5
3	——	73	Flatwasher 3/8"
4	——	85	Lockwasher 3/8"
5	——	85	Hex Nut 3/8"
6	**50054812**	**1**	**5/16" Front Center Chain Assy.**
	50054586	1	Front Center Support
	50054587	1	Chain Rod 25-3/4"
	50017264	20	Chain, Plated
	50017210	2	Roll Pin, 1/8" x 1-1/4"
7	**50054813**	**2**	**5/16" Front Outside Chain Assy.**
	50054579	1	Front Outside Support
	50054580	1	Chain Rod 17-3/4"
	50017264	14	Chain, Plated
	50017210	2	Roll Pin, 1/8" x 1-1/4"
8	**50054811**	**2**	**5/16" Front Wing Chain Assy.**
	50054577	1	Front Wing Support
	50054578	1	Chain Rod 69-1/8"
	50017264	55	Chain, Plated
	50017210	2	Roll Pin, 1/8" x 1-1/4"
9	**50068143**	**1**	**5/16" Rear Center Chain Assy.**
	50068142	1	Rear Center Support
	50054583	1	Chain Rod 62-3/8"
	50017264	50	Chain, Plated
	50017210	2	Roll Pin, 1/8" x 1-1/4"
10	**50054814**	**2**	**5/16" Rear Wing Chain Assy.**
	50054575	1	Rear Wing Support
	50054576	1	Chain Rod 31"
	50017264	25	Chain, Plated
	50017210	2	Roll Pin, 1/8" x 1-1/4"
11	**50054819**	**1**	**5/16" L.H. Outside Chain Assy.**
	50054581	1	L.H. Outside Chain Bracket
	50018912	6	Plated Chain, 4 Link
	——	6	Capscrew 3/8" x 1-1/4" Gr.5
	——	6	Flatwasher 3/8"
	——	6	Lockwasher 3/8"
	——	6	Hex Nut 3/8"
12	**50054816**	**1**	**5/16" R.H. Inside Chain Assy.**
	50054614	1	R.H. Outside Chain Bracket
	50018912	8	Plated Chain, 4 Link
	50029811	4	Chain, 3 Link
	——	12	Capscrew 3/8" x 1-1/4" Gr.5
	——	12	Flatwasher 3/8"
	——	12	Lockwasher 3/8"
	——	12	Hex Nut 3/8"
13	**50054818**	**1**	**5/16" L.H. Inside Chain Assy.**
	50054613	1	L.H. Outside Chain Bracket
	50018912	8	Plated Chain, 4 Link
	50029811	4	Chain, 3 Link
	——	12	Capscrew 3/8" x 1-1/4" Gr.5
	——	12	Flatwasher 3/8"
	——	12	Lockwasher 3/8"
	——	12	Hex Nut 3/8"
14	**50054815**	**1**	**5/16" R.H. Outside Chain Assy.**
	50054584	1	R.H. Outside Chain Bracket
	50018912	6	Plated Chain, 4 Link
	——	6	Capscrew 3/8" x 1-1/4" Gr.5
	——	6	Flatwasher 3/8"
	——	6	Lockwasher 3/8"
	——	6	Hex Nut 3/8"
15	**50054821**	**1**	**5/16" L.H. Chain Baffle**
16	**50054820**	**1**	**5/16" R.H. Chain Baffle**
	50054585	1	Chain Bar
	50017264	3	Chain, Plated
	5161212	3	Carriage Bolt x 1-1/4" Gr.5
	——	3	Flatwasher 3/8"
	9131200	3	Locknut 3/8"
17	50054834	2	Chain Stop

© 2012 Alamo Group Inc.

FRONT AND REAR DOUBLE ROW HIGHWAY CHAINS

2715 & 2710 (540 RPM Models)
12715 & 12710 (1000 RPM Models)

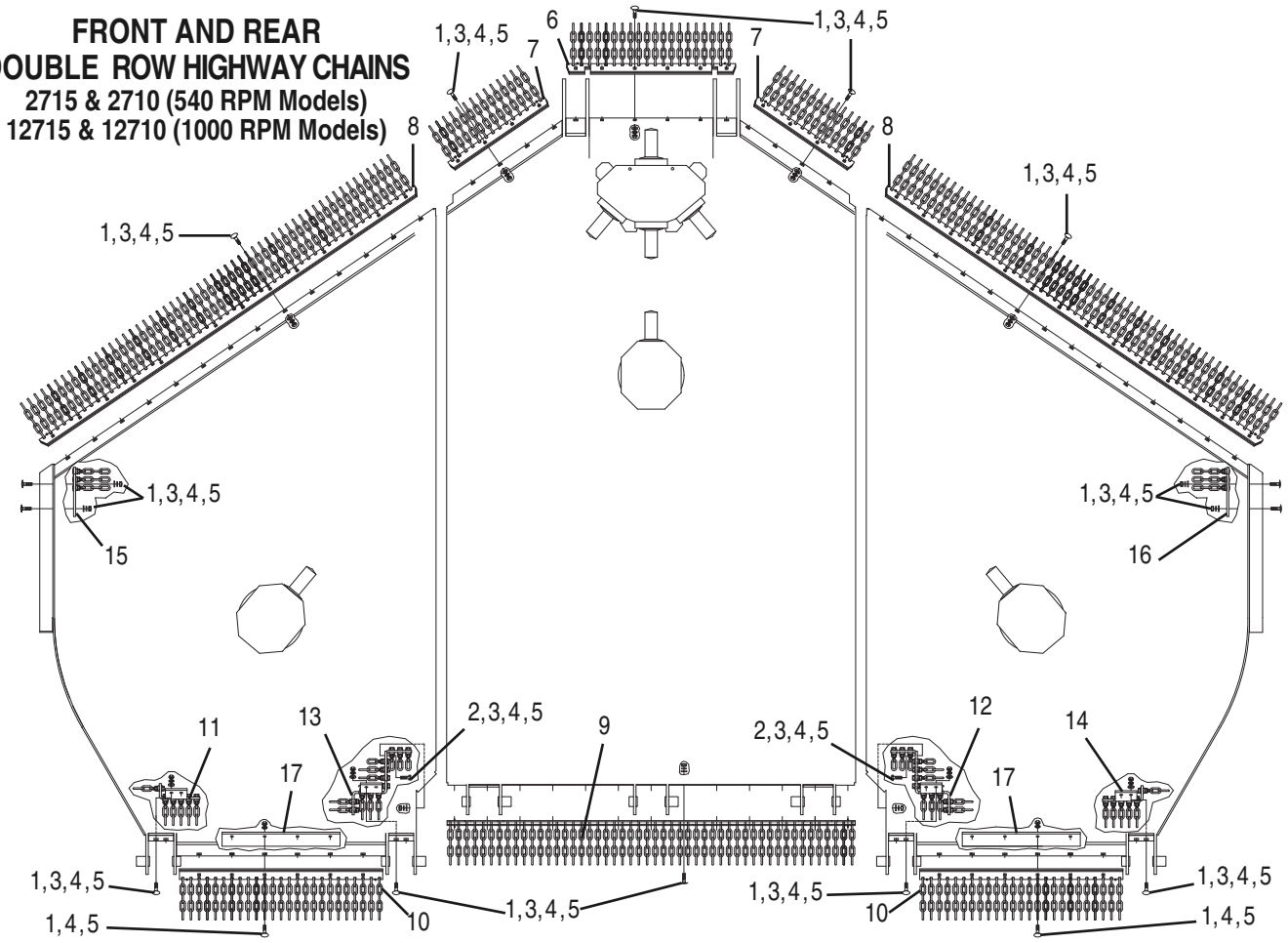

REF. NO.	PART NO.	QTY.	DESCRIPTION
1	44286	79	Carriage Bolt 3/8" x 1-1/2" Gr.5
2	——	6	Capscrew 3/8" x 1-1/4" Gr.5
3	——	73	Flatwasher 3/8"
4	——	85	Lockwasher 3/8"
5	——	85	Hex Nut 3/8"
6	**50054823**	**1**	**5/16" Front Center Double Chain Assy.**
	50054586	1	Front Center Support
	50054587	1	Chain Rod 25-3/4"
	50029803	20	Chain, 9 Link
	50017210	2	Roll Pin, 1/8" x 1-1/4"
7	**50054824**	**2**	**5/16" Front Outside Double Chain Assy.**
	50054579	1	Front Outside Support
	50054580	1	Chain Rod 17-3/4"
	50029803	14	Chain, 9 Link
	50017210	2	Roll Pin, 1/8" x 1-1/4"
8	**50054822**	**2**	**5/16" Front Wing Double Chain Assy.**
	50054577	1	Front Wing Support
	50054578	1	Chain Rod 69-1/8"
	50029803	55	Chain, 9 Link
	50017210	2	Roll Pin, 1/8" x 1-1/4"
9	**50068144**	**1**	**5/16" Rear Center Double Chain Assy.**
	50068142	1	Rear Center Support
	50054583	1	Chain Rod 62-3/8"
	50029803	50	Chain, 9 Link
	50017210	2	Roll Pin, 1/8" x 1-1/4"
10	**50054827**	**2**	**5/16" Rear Wing Double Chain Assy.**
	50054575	1	Rear Wing Support
	50054576	1	Chain Rod 31"
	50029803	25	Chain, 9 Link
	50017210	2	Roll Pin, 1/8" x 1-1/4"
11	**50054832**	**1**	**5/16" L.H. Outside Double Chain Assy.**
	50054581	1	L.H. Outside Chain Bracket
	50029803	6	Chain, 9 Link
	——	6	Capscrew 3/8" x 1-1/4" Gr.5
	——	6	Flatwasher 3/8"
	——	6	Lockwasher 3/8"
	——	6	Hex Nut 3/8"
12	**50054829**	**1**	**5/16" R.H. Inside Double Chain Assy.**
	50054614	1	R.H. Outside Chain Bracket
	50017264	4	Chain, Plated
	50017212	8	Chain, 7 Link
	——	12	Capscrew 3/8" x 1-1/4" Gr.5
	——	12	Flatwasher 3/8"
	——	12	Lockwasher 3/8"
	——	12	Hex Nut 3/8"
13	**50054831**	**1**	**5/16" L.H. Inside Double Chain Assy.**
	50054613	1	L.H. Outside Chain Bracket
	50017264	4	Chain, Plated
	50017212	8	Chain, 7 Link
	——	12	Capscrew 3/8" x 1-1/4" Gr.5
	——	12	Flatwasher 3/8"
	——	12	Lockwasher 3/8"
	——	12	Hex Nut 3/8"
14	**50054828**	**1**	**5/16" R.H. Outside Double Chain Assy.**
	50054584	1	R.H. Outside Chain Bracket
	50029803	6	Chain, 9 Link
	——	6	Capscrew 3/8" x 1-1/4" Gr.5
	——	6	Flatwasher 3/8"
	——	6	Lockwasher 3/8"
	——	6	Hex Nut 3/8"
15	**50054821**	**1**	**5/16" L.H. Chain Baffle**
16	**50054820**	**1**	**5/16" R.H. Chain Baffle**
	50054585	1	Chain Bar
	50017264	3	Chain, Plated
	5161212	3	Carriage Bolt x 1-1/4" Gr.5
	——	3	Flatwasher 3/8"
	------	3	Locknut 3/8"
17	50054834	2	Chain Stop

© 2012 Alamo Group Inc.

FRONT BELTING AND REAR BANDING

2715 & 2710 (540 RPM Models)
12715 & 12710 (1000 RPM Models)

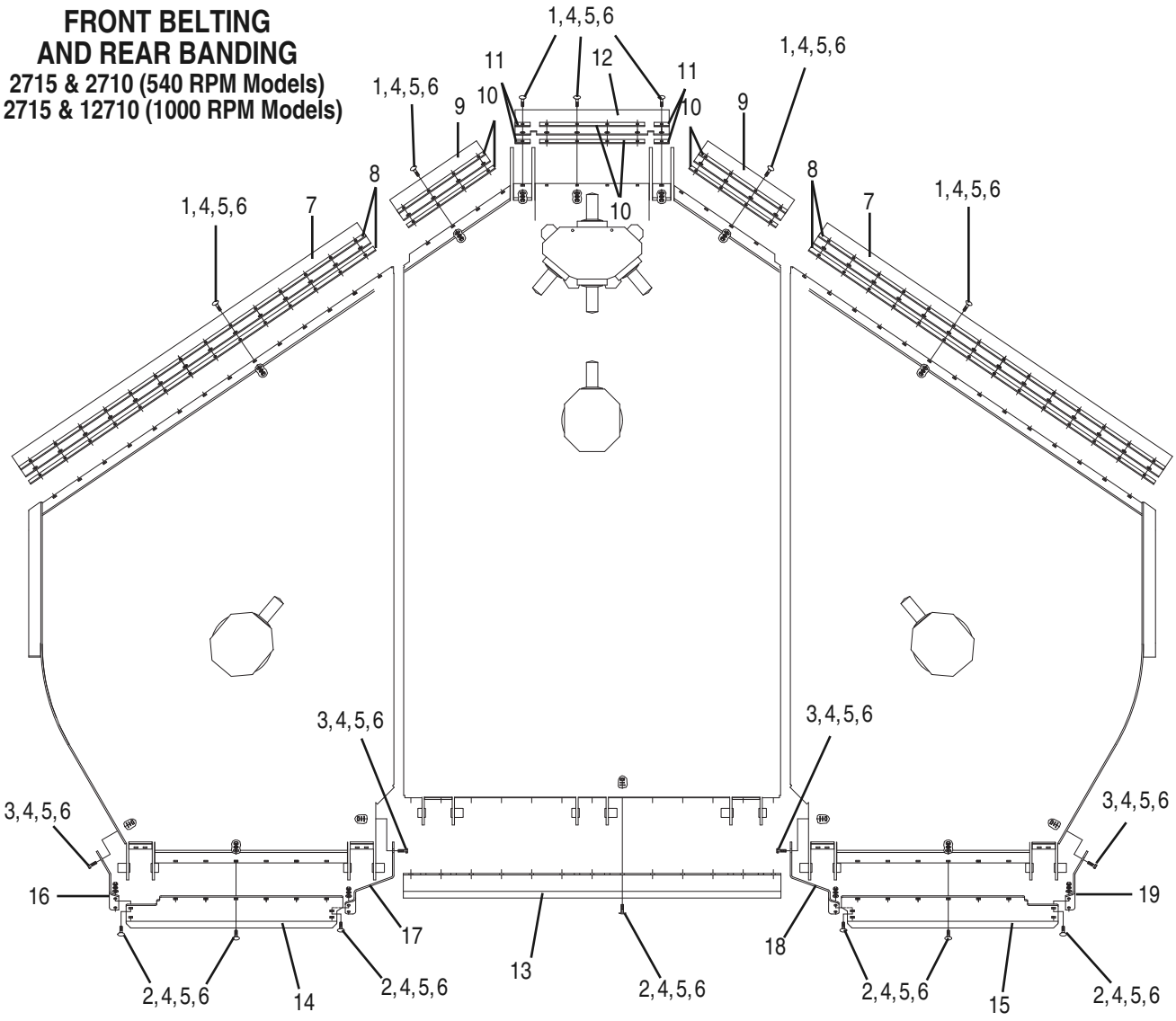

REF. NO.	PART NO.	QTY.	DESCRIPTION
1	44286	44	Carriage Bolt 3/8" x 1 1/2" Gr.5
2	5161212	33	Carriage Bolt 3/8" x 1 1/4" Gr.5
3	——	6	Capscrew 3/8" x 1 1/4" Gr.5
4	——	83	Flatwasher 3/8"
5	——	83	Lockwasher 3/8"
6	——	83	Hex Nut 3/8"
7	50054626	2	Wing Belting
8	50054625	4	Wing Belt Support
9	50054624	2	Center Outside Belting
10	50054622	6	Belt Support, Center & Outside
11	50054621	4	Center Belt Support
12	50054623	1	Center Belting
13	50054629	1	Center Rear Band
14	50054630	1	Center Wing Band, L.H.
15	50054627	1	Center Wing Band, R.H.
16	50054633	1	Outside Wing Band, L.H.
17	50054631	1	Inside Wing Band, L.H.
18	50054628	1	Inside Wing Band, R.H.
19	50054632	1	Outside Wing Band, R.H.

© 2012 Alamo Group Inc.

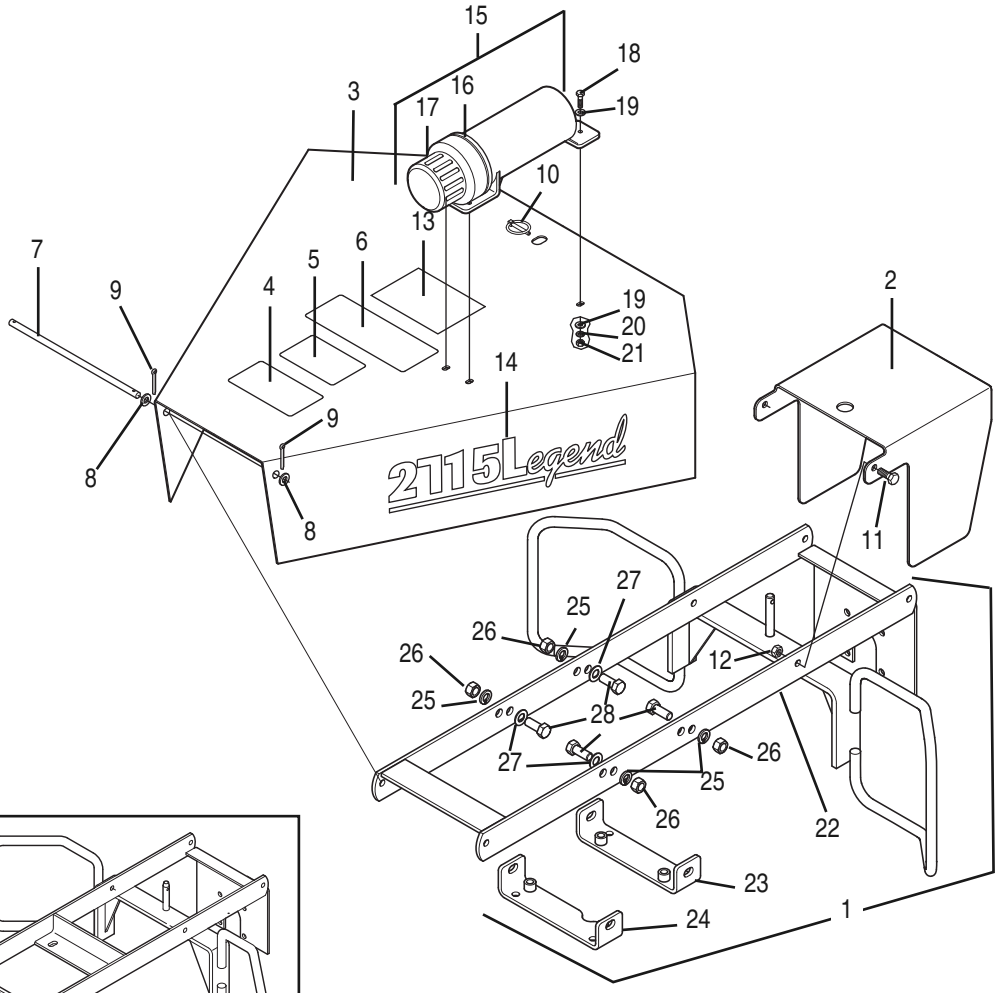

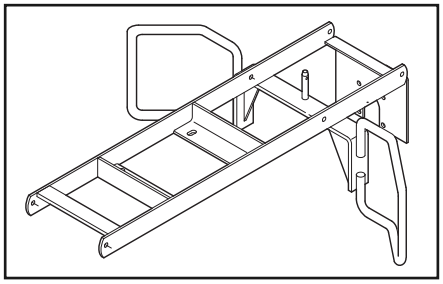

NOTE: To replace older style Shield Mount Weldment (pictured at left) you must order 50066166 Shield Mount Assembly, Ref. No. 1 in parts listing.

OLD STYLE CENTER SHIELD ASSEMBLY
FOR REPLACEMENT OF COMPLETE ASSEMBLY ORDER 50067568 ASSEMBLY

REF. NO.	PART NO.	QTY.	DESCRIPTION
1	50066166	1	Shield Mount Assembly
2	50054386	1	Rear Shield
3	50054550	1	Front Shield w/ Safety Decals
4	91443	1	Important Decal
5	87317	1	Drawbar Decal
6	87340	1	Important Decal
7	50028493	1	Hinge Pin
8	15830	2	Flatwasher 3/8" SAE
9	——	2	Cotter Pin 1/8" x 1"
10	69391	1	Lynch Pin
11	——	2	Capscrew 3/8" x 1"
12	9131200	2	Locknut 3/8"
13	50058285	1	Warranty Decal, Gearbox
14	50054650	2	Model Decal (2715 Models)
	50054651	2	Model Decal (12715 Models)
	50054729	2	Model Decal (2710 Models)
	50054776	2	Model Decal (12710 Models)

REF. NO.	PART NO.	QTY.	DESCRIPTION
15	50035829	1	Owner's Manual Tube Assembly
16	50035830	1	Manual Cap Seal
17	N/A	1	Manual Holder Cap
18	——	3	Capscrew 1/4" x 7/8"
19	——	6	Flatwasher 1/4"
20	——	3	Lockwasher 1/4"
21	——	3	Hex Nut 1/4"
22	50066142	1	Mount Weldment
23	50066147	1	Mount Bracket (Rear)
24	50066150	1	Mount Bracket (Front)
25	----------	4	Lockwasher 1/2"
26	----------	4	Hex Nut 1/2" CP
27	----------	4	Flatwasher 1/2" SAE
28	----------	4	Capscrew 1/2" x 1-1/4" Gr.5

© 2012 Alamo Group Inc.

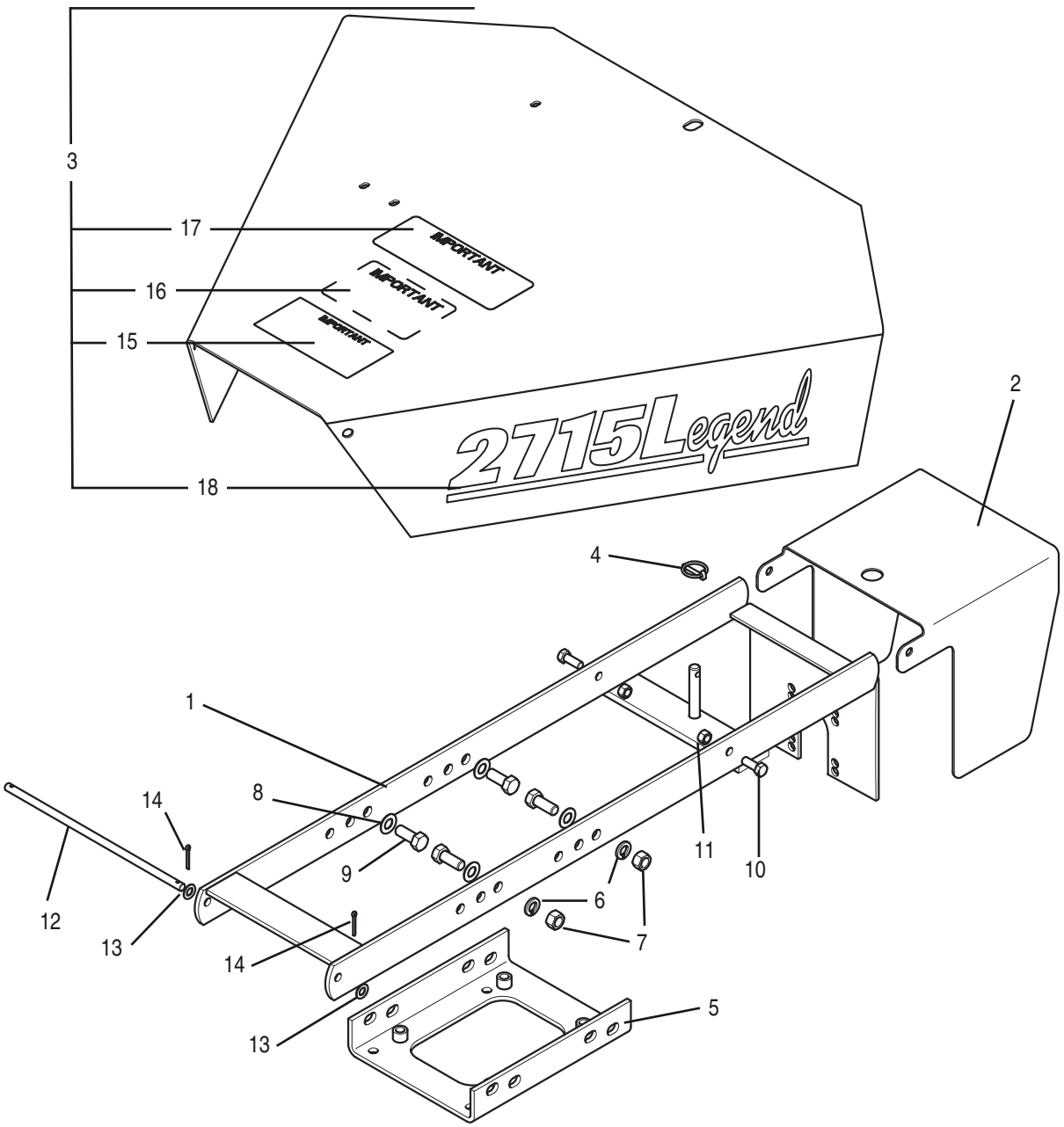

50067568 CENTER SHIELD ASSEMBLY

REF. NO.	PART NO.	QTY.	DESCRIPTION
1	50066171	1	Shield Mount Weldment
2	50054386	1	Rear Shield
3	50067570	1	Shield w/Decals 2715
	50067571	1	Shield w/Decals 12715
	50067572	1	Shield w/Decals 2710
	50067573	1	Shield w/Decals 12710
4	69391	1	Lynch Pin
5	50066174	1	Mounting Bracket Weldment
6	----------	4	Lockwasher 1/2"
7	----------	4	Hex Nut 1/2"
8	----------	4	Flatwasher 1/2" SAE
9	----------	4	Capscrew 1/2" x 1-1/4 Gr.5
10	----------	2	Capscrew 3/8" x 1" Gr.5
11	9131200	2	Locknut 3/8"
12	50028493	1	Hinge Pin
13	----------	2	Flatwasher 3/8"
14	----------	2	Cotter Pin 1/8"x 1"
15	91443	1	Decal, Important
16	87317	1	Decal, Drawbar (Used on Earlier Versions)
17	87340	1	Decal, Important
18	50054650	2	Model Decal 2715 (Shown)
	50054651	2	Model Decal 12715
	50054729	2	Model Decal 2710
	50054776	2	Model Decal 12710

© 2012 Alamo Group Inc.

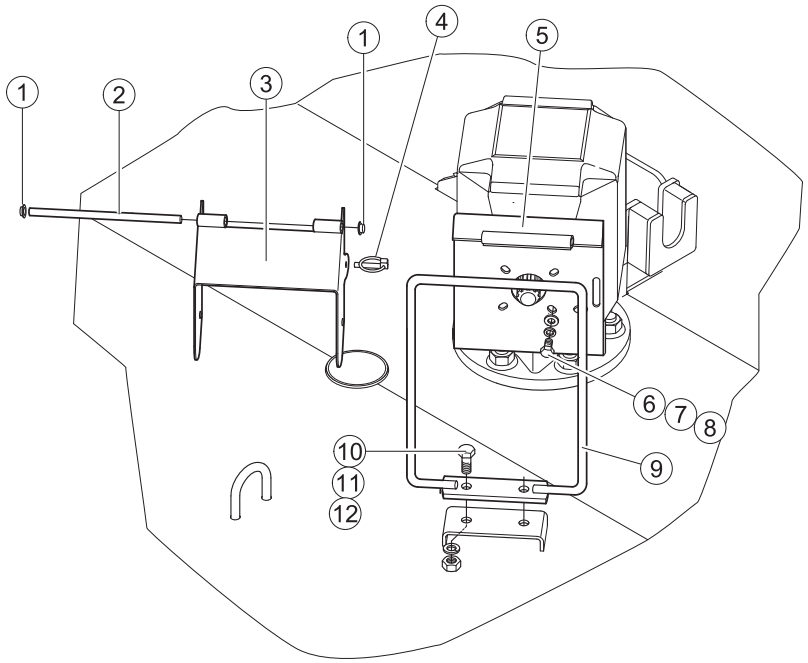

OLD STYLE METAL WING DRIVELINE SHIELDING

Ref. No.	Part No.	Description	Qty. Req'd.
1	67716	Push Nut	2
2	83106	Hinge Rod	1
3	50054472	Shield Weldment	1
4	20312	Lynch Pin	1
5	50017585	Shield Mount	1
6	--------	Capscrew M10 x 1.5 x 20	4
7	--------	Lockwasher M10	4
8	--------	Flatwasher 3/8	4
9	50018318	Retainer Bar	1
10	--------	Capscrew 1/2" x 1-1/4 Gr.r	2
11	--------	Lockwasher1/2"	2
12	--------	Hex Nut 1/2"	2

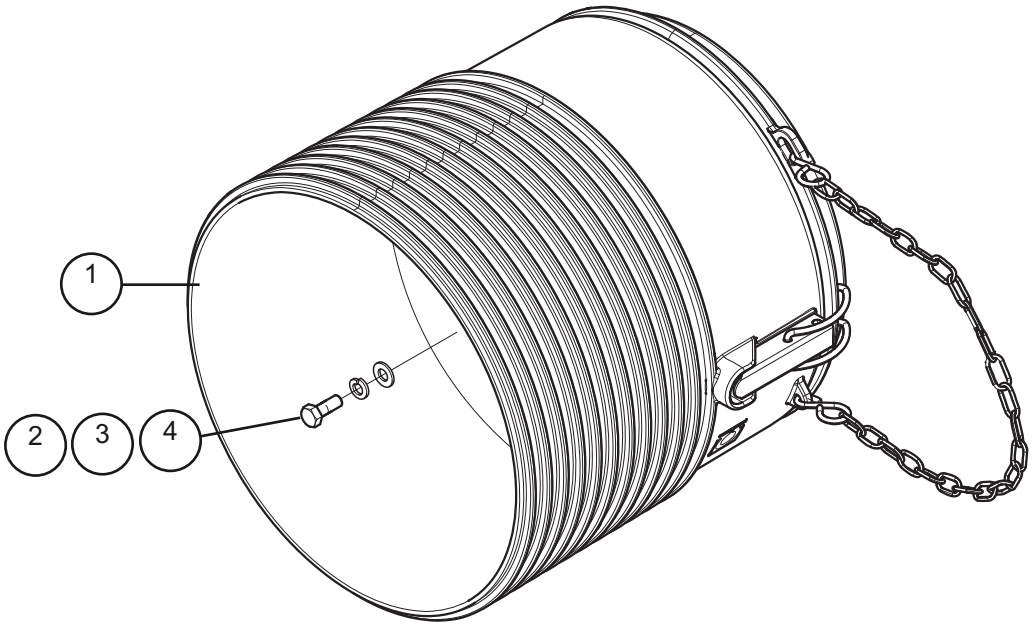

WING DRIVELINE SHIELDING

Ref. No.	Part No.	Description	Qty. Req'd.
1	50062094	Driveline Shield Cone	1
2	---------	Capscrew M10 x 1.5 x 25	4
3	---------	Lockwasher M10	4
4	---------	Flatwasher M10	4

© 2012 Alamo Group Inc.

NOTE: BEFORE ORDERING PARTS FOR THIS GEARBOX FIRST DETERMINE IF THE GEARBOX IS A COMER OR A BONDIOLI & PAVESI MANUFACTURED GEARBOX ASSEMBLY. DETERMINE THIS FROM THE ID TAG ON TOP OF THE GEARBOX HOUSING.

MODEL 2715 & 2710 (540 RPM)
71202* TRANSFER GEARBOX ASSEMBLY*. - 540 RPM
MFG. BY COMER

MODEL 12715 & 12710 (1000 RPM)
71203* TRANSFER GEARBOX ASSEMBLY *- 1000 RPM
MFG. BY COMER

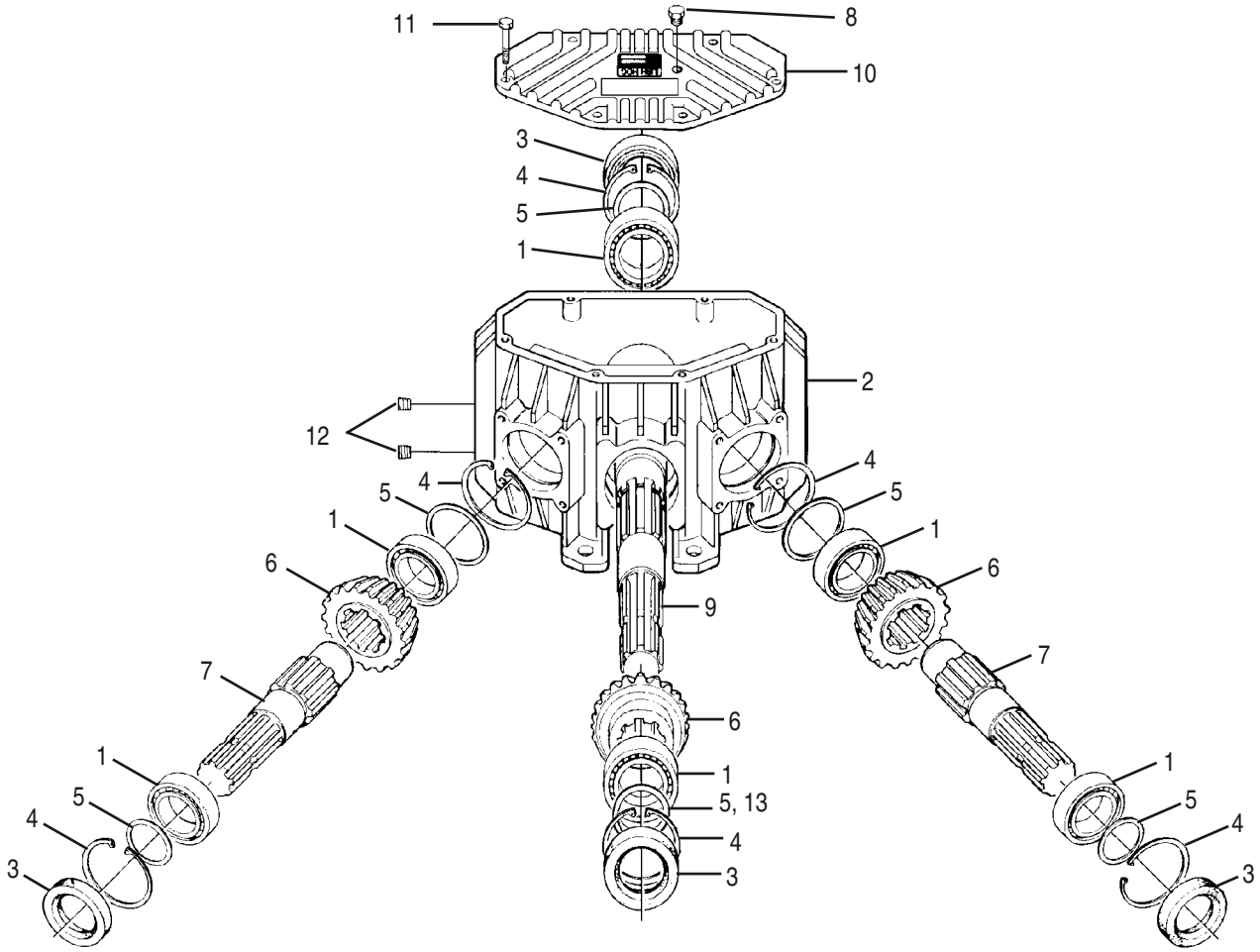

REF. NO.	PART NO.	QTY.	DESCRIPTION
1	70796	6	Bearing
2	76671	1	Casing
3	50068116	4	Oil Seal
4	70881	6	Snap Ring
5	70752	6	Shim .3
6	50076037	1	Gear, Kit (540 RPM) 1-24T & 2 - 20TGears
	50076038	1	Gear, Kit (1000 RPM) 2-24T & 1 - 20TGears
7	76673	2	Shaft 1-3/4" Z20
8	80538	1	Vent Plug
9	76675	1	Shaft, 1-3/4" Z20
10	76676	1	Cover
11	44489BH	6	Capscrew M10 x 1.5 x 35 Gr.8.8
12	70181	2	Gas Plug 3/8"
13	70753	6	Shim .4
	70754	6	Shim .5
	70755	6	Shim .6

© 2012 Alamo Group Inc.

NOTE: BEFORE ORDERING PARTS FOR THIS GEARBOX FIRST DETERMINE IF THE GEARBOX IS A COMER OR A BONDIOLI & PAVESI MANUFACTURED GEARBOX ASSEMBLY. DETERMINE THIS FROM THE ID TAG ON TOP OF THE GEARBOX HOUSING.

MODEL 2715 & 2710 (540 RPM)
50045696* TRANSFER GEARBOX ASSEMBLY. - *540 RPM
REPLACED BY 71202 GEARBOX ASSY.
MFG. BY BONDIOLI & PAVESI

MODEL 12715 & 12710 (1000 RPM)
50045697* TRANSFER GEARBOX ASSEMBLY - *1000 RPM
MFG. BY BOBDIOLI & PAVESI

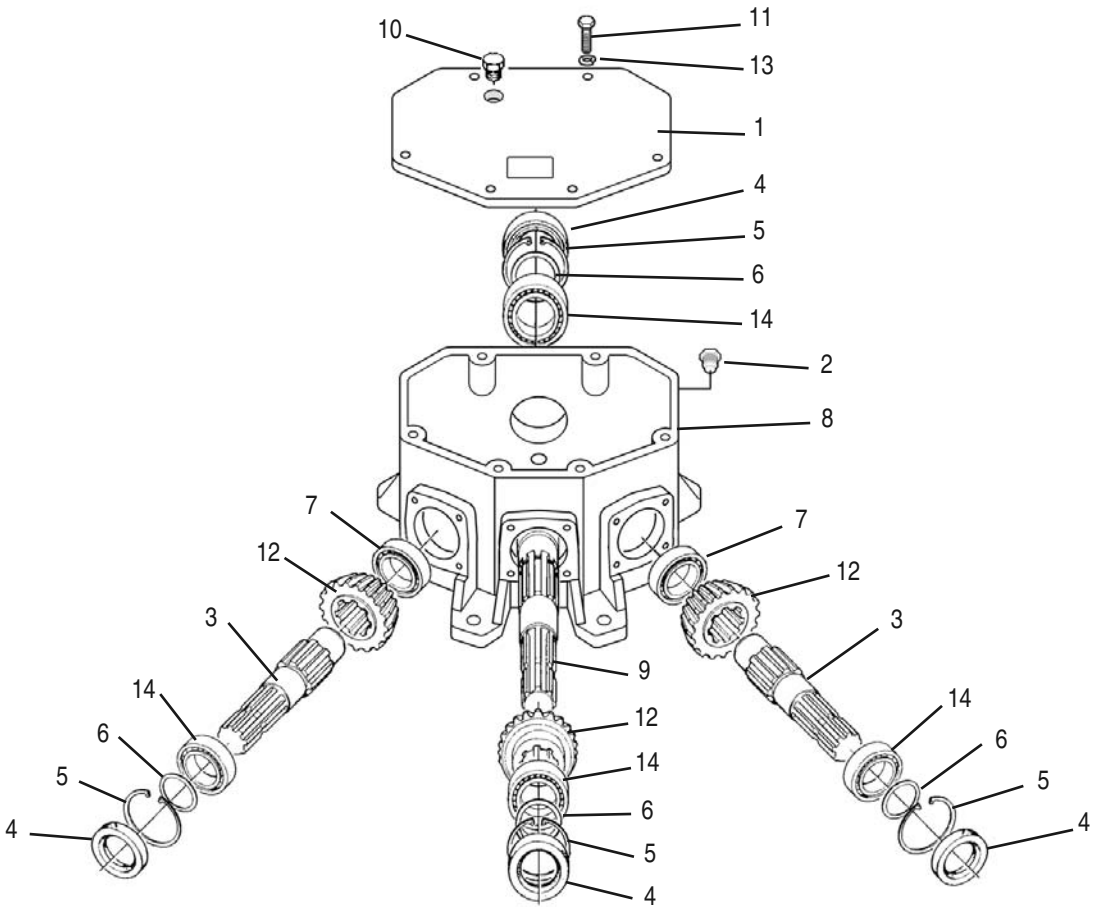

REF. NO.	PART NO.	QTY.	DESCRIPTION
1	50066914	1	Top Cover
2	50066915	1	Drain Plug (Magnetic)
3	50066917	2	Out Put Shafts 1-3/4" 20 Spline
4	50066918	4	Oil Seal
5	50066919	4	Snap Ring 85 x 4 mm
6	50066920	4	Shim Kit
7	70797	2	Bearing 35 x 72 x 18.25mm
8	50066922	1	Housing
9	50066923	1	Input Shaft
10	50066924	1	Breather Plug (Gas) 3/8"
11	50066925	6	Capscrew m10 x 22 x 1.5 c8.8
12	50066916	1	Gear Set for 540 RPM Gearbox 50045696 (Two 19 tooth gears and One 23 tooth gear)
	50066926	1	Gear Set for 1000 RPM Gearbox 50045697 (Two 23 tooth gears and One 19 tooth gear)
13	50016135	6	Lockwasher M10
14	70796	4	Bearing

© 2012 Alamo Group Inc.

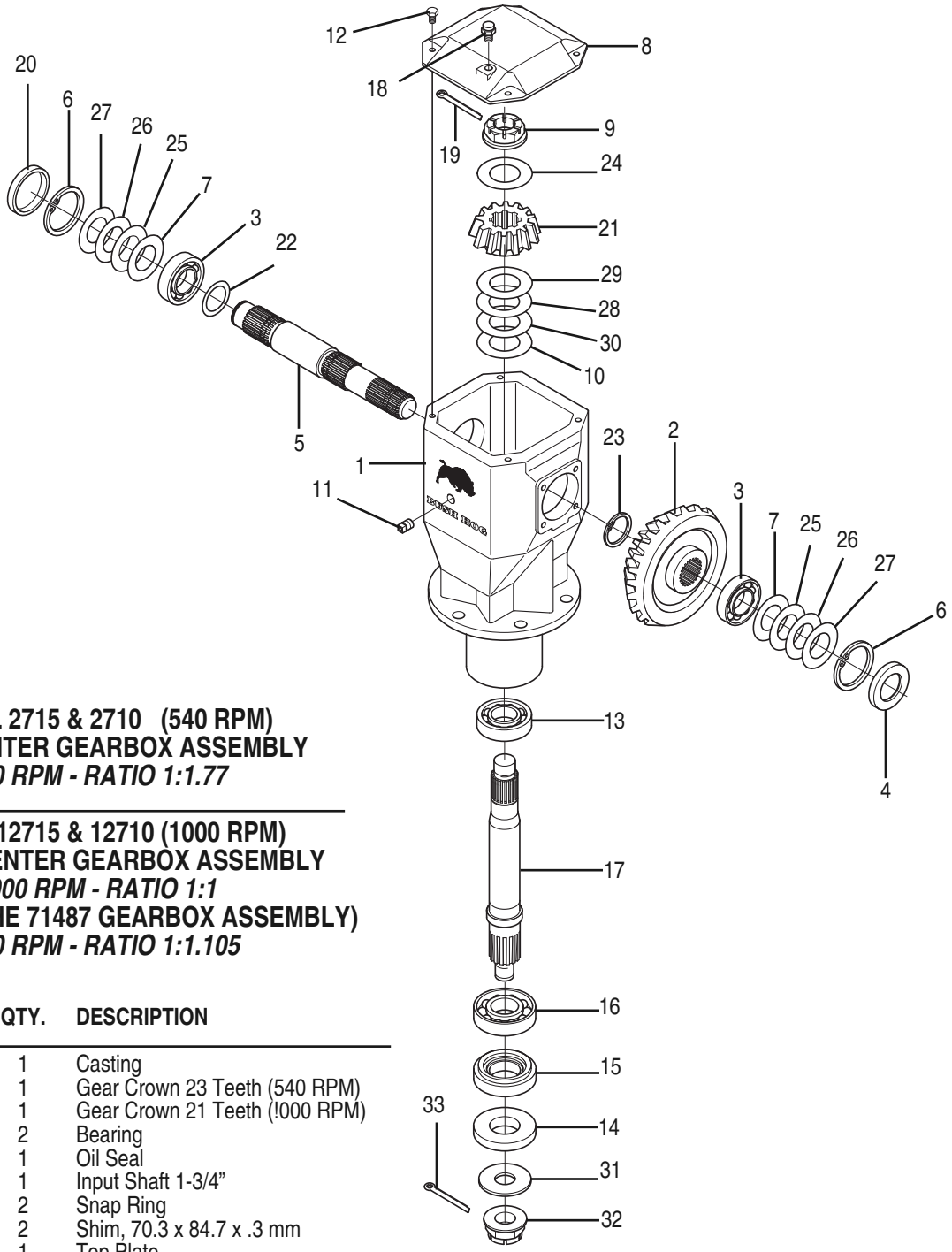

MODEL 2715 & 2710 (540 RPM)
71485 CENTER GEARBOX ASSEMBLY
540 RPM - RATIO 1:1.77

MODEL 12715 & 12710 (1000 RPM)
70995BH CENTER GEARBOX ASSEMBLY
1000 RPM - RATIO 1:1
(REPLACES THE 71487 GEARBOX ASSEMBLY)
1000 RPM - RATIO 1:1.105

REF. NO.	PART NO.	QTY.	DESCRIPTION
1	76658	1	Casting
2	50056443	1	Gear Crown 23 Teeth (540 RPM)
	70960	1	Gear Crown 21 Teeth (!000 RPM)
3	70796	2	Bearing
4	50068116	1	Oil Seal
5	76659	1	Input Shaft 1-3/4”
6	70189	2	Snap Ring
7	70752	2	Shim, 70.3 x 84.7 x .3 mm
8	76660	1	Top Plate
9	70586	1	Castle Nut
10	70344	1	Shim, 50.3 x 70.3 x .3 mm
11	70292	1	Oil Filler Plug 1/2” Gas
12	44595BH	4	Capscrew M10 x 14 Gr.8.8
13	70800	1	Bearing
14	76661	1	Protective Washer
15	50062245	1	Oil Seal
16	70410	1	Bearing
17	76663	1	Shaft, Output
18	80538	1	Vent Plug
19	71492	1	Cotter Pin B 5 x 60
20	70725	1	Cap
21	50056444	1	Gear Pinion 13 Teeth (540 RPM)
	70960	1	Gear Crown 21Teeth (1000 RPM)

REF. NO.	PART NO.	QTY.	DESCRIPTION
22	70740	1	Shim, 45.3 x 65.3 x 2.5 mm
23	70722	1	Snap Ring
24	76634	1	Shim, 40.3 x 61.7 x 1 mm
25	70753	2	Shim, 70.3 x 84.7 x .4 mm
26	70754	2	Shim, 70.3 x 84.7 x .5 mm
27	70755	2	Shim, 70.3 x 84.7 x 1 mm
28	70345BH	1	Shim, 50.3 x 70.3 x .5 mm
29	70346BH	1	Shim, 50.3 x 70.3 x 1 mm
30	70347	1	Shim, 50.3 x 70.3 x .4 mm
31	76664	1	Blank Washer
32	70418	1	Castle Nut M36
33	70419	1	Cotter Pin

© 2012 Alamo Group Inc.

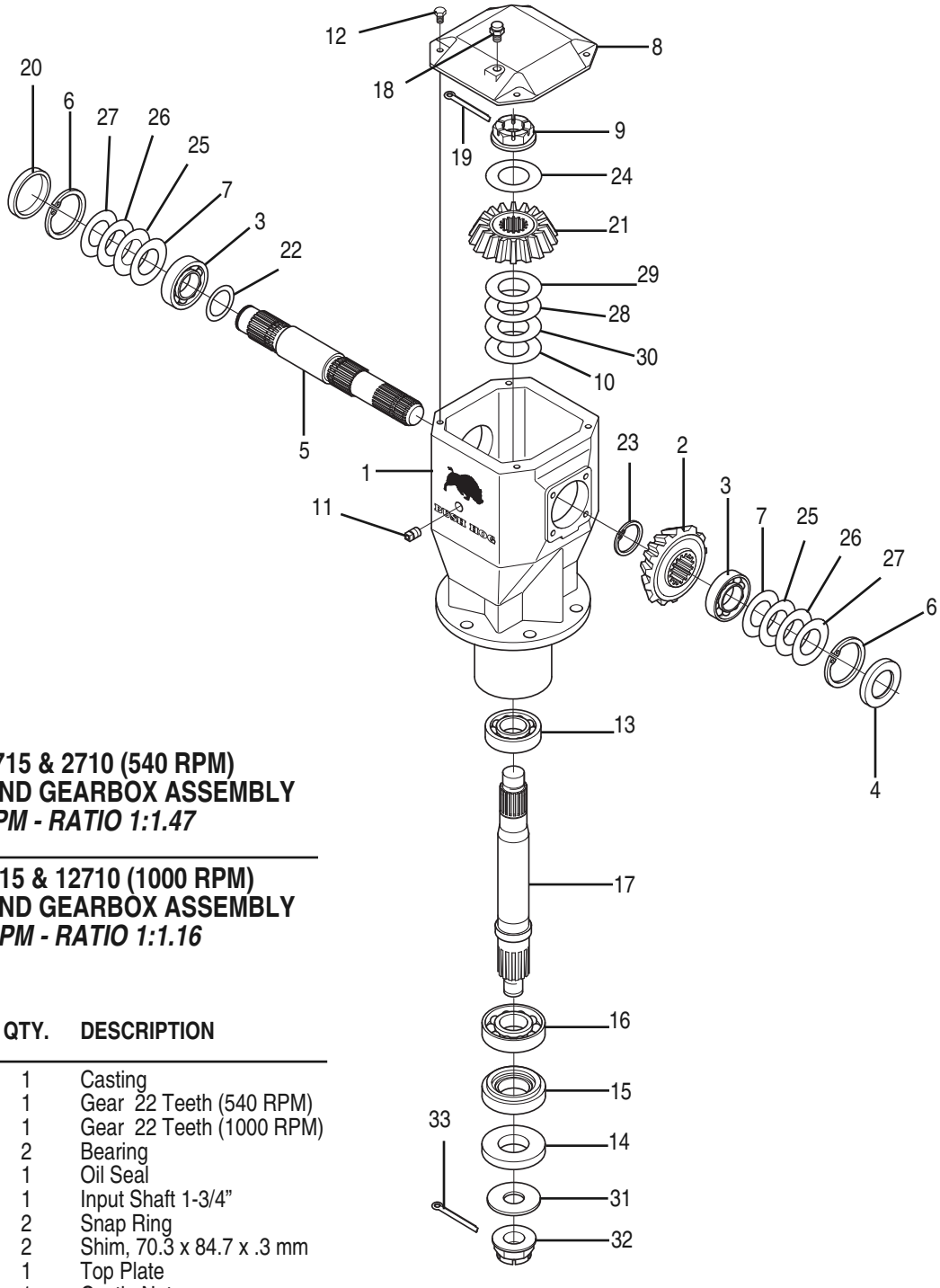

MODEL 2715 & 2710 (540 RPM)
71486 LEFT HAND GEARBOX ASSEMBLY
540 RPM - RATIO 1:1.47

MODEL 12715 & 12710 (1000 RPM)
71489 LEFT HAND GEARBOX ASSEMBLY
1000 RPM - RATIO 1:1.16

REF. NO.	PART NO.	QTY.	DESCRIPTION
1	76658	1	Casting
2	50056441	1	Gear 22 Teeth (540 RPM)
	76825	1	Gear 22 Teeth (1000 RPM)
3	70796	2	Bearing
4	50068116	1	Oil Seal
5	76659	1	Input Shaft 1-3/4"
6	70189	2	Snap Ring
7	70752	2	Shim, 70.3 x 84.7 x .3 mm
8	76660	1	Top Plate
9	70586	1	Castle Nut
10	70344	1	Shim, 50.3 x 70.3 x .3 mm
11	70292	1	Oil Filler Plug 1/2" Gas
12	44595BH	4	Capscrew M10 x 14 Gr.8.8
13	70800	1	Bearing
14	76661	1	Protective Washer
15	50062245	1	Oil Seal
16	70410	1	Bearing
17	76663	1	Shaft, Output
18	80538	1	Vent Plug
19	71492	1	Cotter Pin B 5 x 60
20	70725	1	Cap
21	50056442	1	Gear 15 Teeth (540 RPM)
	76826	1	Gear 19 Teeth (1000 RPM)

REF. NO.	PART NO.	QTY.	DESCRIPTION
22	70740	1	Shim, 45.3 x 65.3 x 2.5 mm
23	70722	1	Snap Ring
24	76634	1	Shim, 40.3 x 61.7 x 1 mm
25	70753	2	Shim, 70.3 x 84.7 x .4 mm
26	70754	2	Shim, 70.3 x 84.7 x .5 mm
27	70755	2	Shim, 70.3 x 84.7 x 1 mm
28	70345BH	1	Shim, 50.3 x 70.3 x .5 mm
29	70346BH	1	Shim, 50.3 x 70.3 x 1 mm
30	70347	1	Shim, 50.3 x 70.3 x .4 mm
31	76664	1	Blank Washer
32	70418	1	Castle Nut M36
33	70419	1	Cotter Pin

© 2012 Alamo Group Inc.

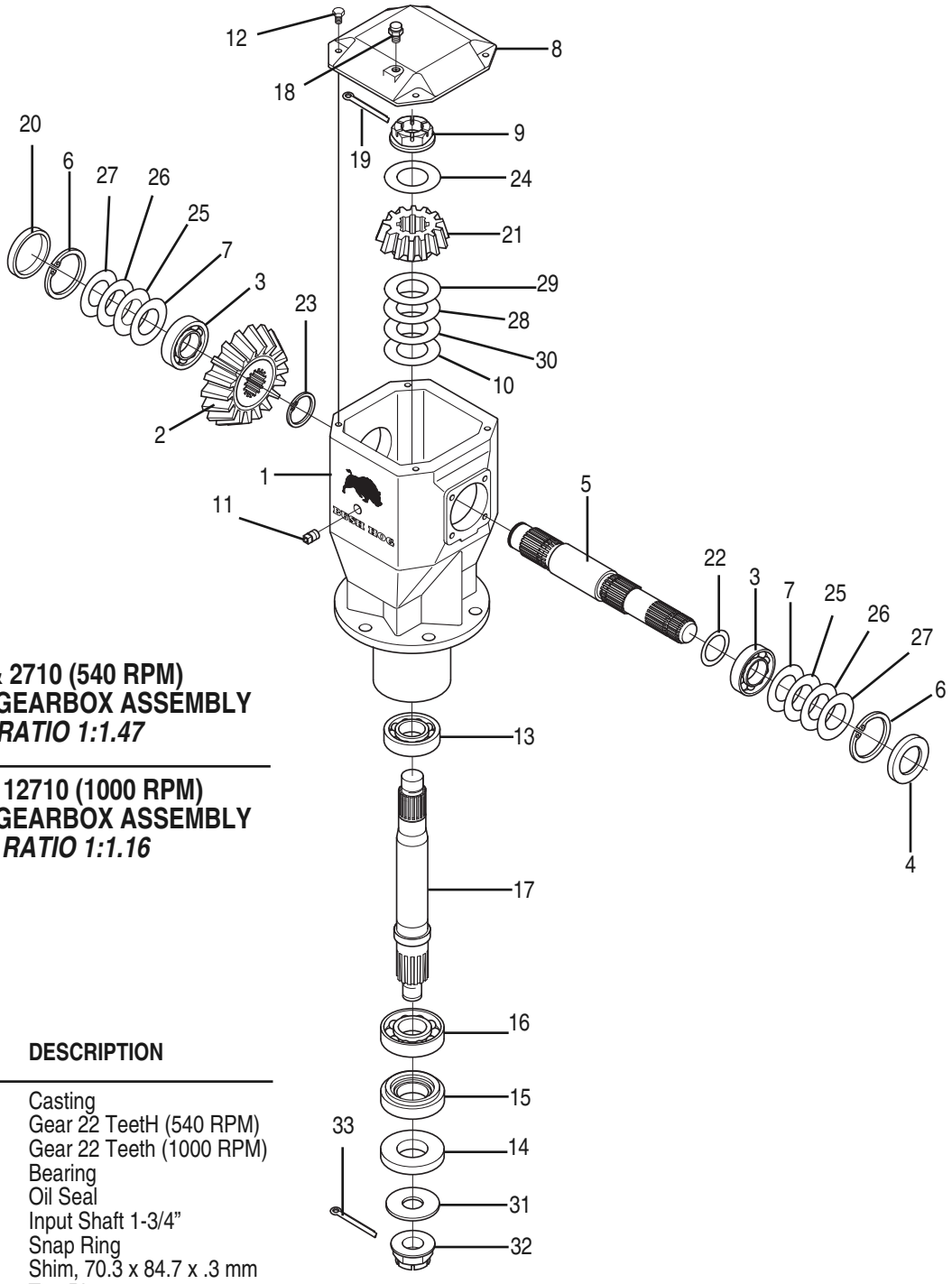

MODEL 2715 & 2710 (540 RPM)
71488 RIGHT HAND GEARBOX ASSEMBLY
540 RPM - RATIO 1:1.47

MODEL 12715 & 12710 (1000 RPM)
71490 RIGHT HAND GEARBOX ASSEMBLY
1000 RPM - RATIO 1:1.16

REF. NO.	PART NO.	QTY.	DESCRIPTION
1	76658	1	Casting
2	50056441	1	Gear 22 TeetH (540 RPM)
	76825	1	Gear 22 Teeth (1000 RPM)
3	70796	2	Bearing
4	50068116	1	Oil Seal
5	76659	1	Input Shaft 1-3/4"
6	70189	2	Snap Ring
7	70752	2	Shim, 70.3 x 84.7 x .3 mm
8	76660	1	Top Plate
9	70586	1	Castle Nut
10	70344	1	Shim, 50.3 x 70.3 x .3 mm
11	70292	1	Oil Filler Plug 1/2" Gas
12	44595BH	4	Capscrew M10 x 14 Gr.8.8
13	70800	1	Bearing
14	76661	1	Protective Washer
15	50062245	1	Oil Seal
16	70410	1	Bearing
17	76663	1	Shaft, Output
18	80538	1	Vent Plug
19	71492	1	Cotter Pin B 5 x 60
20	70725	1	Cap
21	50056442	1	Gear 15 Teeth (540 RPM)
	76826	1	Gear 19 Teeth (1000 RPM)

REF. NO.	PART NO.	QTY.	DESCRIPTION
22	70740	1	Shim, 45.3 x 65.3 x 2.5 mm
23	70722	1	Snap Ring
24	76634	1	Shim, 40.3 x 61.7 x 1 mm
25	70753	2	Shim, 70.3 x 84.7 x .4 mm
26	70754	2	Shim, 70.3 x 84.7 x .5 mm
27	70755	2	Shim, 70.3 x 84.7 x 1 mm
28	70345BH	1	Shim, 50.3 x 70.3 x .5 mm
29	70346BH	1	Shim, 50.3 x 70.3 x 1 mm
30	70347	1	Shim, 50.3 x 70.3 x .4 mm
31	76664	1	Blank Washer
32	70418	1	Castle Nut M36
33	70419	1	Cotter Pin

© 2012 Alamo Group Inc.

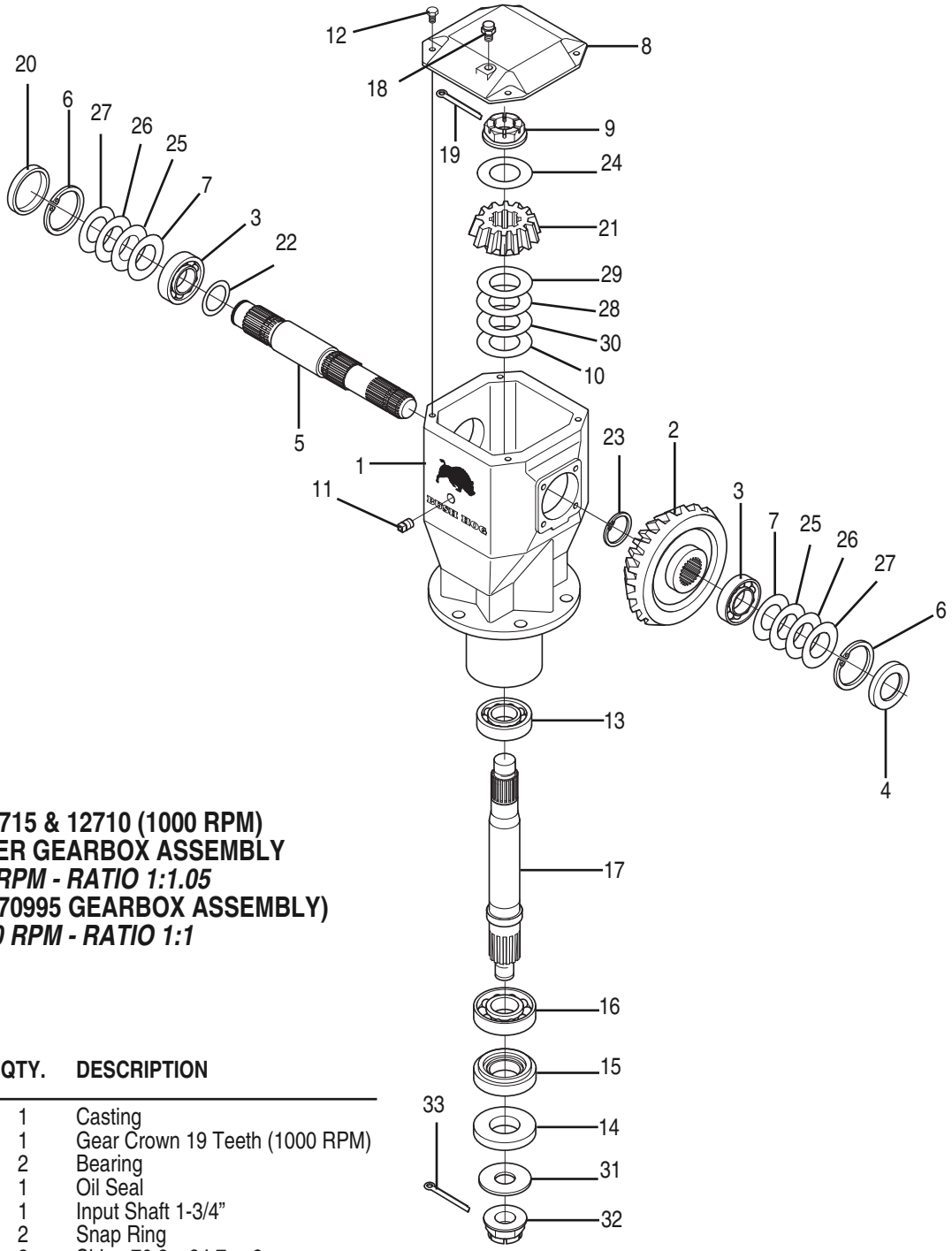

MODEL 12715 & 12710 (1000 RPM)
71487 CENTER GEARBOX ASSEMBLY
1000 RPM - RATIO 1:1.05
(REPLACED BY 70995 GEARBOX ASSEMBLY)
1000 RPM - RATIO 1:1

REF. NO.	PART NO.	QTY.	DESCRIPTION
1	76658	1	Casting
2	76882	1	Gear Crown 19 Teeth (1000 RPM)
3	70796	2	Bearing
4	50068116	1	Oil Seal
5	76659	1	Input Shaft 1-3/4”
6	70189	2	Snap Ring
7	70752	2	Shim, 70.3 x 84.7 x .3 mm
8	76660	1	Top Plate
9	70586	1	Castle Nut
10	70344	1	Shim, 50.3 x 70.3 x .3 mm
11	70292	1	Oil Filler Plug 1/2” Gas
12	44595BH	4	Capscrew M10 x 14 Gr.8.8
13	70800	1	Bearing
14	76661	1	Protective Washer
15	50062245	1	Oil Seal
16	70410	1	Bearing
17	76663	1	Shaft, Output
18	80538	1	Vent Plug
19	71492	1	Cotter Pin B 5 x 60
20	70725	1	Cap
21	76883	1	Gear Pinion 20 Teeth (1000 RPM)

REF. NO.	PART NO.	QTY.	DESCRIPTION
22	70740	1	Shim, 45.3 x 65.3 x 2.5 mm
23	70722	1	Snap Ring
24	76634	1	Shim, 40.3 x 61.7 x 1 mm
25	70753	2	Shim, 70.3 x 84.7 x .4 mm
26	70754	2	Shim, 70.3 x 84.7 x .5 mm
27	70755	2	Shim, 70.3 x 84.7 x 1 mm
28	70345BH	1	Shim, 50.3 x 70.3 x .5 mm
29	70346BH	1	Shim, 50.3 x 70.3 x 1 mm
30	70347	1	Shim, 50.3 x 70.3 x .4 mm
31	76664	1	Blank Washer
32	70418	1	Castle Nut M36
33	70419	1	Cotter Pin

© 2012 Alamo Group Inc.

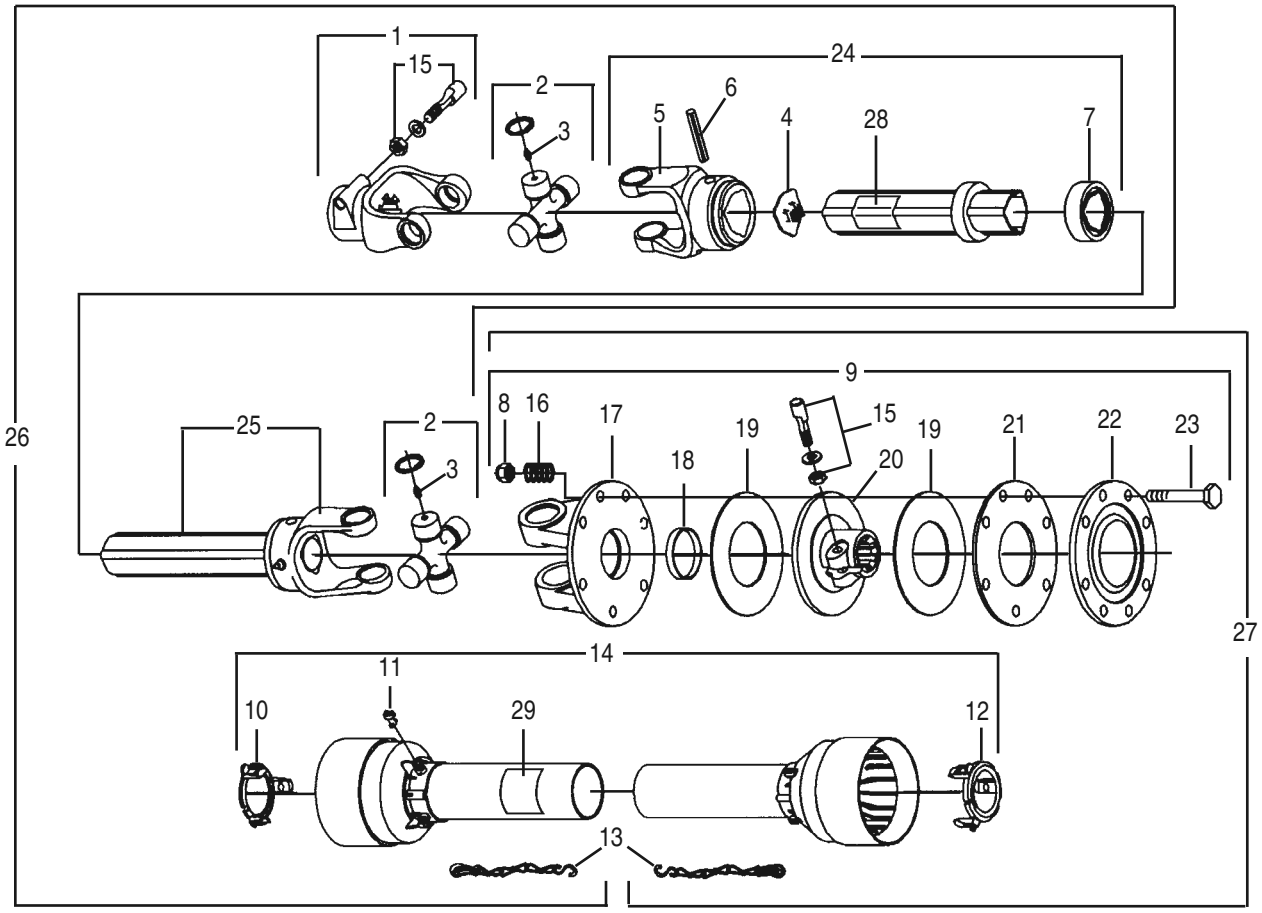

76990 WING DRIVESHAFT
For 2715, 2710, 12715 & 12710 Models
1-3/4" – 20 Spline
Mfd. by Comer / EG
ASAE SIZE 4

REF. NO.	PART NO.	QTY.	DESCRIPTION
1	76422	1	Complete Yoke
2	50060543	2	Cross Journal Set
3	76335	2	Grease Nipple
4	76960	1	Plastic Cap For Outer Tube
5	66865	1	Outer Yoke
6	66866	1	Roll Pin For Outer Tube
7	76959	1	Wiper
8	44154BH	8	Lock Nut M10 x 1.5
9	76308	1	Complete Disc Clutch
10	50056417	1	Guard Retaining Collar, Outer
11	50056404	6	Bolt
12	50056418	1	Guard Retaining Collar, Inner
13	64814	2	Safety Chain
14	50056435	1	Complete Guard w/ Instr. Man.
15	76247	2	Tapered Pin Set 1-3/4"

REF. NO.	PART NO.	QTY.	DESCRIPTION
16	76080	8	Spring
17	76164	1	Flanged Yoke
18	76082	1	Bushing
19	76083	2	Lining Ring
20	76309	1	Clutch Support
21	76085	1	Inner Plate
22	76086	1	Pressure Plate
23	44155BH	8	Capscrew M10 x 1.5 x 85
24	50056436	1	Female Tube w/ Yoke and Lube
25	50056437	1	Male Tube w/ Yoke and Lube
26	50056438	1	Half Female Shaft w/ Guarding
27	50056439	1	Half Male Shaft w/ Guarding
28	78786	1	Danger Decal, Outer Tube
29	78608	1	Danger Decal, Outer Shield

© 2012 Alamo Group Inc.

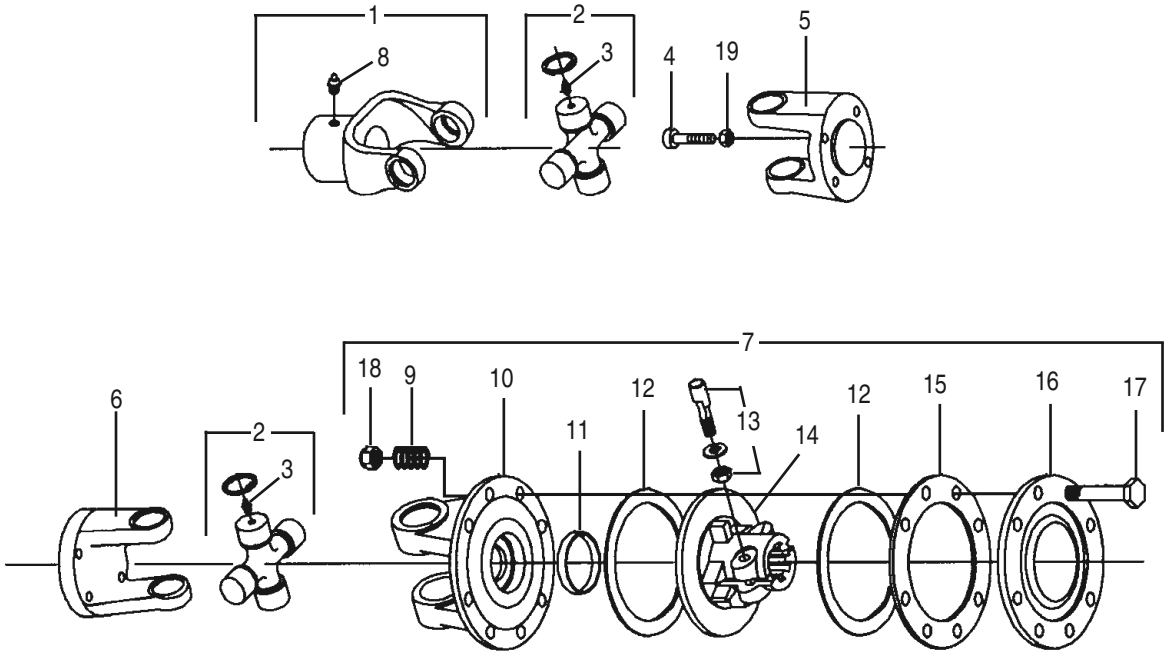

50053102 CENTER DRIVESHAFT

Mfd. by Comer/EG
ASAE SIZE 4
2715 & 2710 (540 RPM Models)
12715 & 12710(1000 RPM Models)

REF. NO.	PART NO.	QTY.	DESCRIPTION
1	50056410	1	Splined Yoke w/ Grease Nipple
2	50060543	2	Cross Journal Set
3	76335	2	Grease Fitting
4	45314BH	4	Soc. Hd. Capscrew M12 x 1.25 x 50 Gr.12.9
5	76914	1	Flange Yoke Male
6	76915	1	Flange Yoke Female
7	76308	1	Complete Disk Clutch Assy.
8	63946	1	Grease Nipple
9	76080	8	Spring
10	76164	1	Flange Yoke
11	76082	1	Bushing
12	76083	2	Inner Lining
13	76247	1	Tapered Pin Set 1-3/4”
14	76309	1	Clutch Support
15	76085	1	Inner Plate
16	76086	1	Pressure Plate
17	44155BH	8	Capscrew M10 x 1.5 x 85
18	44154BH	8	Lock Nut M10 x 1.5
19	44229BH	4	Lock Nut M12 x 1.25

© 2012 Alamo Group Inc.

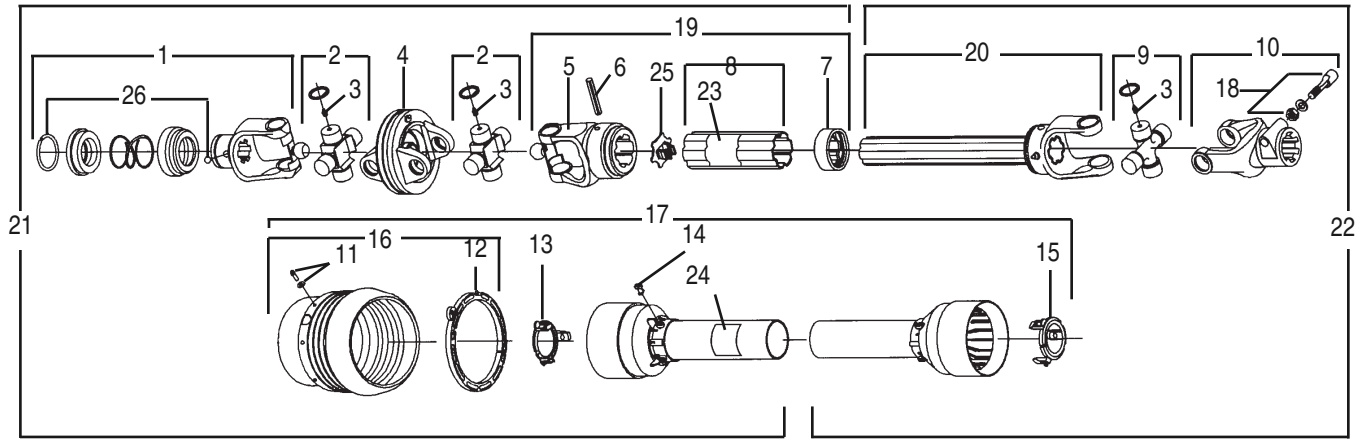

50054510SP C.V. Driveshaft
Input : 1-3/8" – 6 Spline, ASAE Size 5
Manufactured by Comer / EG
2715 & 2710 (540 RPM Models)
(Replaced by 50069764SP)

REF. NO.	PART NO.	QTY.	DESCRIPTION
1	50017504	1	Complete Collar Yoke (Tractor)
2	50056400	2	Cross Journal Set
3	76335	3	Grease Nipple
4	76357	1	Wide Angle Double Yoke
5	76896	1	Outer Yoke
6	67108	1	Roll Pin For Outer Tube
7	76897	1	Wiper
8	76898	1	Complete Outer Tube
9	50056401	1	Cross Journal Set
10	76239BH	1	Complete Yoke
11	76362	6	Screw Kit
12	50056402	1	Bearing Ring
13	50056403	1	Guard Retaing Collar for Outer Tube
14	50056404	6	Bolt
15	50056405	1	Guard Retaining Collar for Inner Tube
16	50056406	1	Guard Cone Set
17	50056429	1	Complete Guard w/Inst. Man.
18	76247	1	Tapered Pin Set 1-3/4"
19	76762	1	Female Tube w/ Yoke & Lube System
20	50056431	1	Male Tube w/ Yoke & Lube System
21	50056432	1	Half Female Shaft w/ Guarding
22	50056433	1	Half Male Shaft w/ Guarding
23	78786	1	Danger Decal for Outer Tube
24	78608	1	Danger Decal for Outer Guard Tube
25	76899	1	Plastic Cap
26	50017480	1	Kit Collar For Yoke 1-3/8"

50054511SP C.V. Driveshaft
Input : 1-3/8" – 21 Spline, ASAE Size 4
Manufactured by Comer / EG
12715 & 12710 (1000 RPM Models)

REF. NO.	PART NO.	QTY.	DESCRIPTION
1	50017482	1	Complete Collar Yoke
2	50056414	2	Cross Journal Set
3	76335	3	Grease Nipple
4	76421	1	Wide Angle Double Yoke
5	76893	1	Outer Yoke
6	66866	1	Roll Pin For Outer Tube
7	76894	1	Wiper
8	76904	1	Complete Outer Tube
9	50056411	1	Cross Journal Set
10	76422	1	Complete Yoke
11	76362	6	Screw Kit
12	50056416	1	Bearing Ring
13	50056417	1	Guard Retaing Collar for Outer Tube
14	50056404	6	Bolt
15	50056418	1	Guard Retaining Collar for Inner Tube
16	50056419	1	Guard Cone Set
17	50056440	1	Complete Guard w/Inst. Man.
18	76247	1	Tapered Pin Set 1-3/4"
19	76772	1	Female Tube w/ Yoke & Lube System
20	50056426	1	Male Tube w/ Yoke & Lube System
21	50056427	1	Half Female Shaft w/ Guarding
22	50056428	1	Half Male Shaft w/ Guarding
23	78786	1	Danger Decal for Outer Tube
24	78608	1	Danger Decal for Outer Guard Tube
25	76892	1	Plastic Cap
26	50017480	1	Kit Collar For Yoke 1-3/8"

© 2012 Alamo Group Inc.

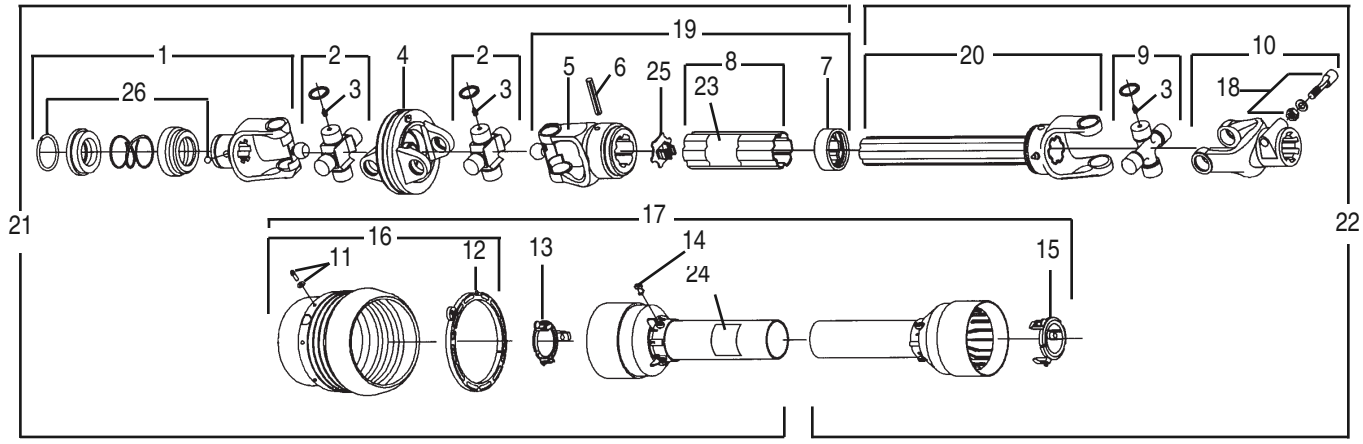

50054512SP C.V. Driveshaft
Input : 1-3/4" – 20 Spline, ASAE Size 4
Manufactured by Comer / EG
12715 & 12710 (1000 RPM Models)

REF. NO.	PART NO.	QTY.	DESCRIPTION
1	50017501	1	Complete Collar Yoke (Tractor)
2	50056414	2	Cross Journal Set
3	76335	3	Grease Nipple
4	76421	1	Wide Angle Double Yoke
5	76893	1	Outer Yoke
6	66866	1	Roll Pin For Outer Tube
7	76894	1	Wiper
8	76895	1	Complete Outer Tube
9	50056411	1	Cross Journal Set
10	76422	1	Complete Yoke
11	76362	6	Screw Kit
12	50056416	1	Bearing Ring
13	50056417	1	Guard Retaing Collar for Outer Tube
14	50056404	6	Bolt
15	50056418	1	Guard Retaining Collar for Inner Tube
16	50056419	1	Guard Cone Set
17	50056420	1	Complete Guard w/Inst. Man.
18	76247	1	Tapered Pin Set 1-3/4"
19	50056421	1	Female Tube w/ Yoke & Lube System
20	50056422	1	Male Tube w/ Yoke & Lube System
21	50056423	1	Half Female Shaft w/ Guarding
22	50056424	1	Half Male Shaft w/ Guarding
23	78786	1	Danger Decal for Outer Tube
24	78608	1	Danger Decal for Outer Guard Tube
25	76892	1	Plastic Cap
26	50017502	1	Kit Collar For Yoke 1-3/4"

50054513SP C.V. Driveshaft
Input : 1-3/8" – 21 Spline, ASAE Size 5
Manufactured by Comer / EG
12715 & 12710 (1000 RPM Models)

REF. NO.	PART NO.	QTY.	DESCRIPTION
1	50017503	1	Complete Collar Yoke
2	50056400	2	Cross Journal Set
3	76335	3	Grease Nipple
4	76357	1	Wide Angle Double Yoke
5	76896	1	Outer Yoke
6	67108	1	Roll Pin For Outer Tube
7	76897	1	Wiper
8	76903	1	Complete Outer Tube
9	50056401	1	Cross Journal Set
10	76239BH	1	Complete Yoke
11	76362	6	Screw Kit
12	50056402	1	Bearing Ring
13	50056403	1	Guard Retaing Collar for Outer Tube
14	50056404	6	Bolt
15	50056405	1	Guard Retaining Collar for Inner Tube
16	50056406	1	Guard Cone Set
17	50056407	1	Complete Guard w/Inst. Man.
18	76247	1	Tapered Pin Set 1-3/4"
19	50056408	1	Female Tube w/ Yoke & Lube System
20	50056409	1	Male Tube w/ Yoke & Lube System
21	50056412	1	Half Female Shaft w/ Guarding
22	50056413	1	Half Male Shaft w/ Guarding
23	78786	1	Danger Decal for Outer Tube
24	78608	1	Danger Decal for Outer Guard Tube
25	76899	1	Plastic Cap
26	50017480	1	Kit Collar For Yoke 1-3/8"

© 2012 Alamo Group Inc.

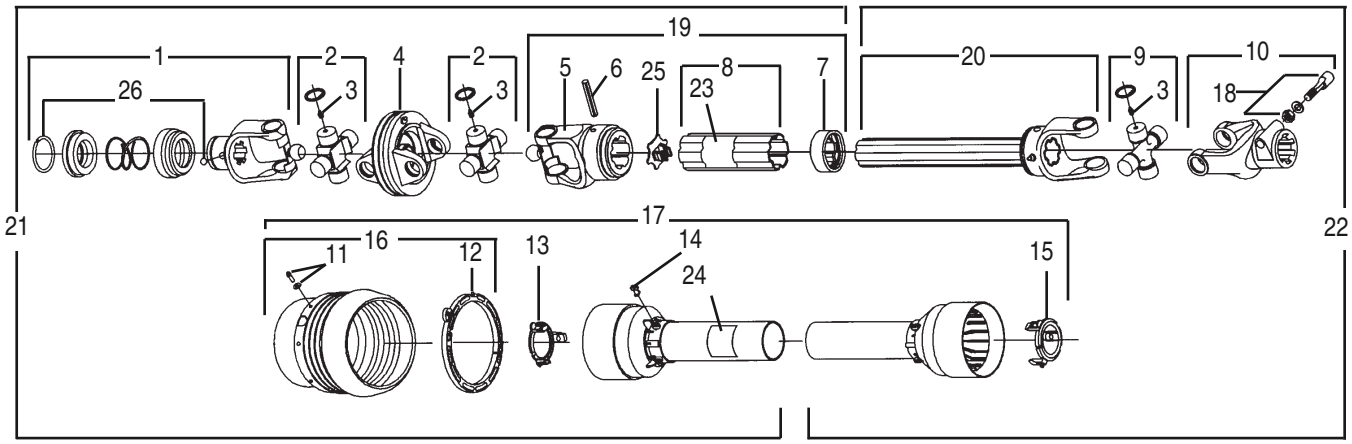

50054670SP C.V. Driveshaft
Input : 1-3/4" – 20 Spline, ASAE Size 5
Manufactured by Comer / EG
12715 & 12710 (1000 RPM Models)

REF. NO.	PART NO.	QTY.	DESCRIPTION
1	50056927	1	Complete Collar Yoke (Tractor)
2	50056400	2	Cross Journal Set
3	76335	3	Grease Nipple
4	76357	1	Wide Angle Double Yoke
5	76896	1	Outer Yoke
6	67108	1	Roll Pin For Outer Tube
7	76897	1	Wiper
8	76903	1	Complete Outer Tube
9	50056401	1	Cross Journal Set
10	76239BH	1	Complete Yoke
11	76362	6	Screw Kit
12	50056402	1	Bearing Ring
13	50056403	1	Guard Retaing Collar for Outer Tube
14	50056404	6	Bolt
15	50056405	1	Guard Retaining Collar for Inner Tube
16	50056406	1	Guard Cone Set
17	50056407	1	Complete Guard w/Inst. Man.
18	76247	1	Tapered Pin Set 1-3/4"
19	50056408	1	Female Tube w/ Yoke & Lube System
20	50056409	1	Male Tube w/ Yoke & Lube System
21	———	1	Half Female Shaft w/ Guarding
22	50056413	1	Half Male Shaft w/ Guarding
23	78786	1	Danger Decal for Outer Tube
24	78608	1	Danger Decal for Outer Guard Tube
25	76899	1	Plastic Cap
26	50017502	1	Kit Collar For Yoke 1-3/4"

© 2012 Alamo Group Inc.

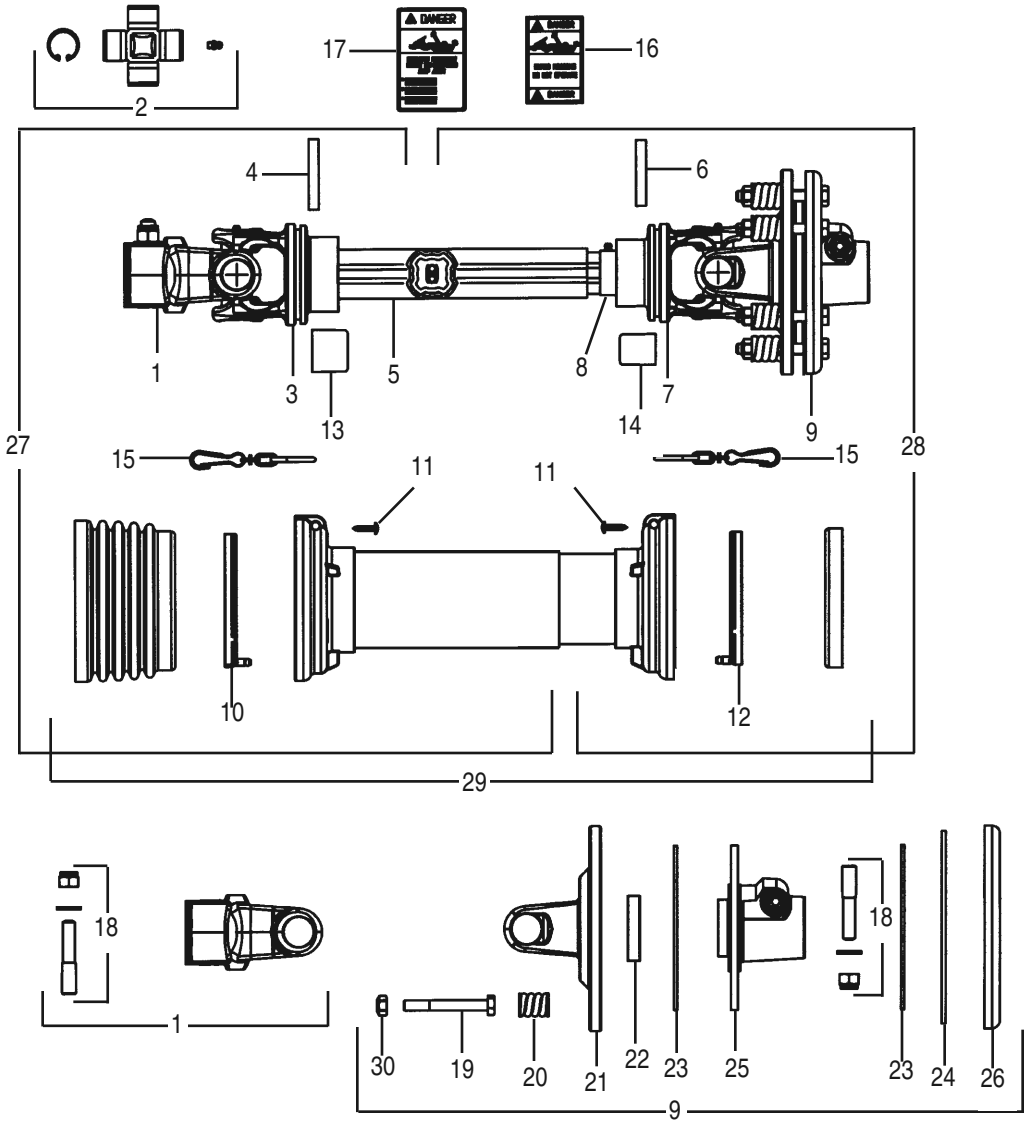

50048807 WING DRIVESHAFT

Input : 1-3/4" – 20 Spline, ASAE Size 4
Mfd. by BONDIOLI & PAVESI
2715 & 2710 (540 RPM Models)
12715 & 12710 (1000 RPM Models)

REF. NO.	PART NO.	QTY.	DESCRIPTION
1	50053712	1	Yoke, 1-3/4" -20 Spline
2	71420	2	Cross Kit
3	50056445	1	Yoke S6 Outer Tube 4-Lube
4	71397	1	Flexible Roll Pin #5 Outer 10 x 70
5	50056446	1	Drive Tube S7 Outer
6	71418	1	Flexible Roll Pin #5 Outer 10 x 70
7	71419	1	Yoke S6 Inner Tube 4-Lube
8	50056447	1	Drive Tube S7 Inner w/Grease Sys.
9	50056448	1	FFY42/S6 Clutch 1-3/4" Z20
10	50053711	1	Sheild Support SFT Outer
11	71404	6	Self Tapping Screw
12	71402	1	Sheild Support SFT Inner
13	50056449	1	Outer Tube Plug S8
14	50056450	1	Inner Tube Plug S7
15	50053707	2	Shield Chains
16	78786	1	Danger Label-Outer Drive Tube
17	78608	1	Danger/Shield Label
18	50053705	2	Taper Pin Kit 1-3/4" (3 Pins)
19	44155BH	8	Capscrew M10 x 1.5 x 85
20	50056451	8	Coil Spring FF Clutch 7mm Dia.
21	50056452	1	Flanged Yoke
22	64828	1	Clutch Bushing
23	50056453	1	Lining 162 x 85 x 3.2
24	50056454	1	Inner Plate
25	50056455	1	Splined Hub 1-3/4 -20 Spline
26	64641	1	Clutch Pressure Plate
27	50056456	1	Half Shaft Outer (Shielded)
28	50056457	1	Half Shaft Inner (Shielded)
29	50056458	1	Complete Shield
30	44154BH	8	Locknut M10 x 1.5

© 2012 Alamo Group Inc.

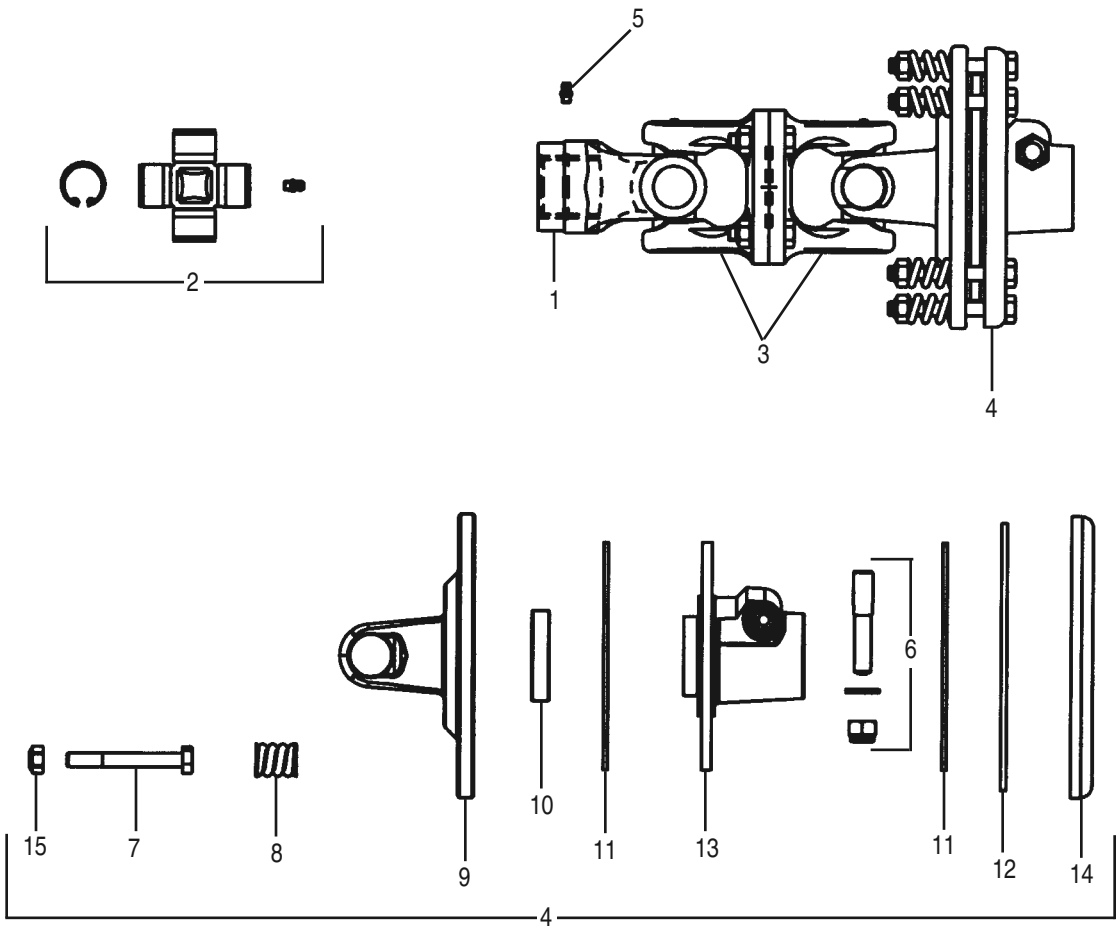

71528 CENTER DRIVESHAFT
Input : 1-3/4" – 20 Spline, ASAE Size 4
Mfd. by BONDIOLI & PAVESI
2715 & 2710 (540 RPM Models)
12715 & 12710 (1000 RPM Models)

REF. NO.	PART NO.	QTY.	DESCRIPTION
1	50056459	1	Yoke, 1-3/4" -20 Spline
2	71420	2	Cross Kit
3	50056460	1	Double Flange Yoke
4	50056461	1	FFV42/5 Clutch 1-3/4" Z20
5	63946	1	Grease Fitting M6 x 1
6	50053705	1	Tapered Pin
7	44155BH	8	Crapscrew M10 x 1.5 x 85
8	50056451	8	Coil Spring FF Clutch 7mm Dia.
9	50056452	1	Flanged Yoke
10	64828	1	Clutch Bushing
11	50056453	1	Lining 162 x 85 x 3.2
12	50056454	1	Inner Plate
13	50056462	1	Clutch Hub 1-3/4 -20 Spline
14	64641	1	Clutch Pressure Plate
15	44154BH	8	Locknut M10 x 1.5

© 2012 Alamo Group Inc.

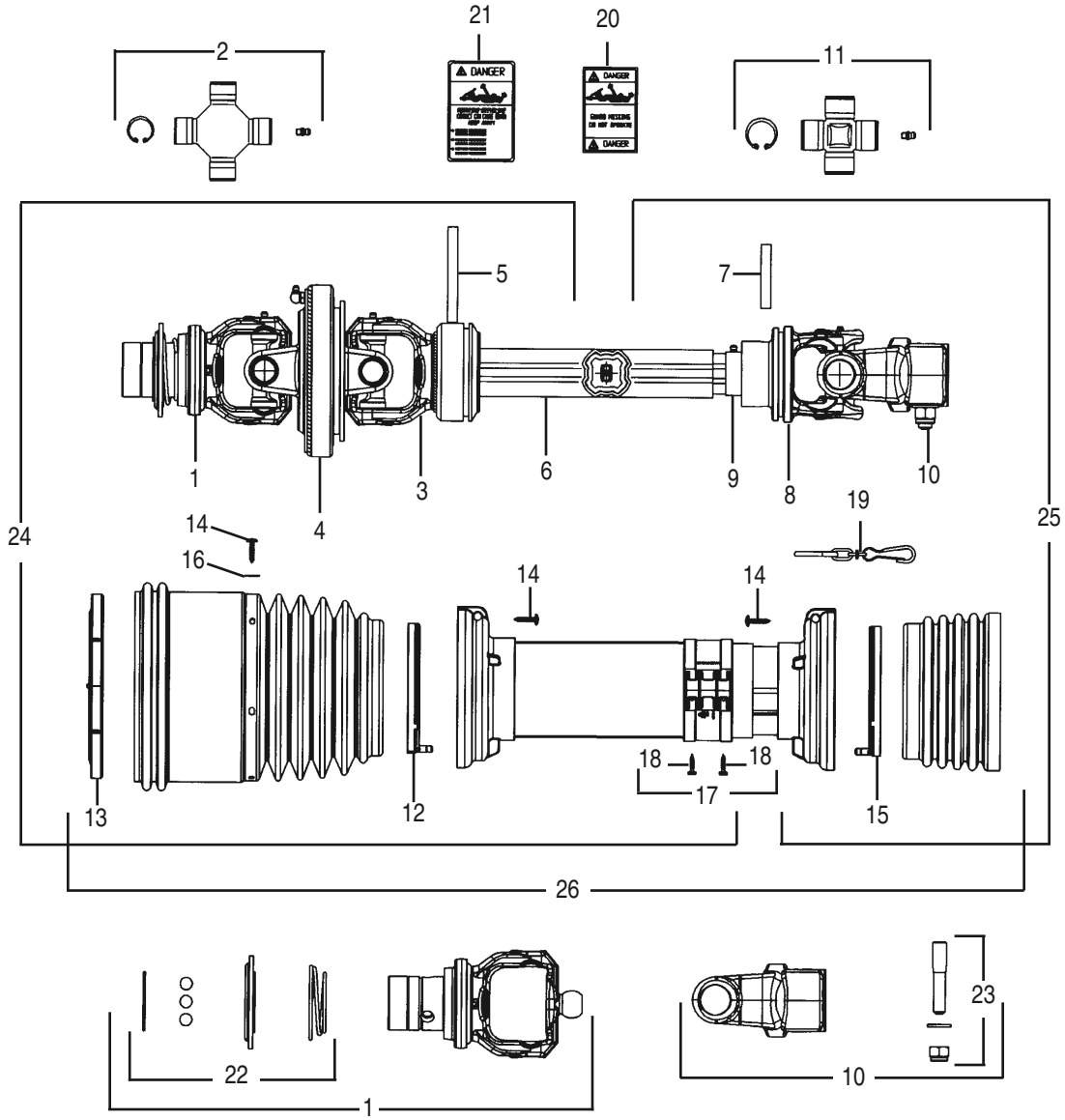

50053303SP CV DRIVESHAFT ASSEMBLY

1-3/8"x 21 SPLINE TRACTOR YOKE
ASAE SIZE 4
MANUFACTURED BY BONDIOLI & PAVESI
12715 & 12710 (1000 RPM Models)

REF. NO.	PART NO.	QTY.	DESCRIPTION
1	50053719	1	Yoke, CV 1-3/8" -21 Spline (Tractor)
2	50053718	1	Cross Kit
3	50053717	1	Tube Yoke SFT
4	50053716	1	Central Body
5	50053715	1	Roll Pin 10 x 95 DIN 1481
6	50053698	1	Drive Tube Outer S6
7	71418	1	Flexible Roll Pin #6/7 Inner 10 x 65
8	71419	1	Tube Yoke S6 I. 4-Lobe
9	50053697	1	Drive Tube S6 Inner
10	50053712	1	Yoke SFT S6 1-3/4 Z20 Taper Pin
11	71420	1	Cross Kit
12	50053711	1	Sheild Support SFT Outer
13	50053710	1	Sheild Support

REF. NO.	PART NO.	QTY.	DESCRIPTION
14	71404	12	Self Tapping Screw
15	71402	1	Sheild Support SFT Inner
16	50053709	6	Washer
17	71447	1	Single Chain Restraint Collar
18	50053708	2	Screw
19	50053707	1	Shield Chain
20	78786	1	Danger Label-Outer Drive Tube
21	78608	1	Danger/Shield Label
22	50053721	1	Ball Collar Kit 1-3/8"
23	50053705	1	Taper Pin Kit 1-3/4" (3 Pins)
24	50053701	1	Half Shaft S6 Inner (Shielded)
25	50053700	1	Half Shaft S6 Outer (Shielded)
26	50053699	1	Complete Shield

© 2012 Alamo Group Inc.

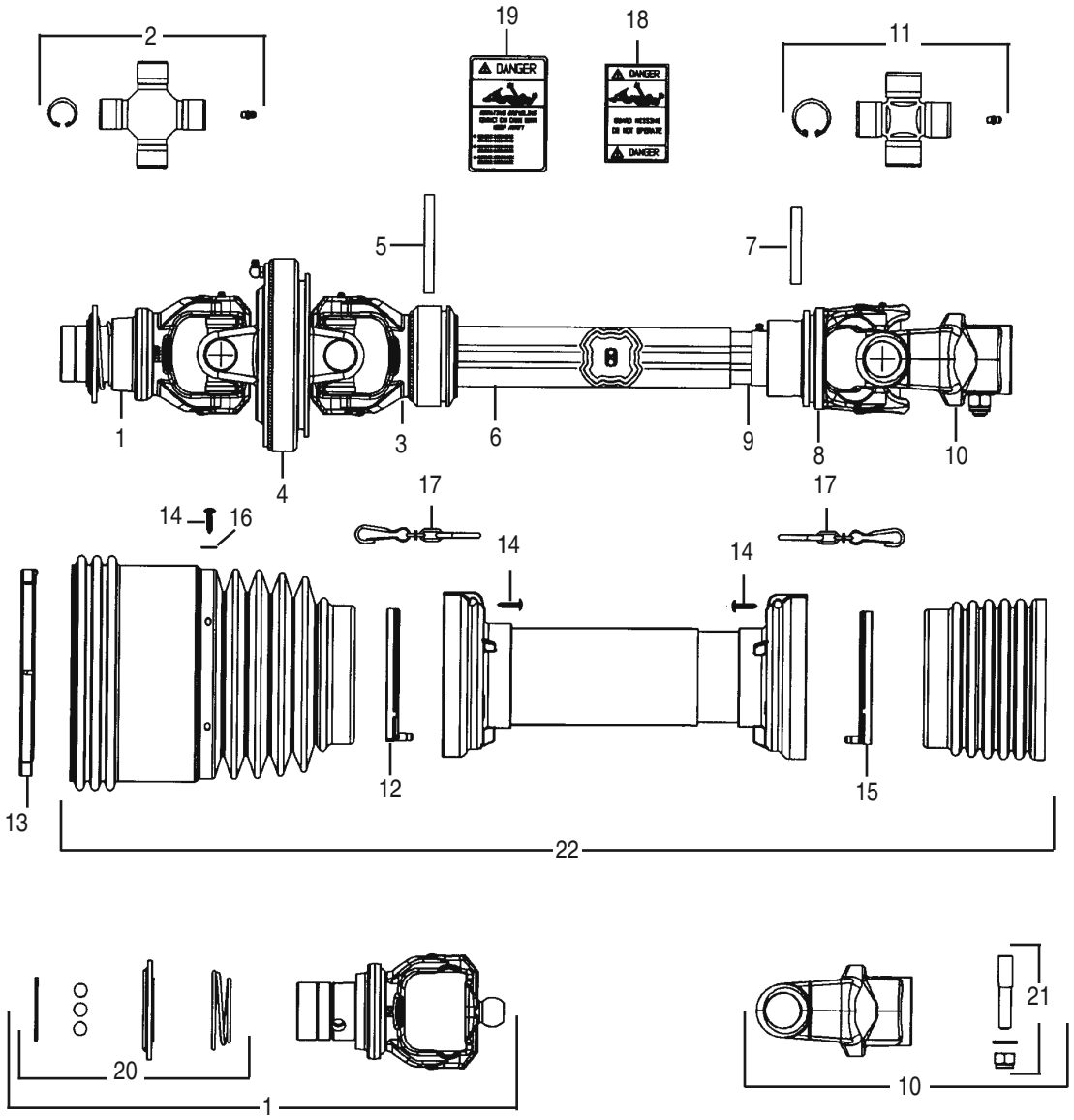

50053304SP CV DRIVESHAFT ASSEMBLY
1-3/8"x 6 SPLINE TRACTOR YOKE
ASAE SIZE 5
MANUFACTURED BY BONDIOLI & PAVESI
2715 & 2710 (540 RPM Models)
(Replaced by 50069764SP)

REF. NO.	PART NO.	QTY.	DESCRIPTION
1	50053678	1	Yoke, CV 1-3/8" -6 Spline (Tractor)
2	50053677	2	Cross Kit
3	50053691	1	Tube Yoke S8 CV Outer
4	50053727	1	Central Body
5	50053715	1	Roll Pin 10 x 95 DIN 1481
6	50053690	1	Drive Tube Outer H8
7	66866	1	Flexible Roll Pin #6/7 Outer 10 x 75
8	50053689	1	Tube Yoke S8 Inner
9	50053688	1	Drive Tube H8 Inner
10	50053723	1	Yoke SFT S8 1-3/4 Z20 Taper Pin
11	71399	1	Cross Journal
12	50053711	1	Sheild Support SFT Outer
13	50053722	1	Sheild Support SFT EL CV80
14	71404	12	Self Tapping Screw
15	71402	1	Sheild Support SFT Inner
16	50053709	6	Washer
17	50053707	2	Shield Chains
18	78786	1	Danger Label-Outer Drive Tube
19	78608	1	Danger/Shield Label
20	50053721	1	Ball Collar Kit 1-3/8"
21	50053705	1	Taper Pin Kit 1-3/4" (3 Pins)
22	50053687	1	Complete Shield

© 2012 Alamo Group Inc.

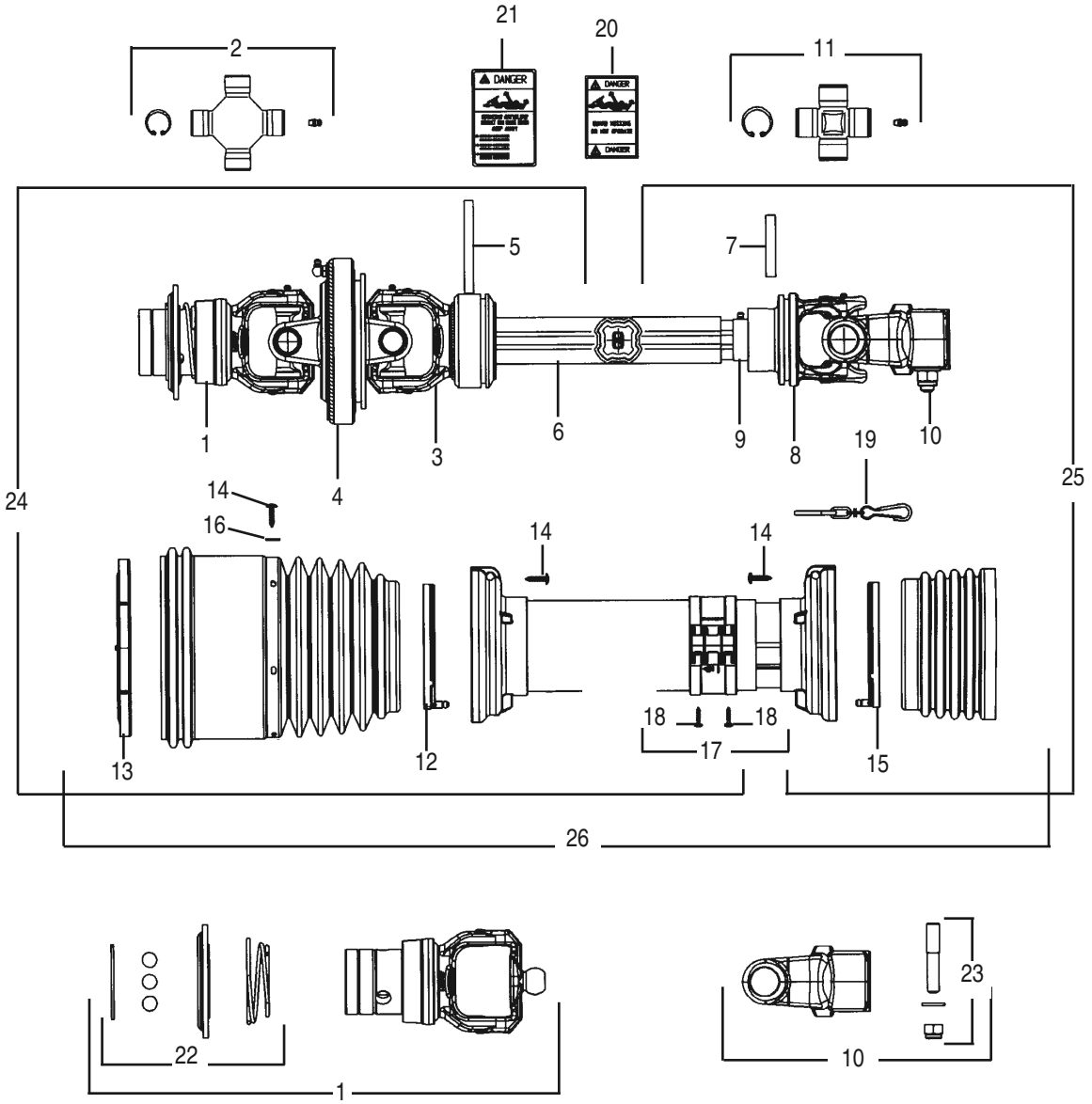

50053305SP CV DRIVESHAFT ASSEMBLY
1-3/4"x 20 SPLINE TRACTOR YOKE
ASAE SIZE 4
MANUFACTURED BY BONDIOLI & PAVESI
12715 & 12710 (1000 RPM Models)

REF. NO.	PART NO.	QTY.	DESCRIPTION
1	50053720	1	Yoke, CV 1-3/4" -20 Spline (Tractor)
2	50053718	1	Cross Kit
3	50053717	1	Tube Yoke SFT
4	50053716	1	Central Body
5	50053715	1	Roll Pin 10 x 95 DIN 1481
6	50053693	1	Drive Tube Outer S6
7	71418	1	Flexible Roll Pin #6/7 Inner 10 x 65
8	71419	1	Tube Yoke S6 I. 4-Lobe
9	50053692	1	Drive Tube S6 Inner
10	50053712	1	Yoke SFT S6 1-3/4 Z20 Taper Pin
11	71420	1	Cross Kit
12	50053711	1	Sheild Support SFT Outer
13	50053710	1	Sheild Support

REF. NO.	PART NO.	QTY.	DESCRIPTION
14	71404	12	Self Tapping Screw
15	71402	1	Sheild Support SFT Inner
16	50053709	6	Washer
17	71447	1	Single Chain Restraint Collar
18	50053708	2	Screw
19	50053707	1	Shield Chain
20	78786	1	Danger Label-Outer Drive Tube
21	78608	1	Danger/Shield Label
22	50053706	1	Ball Collar Kit 1-3/4"
23	50053705	1	Taper Pin Kit 1-3/4" (3 Pins)
24	50053696	1	Half Shaft S6 Inner (Shielded)
25	50053695	1	Half Shaft S6 Outer (Shielded)
26	50053694	1	Complete Shield

© 2012 Alamo Group Inc.

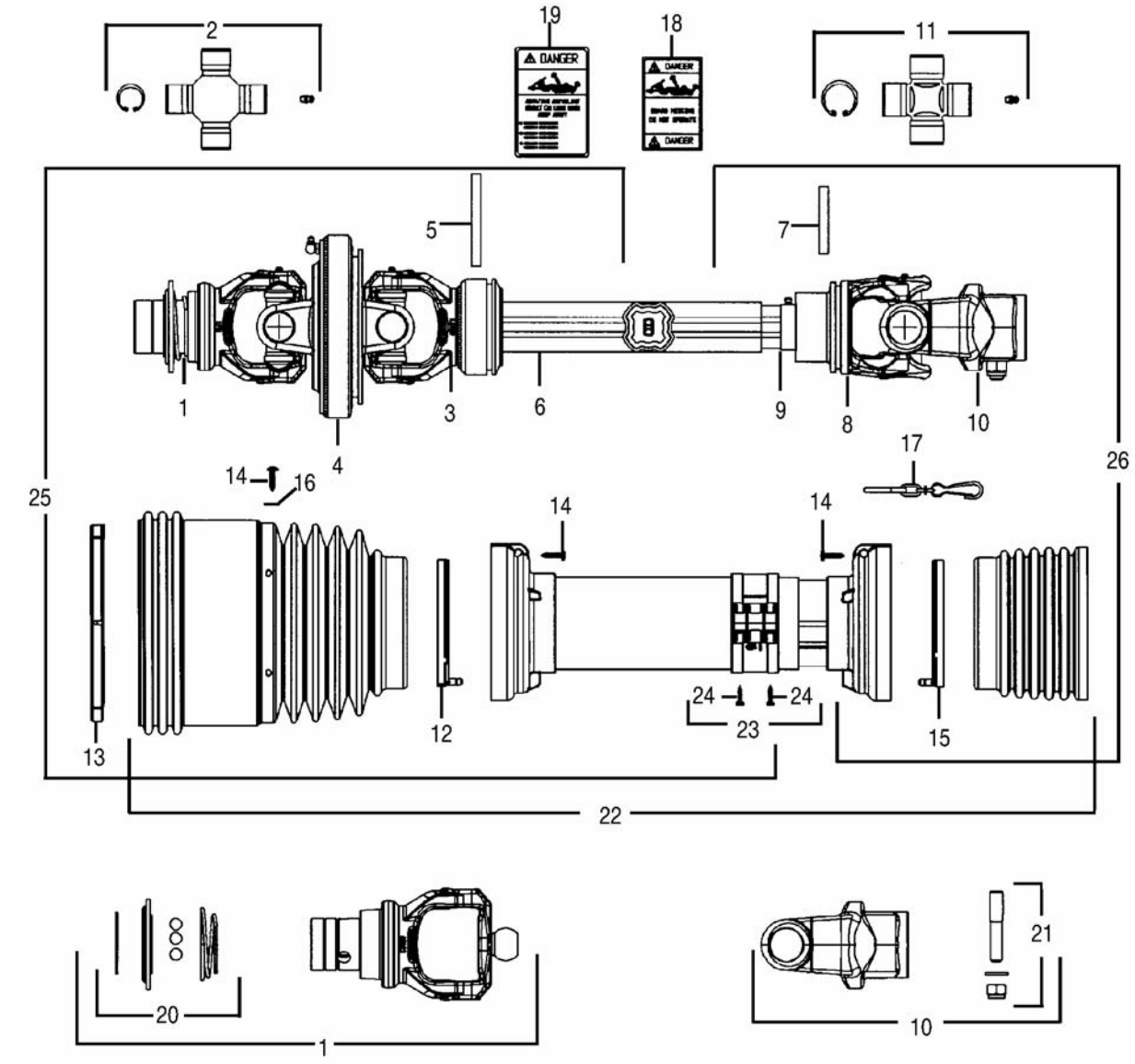

50053306SP CV DRIVESHAFT ASSEMBLY
1000 RPM, 1-3/8"x 21 SPLINE TRACTOR YOKE
ASAE SIZE 5
MANUFACTURED BY BONDIOLI & PAVESI
12715 & 12710 (1000 RPM Models)

REF. NO.	PART NO.	QTY.	DESCRIPTION
1	50053683	1	Yoke, CV 1-3/8" -21 Spline (Tractor)
2	50053677	2	Cross Kit
3	50053728	1	Tube Yoke SFT S8 EXT
4	50053727	1	Central Body
5	50053715	1	Roll Pin 10 x 95 DIN 1481
6	71394	1	Drive Tube Outer S8
7	71397	1	Flexible Roll Pin #5 Outer 10 x 70
8	71398	1	Tube Yoke S8 Inner 4-Lobe
9	50053682	1	Drive Tube S8 Inner
10	50053723	1	Yoke SFT S8 1-3/4 Z20 Taper Pin
11	71399	1	Cross Journal
12	50053711	1	Sheild Support SFT Outer
13	50053722	1	Sheild Support SFT EL CV80
14	71404	12	Self Tapping Screw
15	71402	1	Sheild Support SFT Inner
16	50053709	6	Washer
17	50053707	2	Shield Chains
18	78786	1	Danger Label-Outer Drive Tube
19	78608	1	Danger/Shield Label
20	50053721	1	Ball Collar Kit 1-3/8"
21	50053705	1	Taper Pin Kit 1-3/4" (3 Pins)
22	50053684	1	Complete Shield
23	71447	1	Single Chain Restraint Collar
24	50053708	2	Screw
25	50053686	1	Half Shaft S8 Inner (Shielded)
26	50053685	1	Half Shaft S8 Outer (Shielded)

© 2012 Alamo Group Inc.

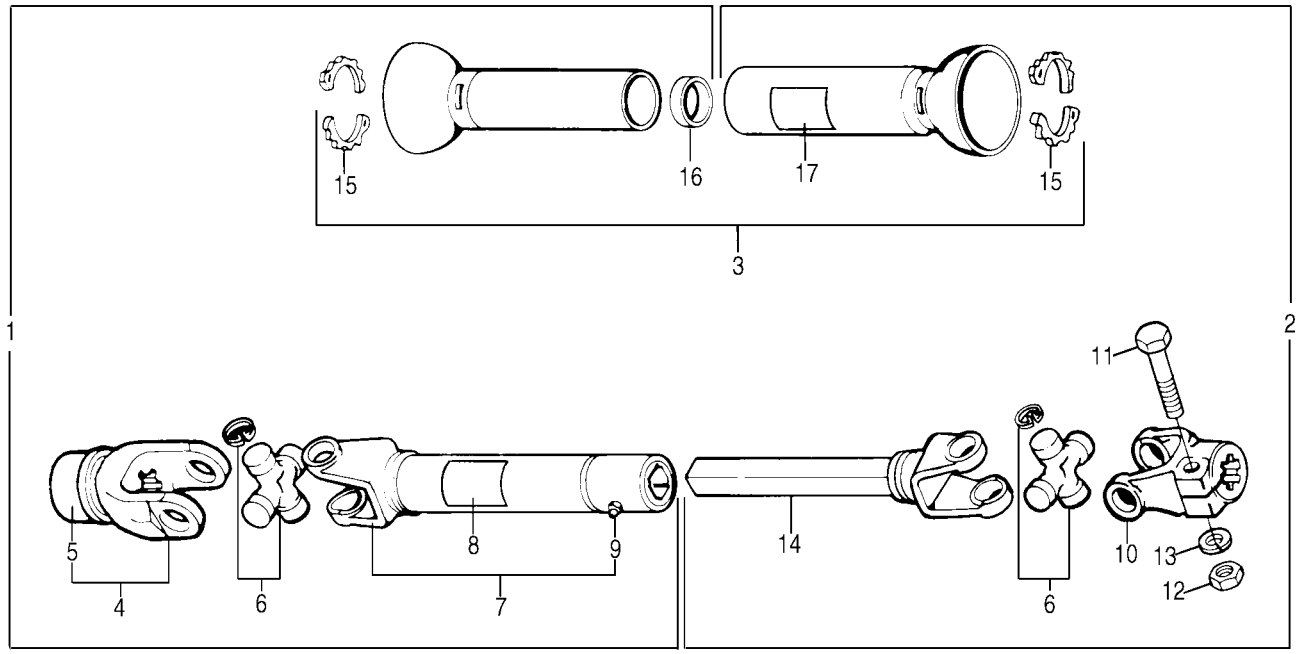

87636 DRIVESHAFT 540 RPM 1-3/8" – 6 SPLINE TRACTOR YOKE
87637 DRIVESHAFT 1000 RPM 1-3/8" – 21 SPLINE TRACTOR YOKE
87638 DRIVESHAFT 1000 RPM 1-3/4" – 20 SPLINE TRACTOR YOKE
Manufactured by Walterscheid
For 2715, 2710, 12715, 12710 Models Using Jackshaft Input

REF. NO.	PART NO.	QTY.	DESCRIPTION
1	89099	1	Tractor Half Shaft (87636)
	90001	1	Tractor Half Shaft (87637)
	90003BH	1	Tractor Half Shaft (87638)
2	90000	1	Implement Half (87636, 87637)
	90004	1	Implement Half (87638)
3	89088	1	Shield Assembly (87636)
	89089	1	Shield Assembly (87637)
	89090	1	Shield Assembly (87638)
4	87401	1	Yoke & Collar (87636)
	87397	1	Yoke & Collar (87637)
	89076	1	Yoke & Collar (87638)
5	50012426	1	Collar Kit (87636, 87637)
	50012782	1	Collar Kit (87638)
6	1294BH	2	Cross Bearing Kit
7	89069	1	Yoke & Tube (87636)
	89075	1	Yoke & Tube (87637)
	11617	1	Yoke & Tube (87638)
8	78786	1	Shield Missing Decal
9	87316	2	Grease Fitting
10	60807	1	Implement Yoke
11	11375	1	Capscrew 5/8" x 3-1/4" Gr.5
12	15563	1	Hex Nut 5/8"
13	19486	1	Lockwasher 5/8"
14	89068	1	Yoke & Bar (87636, 87637)
	11613	1	Yoke & Bar (87638)
15	1694BH	4	Shield Bearing
16	62848	1	Bearing Ring
17	78608	1	Danger Decal

© 2012 Alamo Group Inc.

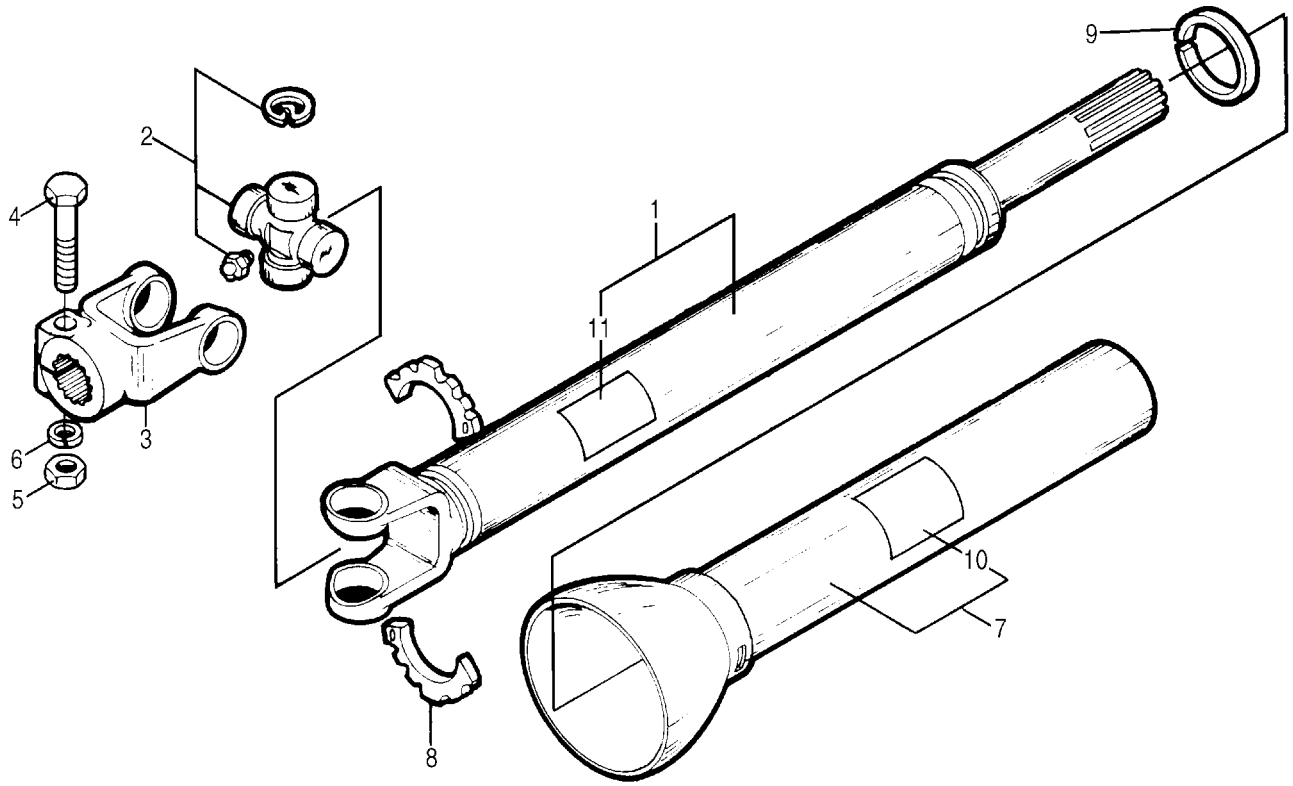

87603 JACKSHAFT ASSEMBLY
540 & 1000 RPM
For 2715, 2710, 12715 & 12710 Models
With Jackshaft Input
Manufactured by Walterscheid

REF. NO.	PART NO.	QTY.	DESCRIPTION
1	89070	1	Stub Shaft, Tube & Yoke Weld.
2	1294BH	1	Cross Bearing Kit
3	60807	1	Yoke 1 3/4" - 20 Spline
4	19011	1	Capscrew 5/8" x 3 1/4" Gr.5
5	15563	1	Hex Nut 5/8"
6	19486	1	Lockwasher 5/8"
7	89071	1	Shield Assy.
8	1694BH	2	Shield Bearing
9	62848	1	Support Bearing
10	78608	1	Danger Decal
11	78786	1	Danger Decal

© 2012 Alamo Group Inc.

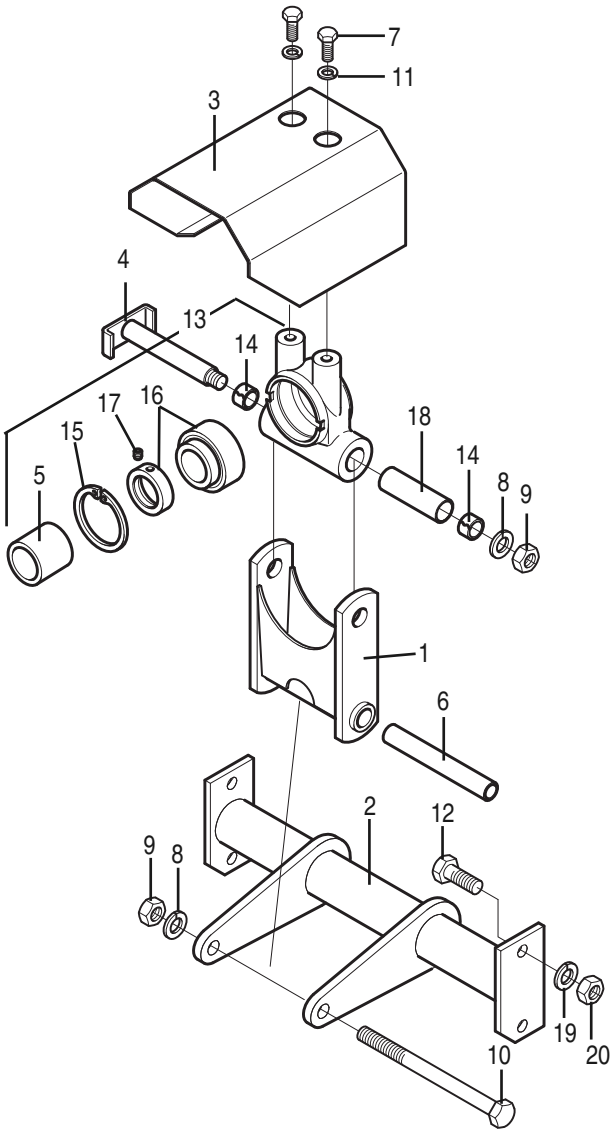

PILLOW BLOCK BEARING & MOUNT
2715, 2710, 12715, 12710 Models w/ Jackshaft Driveline

REF. NO.	PART NO.	QTY.	DESCRIPTION
1	87613	1	Spacer Weld.
2	50054483	1	Mount Weld.
3	88100	1	Shield
4	88927	1	Pin Weld.
5	87708	1	Spacer
6	87609	1	Pivot Spacer
7	——	2	Capscrew 1/2” x 1 1/4” Gr.5
8	——	2	Lockwasher 3/4”
9	9162400	2	Locknut 3/4”
10	44182	1	Capscrew 3/4” x 9 1/2” Gr.5
11	——	2	Lockwasher 1/2”
12	——	4	Capscrew 5/8” x 2” Gr.5
13	90986	1	Pillow Block Bearing (14–18)
14	88916	2	Tension Bushing
15	77492	1	Snap Ring
16	77491	1	Bearing w/Collar
17	88840	1	Set Screw
18	90983	1	Spacer
19	——	4	Lockwasher 5/8”
20	——	4	Locknut 5/8”

© 2012 Alamo Group Inc.

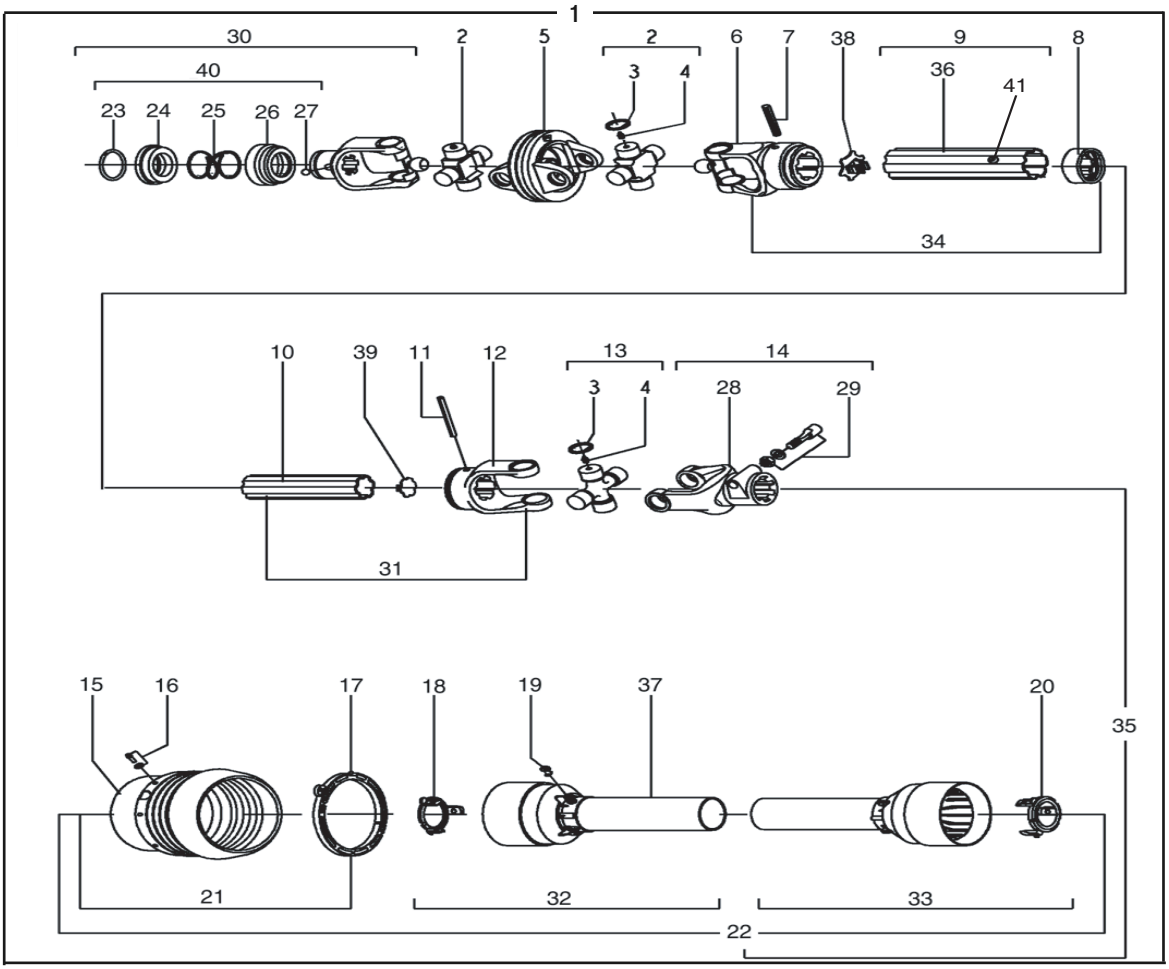

50069764SP C.V. Driveshaft
Input : 1-3/8" – 6 Spline, ASAE Size 5
Manufactured by Comer / EG
2820 (540 RPM Models)
(Replaces 50054510SP & 50053304SP)

REF. NO.	PART NO.	DESCRIPTION	QTY.	REF. NO.	PART NO.	DESCRIPTION	QTY.
1	**50069764SP**	**Driveshaft Assembly**	**1**	21	50056406	Guard Cone Set	1
2	50056400	Cross Journal Set	2	22	50071245	Complete Guard w/Inst. Manual	1
3	------	Circlip	12	23	------	Outer Circlip	1
4	76335	Grease Nipple	3	24	------	Sliding Sleeve Collar	1
5	76357	Wide Angle Double Yoke	1	25	------	Spring	1
6	76896	Outer Yoke	1	26	------	Fixed Sleeve	1
7	67108	Roll Pin - Outer & Inner Tube	1	27	------	Ball, 1/2"	3
8	76897	Wiper	1	28	------	Yoke (See Item 14)	1
9	50071242	Complete Outer Tube	1	29	76247	Tapered Pin Set 1-3/4"	1
10	50071243	Inner Tube	1	30	50017504	Yoke Assy. 1-3/8 - 6 Spline	1
11	67085	Roll Pin For Inner Tube	1	31	------	Male Tube w/Yoke	1
12	50071244	Inner Yoke	1	32	------	Half Female Guarding w/Label	1
13	50056401	Cross Journal Set	1	33	------	Half Male Guarding (See Item 22)	1
14	76239BH	Complete Yoke	1	34	------	Female Shaft (See Item 1)	1
15	------	Guard Cone	1	35	50071246	Half Male Shaft w/Guarding	1
16	76362	Screw Kit	6	36	78786	Decal, Danger - Outer Tube	1
17	50056402	Bearing Ring	1	37	78608	Decal, Danger - Outer Guard Tube	1
18	50056403	Guard Ret. Collar - Outer Tube	1	38	76899	Plastic Cap - Outer Tube	1
19	50056404	Bolt	6	39	50071247	Plastic Cap - Inner Tube	1
20	50056405	Guard Ret. Collar - Inner Tube	1	40	50017480	Kit Collar For Yoke 1-3/8"	1
				41	50075570	Grease Fitting	1

© 2012 Alamo Group Inc.

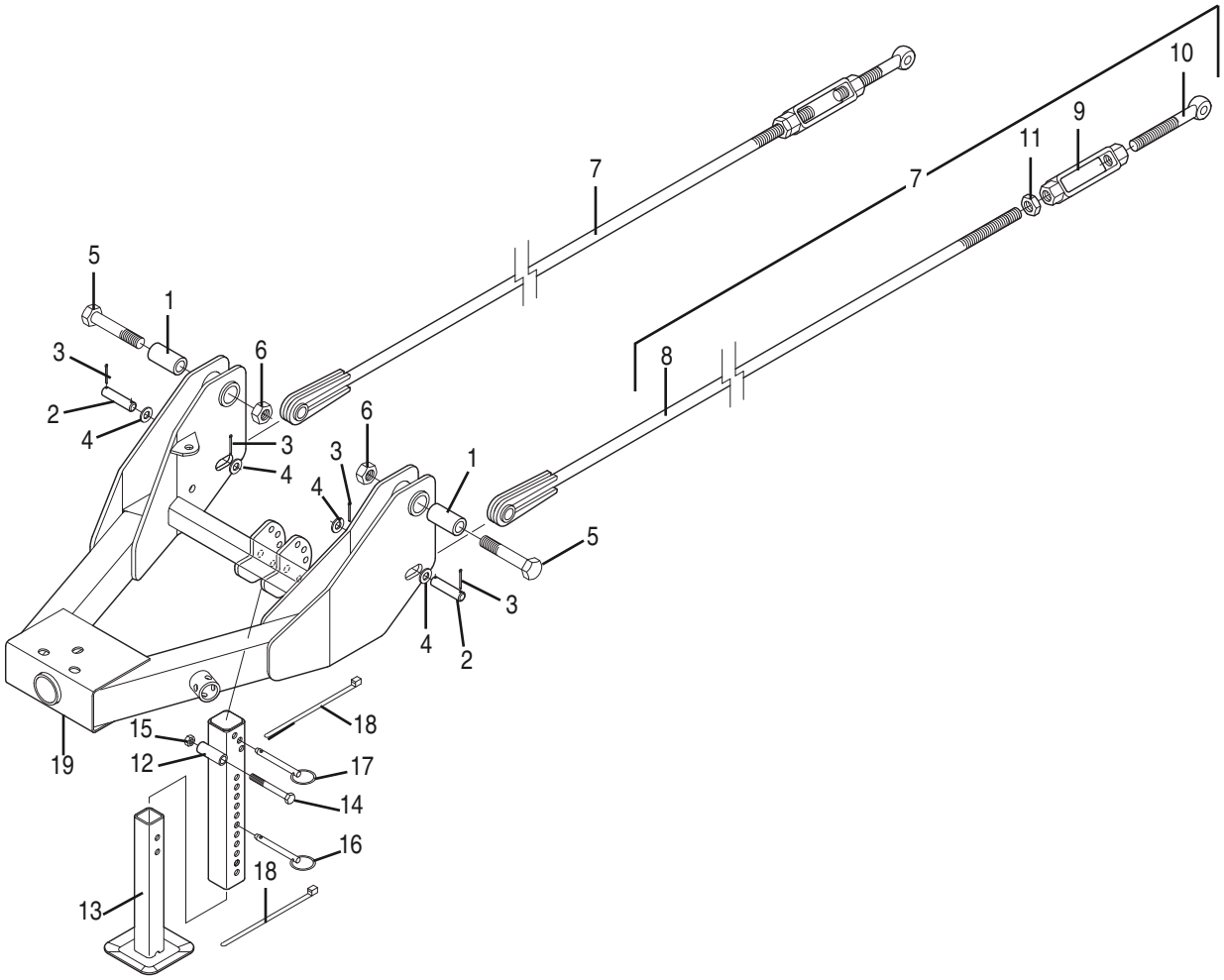

(OLD STYLE)
TONGUE, LEVELING ROD & RELATED PARTS
For 2715, 2710, 12715 & 12710 MODELS

REF. NO.	PART NO.	QTY.	DESCRIPTION
1	50054456	2	Sleeve Bushing
2	50054389	2	Clevis Pin
3	20167	4	Cotter Pin 3/16" x 2"
4	20376	4	Flatwasher 1" SAE
5	19137	2	Capscrew 1" x 5 1/2"
6	9163200	2	Locknut 1"
7	50054463	2	Leveling Rod Assy.
8	50054461	1	Rod Weld.
9	53053BH	1	Turnbuckle
10	60636	1	Turnbuckle End
11	15612	1	Hex Jam Nut
12	50054393	1	Base Tube Weldment
13	50054421	1	Slide Tube Weldment
14	——	1	Capscrew 5/8" x 4-1/2"
15	15598BH	1	Locknut 5/8"
16	25H44543	1	Pin, 1/2" Ball Check
17	7250018	1	Pin, 1/2" Ball Check
18	52161BH	2	Cable Tie
19	50054424	1	Tongue Weldment

© 2012 Alamo Group Inc.

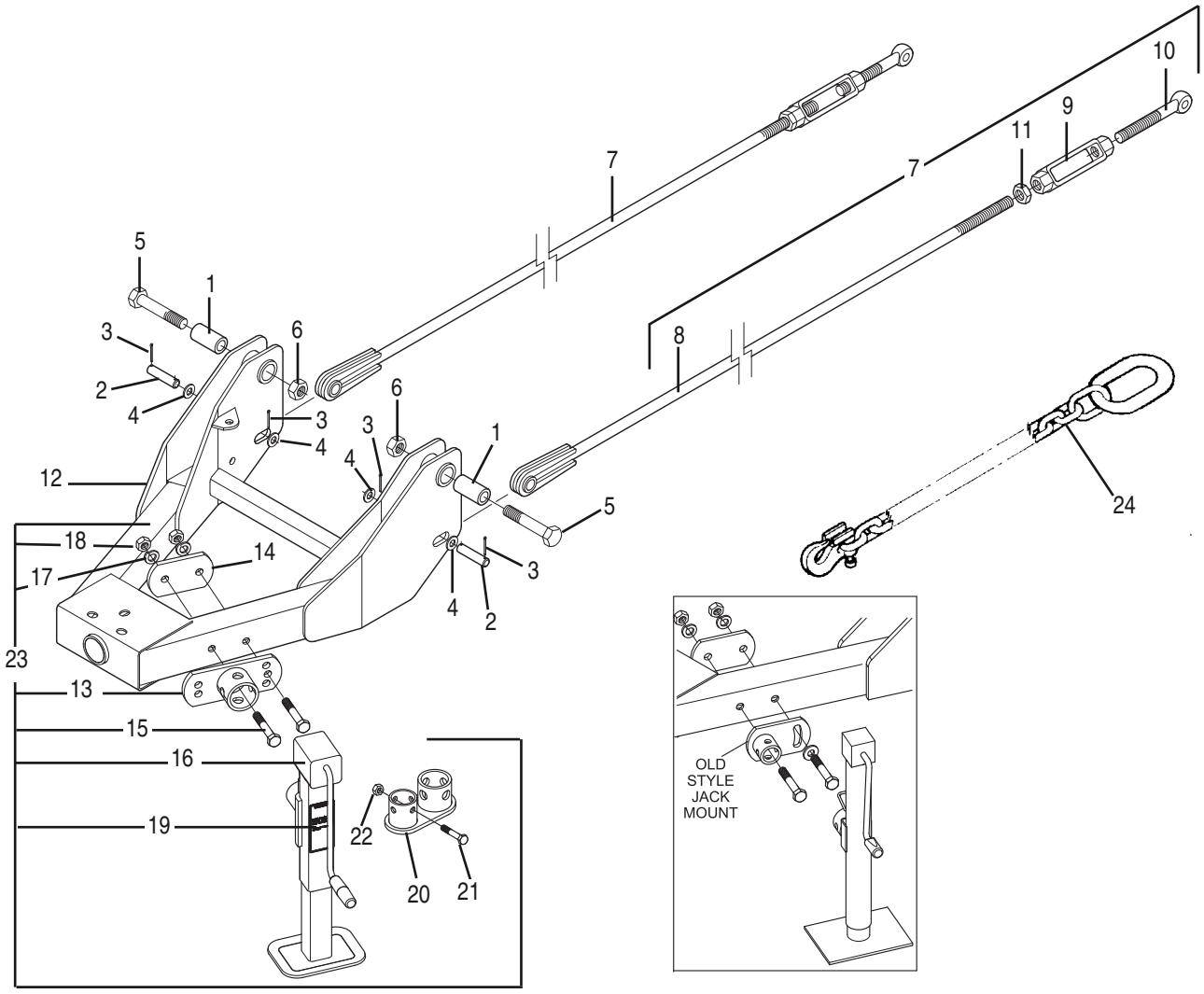

NOTE: If your machine has the Old Style Jack Mount like the illustration above, to replace the Jack or the Mount you must order item 23, 50070169 Jack Mount Kit.

TONGUE, LEVELING ROD & RELATED PARTS
For 2715, 2710, 12715 & 12710 MODELS
(FOR EARLIER VERSIONS)

REF. NO.	PART NO.	QTY.	DESCRIPTION
1	50054456	2	Sleeve Bushing
2	50054389	2	Clevis Pin
3	20167	4	Cotter Pin 3/16" x 2"
4	20376	4	Flatwasher 1" SAE
5	19137	2	Capscrew 1" x 5 1/2"
6	9163200	2	Locknut 1"
7	50054463	2	Leveling Rod Assy.
8	50054461	1	Rod Weld.
9	53053BH	1	Turnbuckle
10	60636	1	Turnbuckle End
11	15612	1	Hex Jam Nut
12	50054726	1	Tongue Weldment
13	50069930	1	Adjustable Mount (5 Position)
14	50031362	1	Mount Pad
15	——	2	Capscrew 5/8" x 5"
16	50070199	1	Jack Assembly
17	——	2	Lockwasher 5/8"
18	——	2	Hex Nut 5/8"
19	D762	1	Decal, Warning
20	50069933	1	Jack Storage Adaptor
21	——	1	Capscrew 1/2" x 3-1/4"Gr.5
22	——	1	Locknut 1/2"
23	50070169	1	Jackmount Kit
24	91074	1	Safety Tow Chain

© 2012 Alamo Group Inc.

TONGUE, LEVELING ROD & RELATED PARTS FOR 2715, 2710, 12715 & 12710 MODELS (CURRENT STYLE)

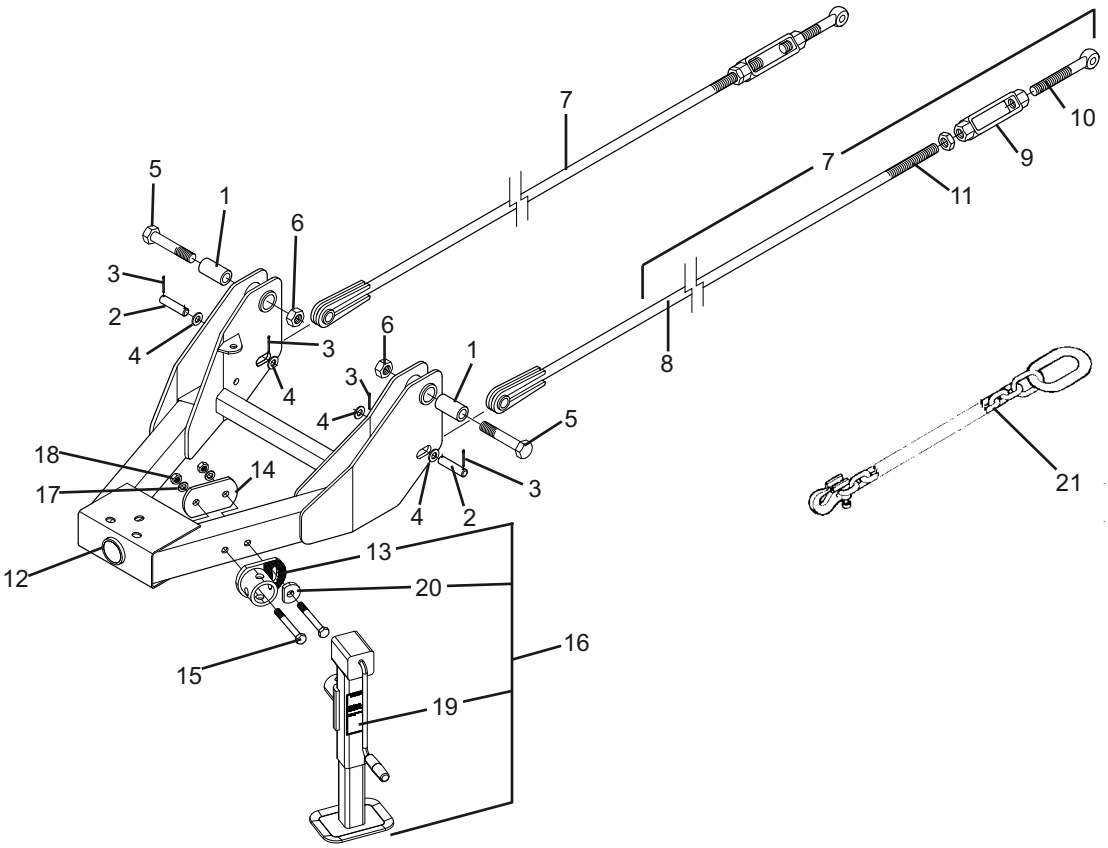

REF. NO.	PART NO.	DESCRIPTION	QTY.
1	50054456	Sleeve Bushing	2
2	50054389	Clevis Pin	2
3	20167	Cotter Pin, 3/16” x 2”	4
4	------	Flatwasher, 1” SAE	4
5	------	Capscrew, 1” x 5-1/2”	2
6	------	Locknut, 1”	2
7	50054463	Leveling Rod Assy	2
8	50054461	Rod Weldment	1
9	53053BH	Turnbuckle	1
10	60636	Turnbuckle End	1
11	15612	Hex Jam Nut	1
12	50069924	Tongue Weldment	1
13	00779360	Bracket, Jack Weldment	1
14	50069926	Mount Pad	1
15	------	Capscrew, 3/4” x 5”	2
16	00779350	Jackstand Assy (Included Items 13, 19 & 20)	1
17	------	Lockwasher, 3/4”	2
18	------	Hex Nut, 3/4”	2
19	D482	Decal, Warning	1
20	00779361	Washer, Jack	1
21	91074	Safety Tow Chain	1

© 2012 Alamo Group Inc.

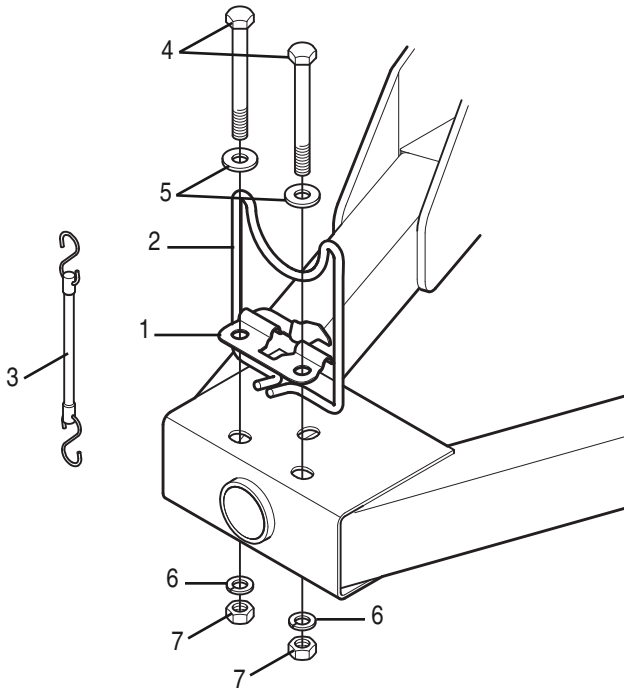

DRIVELINE HOLDER ASSEMBLY
For 2715, 2710, 12715 & 12710 Models

REF. NO.	PART NO.	DESCRIPTION	QTY.
1	50054710	Mounting Bracket Weld.	1
2	50054711	Formed Driveline Holder	1
3	50060002	Tie-Down Strap	1
4	-------	Capscrew 5/8" x 6"	2
5	20748	Flatwasher 5/8" SAE	2
6	-------	Lockwasher 5/8"	2
7	-------	Hex Nut 5/8"	2
8	-------	Instruction Sheet (50080870)	1

© 2012 Alamo Group Inc.

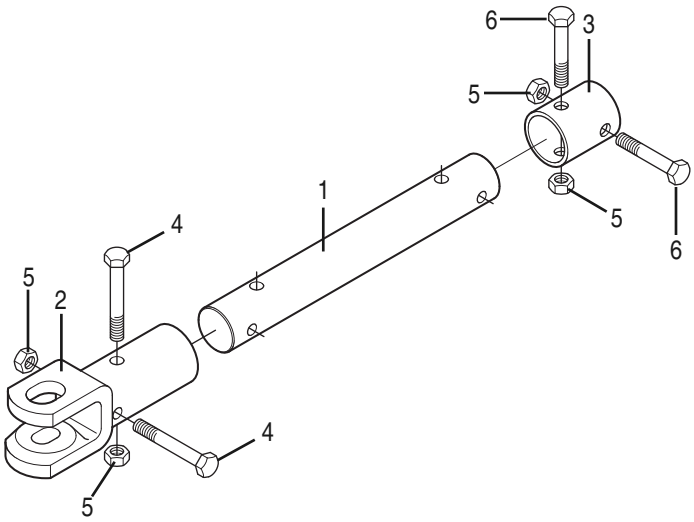

50054574
CLEVIS HITCH ASSEMBLY
For 2715, 2710, 12715 & 12710 Models

REF. NO.	PART NO.	QTY.	DESCRIPTION
1	50052790	1	Clevis Pin
2	88567	1	Clevis Hitch Machined
3	86356	1	Clevis Pin Collar
4	——	2	Capscrew 5/8” x 4-1/2” Gr.5
5	15598BH	4	Locknut 5/8”
6	——	2	Capscrew 5/8” x 3-3/4” Gr.5

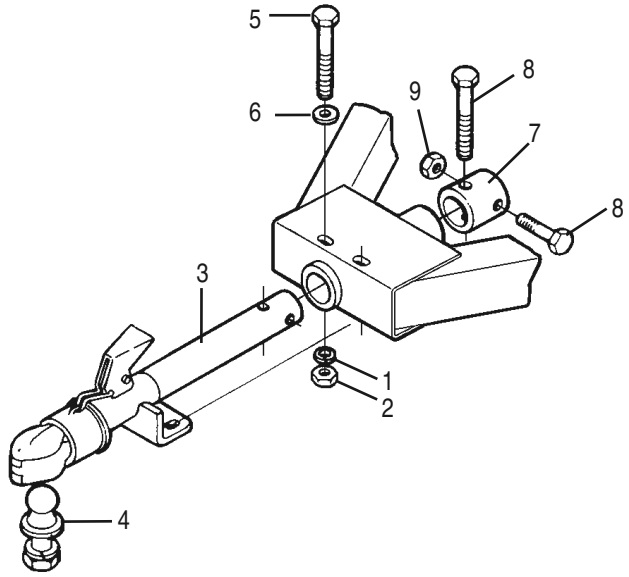

50054572
BALL HITCH & BALL ASSEMBLY
For 2715, 2710, 12715 & 12710 Models

REF. NO.	PART NO.	QTY.	DESCRIPTION
1	——	2	Lockwasher 5/8”
2	——	2	Hex Nut 5/8”
3	50054618	1	Ball Hitch Weldment
4	81621	1	2” Ball Assembly
5	——	2	Capscrew 5/8” x 6” Gr.5
6	——	2	Flatwasher 5/8”
7	86356	1	Collar
8	——	2	Capscrew 5/8” x 3-3/4” Gr.5
9	15516	2	Locknut 5/8”

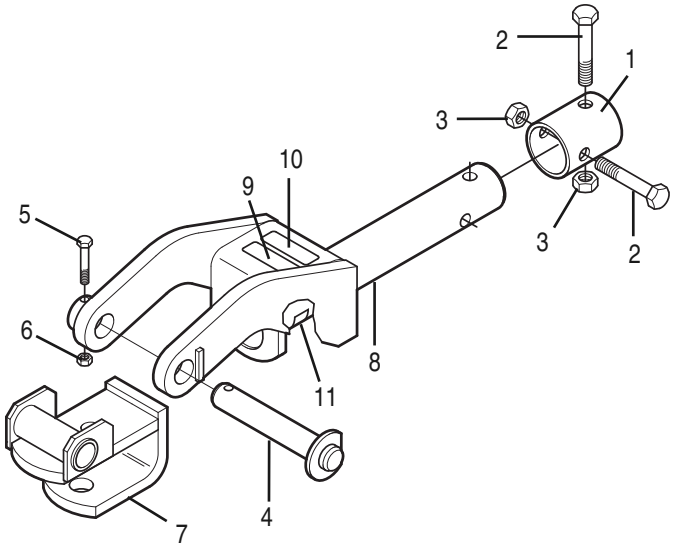

50054505SP
SWIVEL PIVOT HITCH ASSEMBLY
For 2715, 2710, 12715 & 12710 Models

REF. NO.	PART NO.	QTY.	DESCRIPTION
1	86356	1	Collar
2	——	2	Capscrew 5/8” x 3-3/4” Gr.5
3	15598BH	2	Locknut 5/8”
4	50055486	1	Pin Weldment
5	——	1	Capscrew 3/8” x 2-1/4” Gr.5
6	9131200	1	Locknut 3/8”
7	50080681	1	Clevis Assembly
8	50055447	1	Hitch Weldment
9	50035874	1	Direction Decal
10	97692	1	Patent Decal
11	50045639	1	Direction Decal

© 2012 Alamo Group Inc.

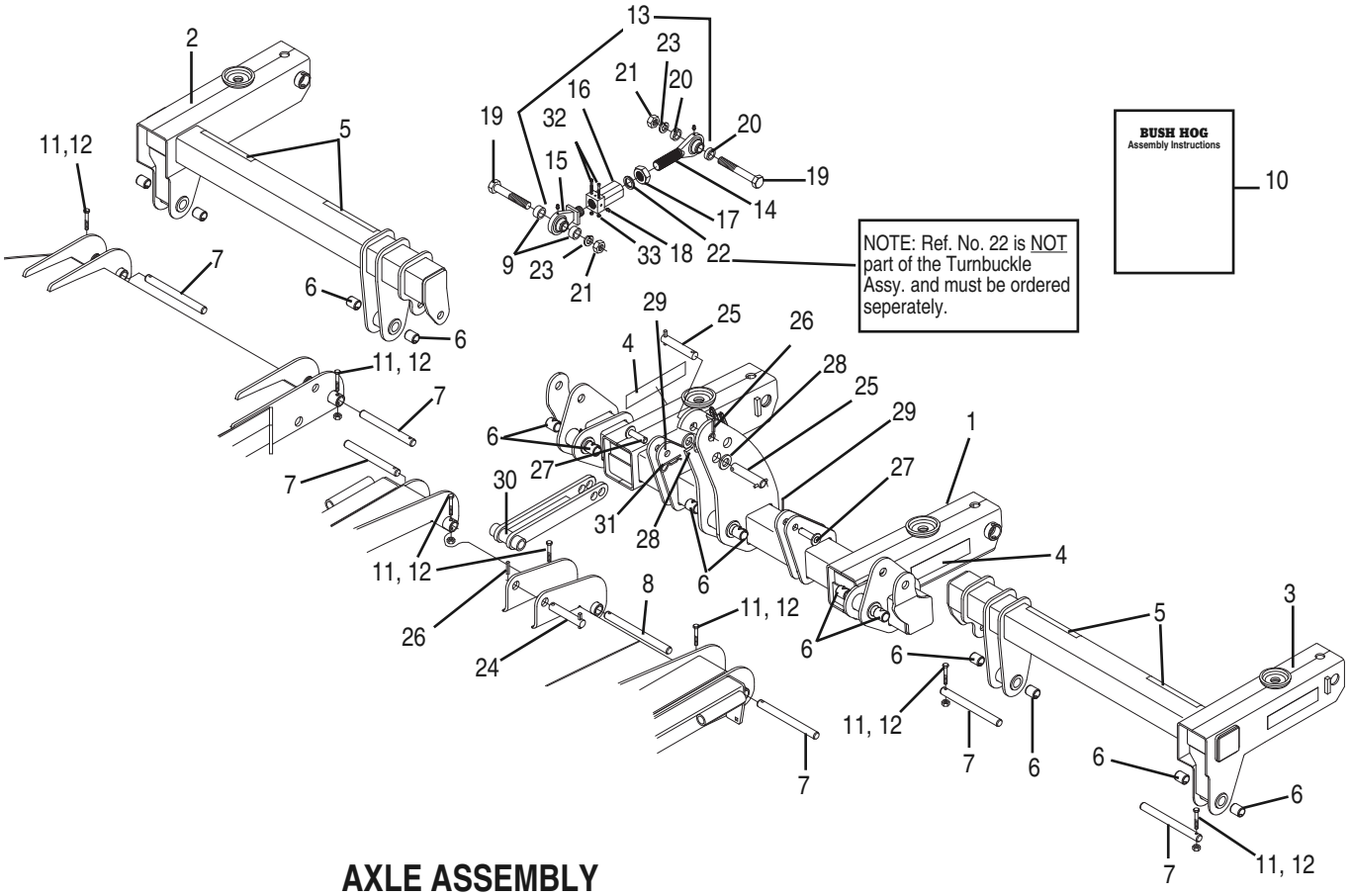

AXLE ASSEMBLY

Used on Models 2715, SN 12-04859 and Lower
12715 SN 12-05025 and Lower

REF. NO.	PART NO.	QTY.	DESCRIPTION
1	50069939	1	Center Axle
2	50054485	1	Right Wing Axle
3	50054497	1	Left Wing Axle
4	50031212	2	Amber Reflector
5	50031214	2	Red Reflector
6	50021149	14	Spring Bushing 1-1/4”
7	50054388	6	Pivot Pin 1” x 7.25”
8	50054387	1	Pivot Pin 1” x 8”
9	50052732	4	Spacer 3/4”
10	50054467	1	Instruction Sheet (Turnbuckle)
11	——	7	Capscrew 3/8” x 2” Gr.5
12	20363	7	Locknut 3/8”
13	50052742	2	Turnbuckle, Swivel (Items 14–18)
14	50052745	2	Rod Eye, Threaded
15	50052744	2	Rod Eye, Swivel
16	50052743	2	Turnbuckle Body
17	50052746	2	Lock Nut 1-1/4”

REF. NO.	PART NO.	QTY.	DESCRIPTION
18	449BH	6	Grease Fitting
19	19137	4	Capscrew 1” x 5-1/2” Gr.5
20	50045257	4	Spacer .47”
21	9163200	4	Locknut 1”
22	50038405	2	Nord-Lock Washer, 1-1/4”[1]
23	15821	4	Lockwasher 1”
24	50054468	1	Transport Pin
25	87293	4	Cylinder Pin Assy.
26	20325	2	Roll Pin 1/4” x 1-3/4”
27	14-32-49	2	Clevis Pin Weldment
28	20376	2	Flatwasher 1” SAE
29	20167	2	Cotter Pin 3/16” x 2”
30	50054443	1	Transport Latch Weldment
31	1273BH	1	Presto Pin
32	45185BH	2	Capscrew Hex Sckt 5/16” x 2” Gr.5
33	45186	2	Locknut 5/16” Center lock

© 2012 Alamo Group Inc.

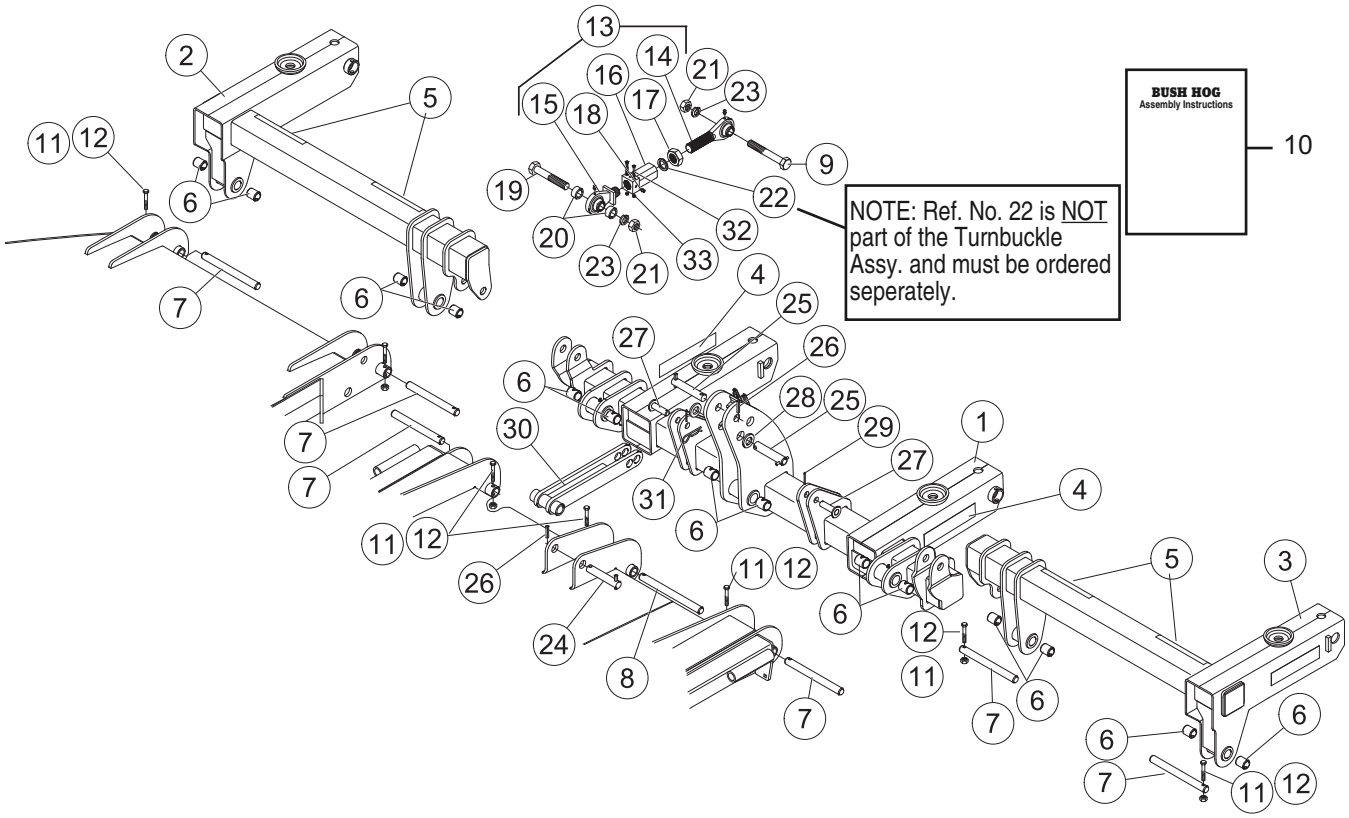

AXLE ASSEMBLY

Used on Models 2715, SN 12-04860 and Higher
12715 SN 12-05026 and Higher

REF. NO.	PART NO.	QTY.	DESCRIPTION
1	50069939	1	Center Axle
2	50054485	1	Right Wing Axle
3	50054497	1	Left Wing Axle
4	50031212	2	Amber Reflector
5	50031214	2	Red Reflector
6	50021149	14	Spring Bushing 1-1/4”
7	50054388	6	Pivot Pin 1” x 7.25”
8	50054387	1	Pivot Pin 1” x 8”
9	20547BH	2	Capscrew 1” x 4-1/2” Gr.5
10	50054467	1	Instruction Sheet (Turnbuckle)
11	——	7	Capscrew 3/8” x 2” Gr.5
12	——	7	Locknut 3/8”
13	50052742	2	Turnbuckle, Swivel (Items 14–18)
14	50052745	2	Rod Eye, Threaded
15	50052744	2	Rod Eye, Swivel
16	50052743	2	Turnbuckle Body
17	50052746	2	Lock Nut 1-1/4”

REF. NO.	PART NO.	QTY.	DESCRIPTION
18	449BH	6	Grease Fitting
19	19137	2	Capscrew 1” x 5-1/2” Gr.5
20	50045257	4	Spacer .47”
21	9163200	4	Locknut 1”
22	50038405	2	Nord-Lock Washer, 1-1/4”[1]
23	15821	4	Lockwasher 1”
24	50054468	1	Transport Pin
25	87293	4	Cylinder Pin Assy.
26	20325	2	Roll Pin 1/4” x 1-3/4”
27	14-32-49	2	Clevis Pin Weldment
28	20376	2	Flatwasher 1” SAE
29	20167	2	Cotter Pin 3/16” x 2”
30	50054443	1	Transport Latch Weldment
31	1273BH	1	Presto Pin
32	45185BH	2	Capscrew Hex Sckt 5/16” x 2” Gr.5
33	45186	2	Locknut 5/16” Center lock

© 2012 Alamo Group Inc.

AXLE ARM, SINGLE AND DUAL SPINDLE & HUB ASSEMBLIES

For 2715, 2710,12715, 12710 Models

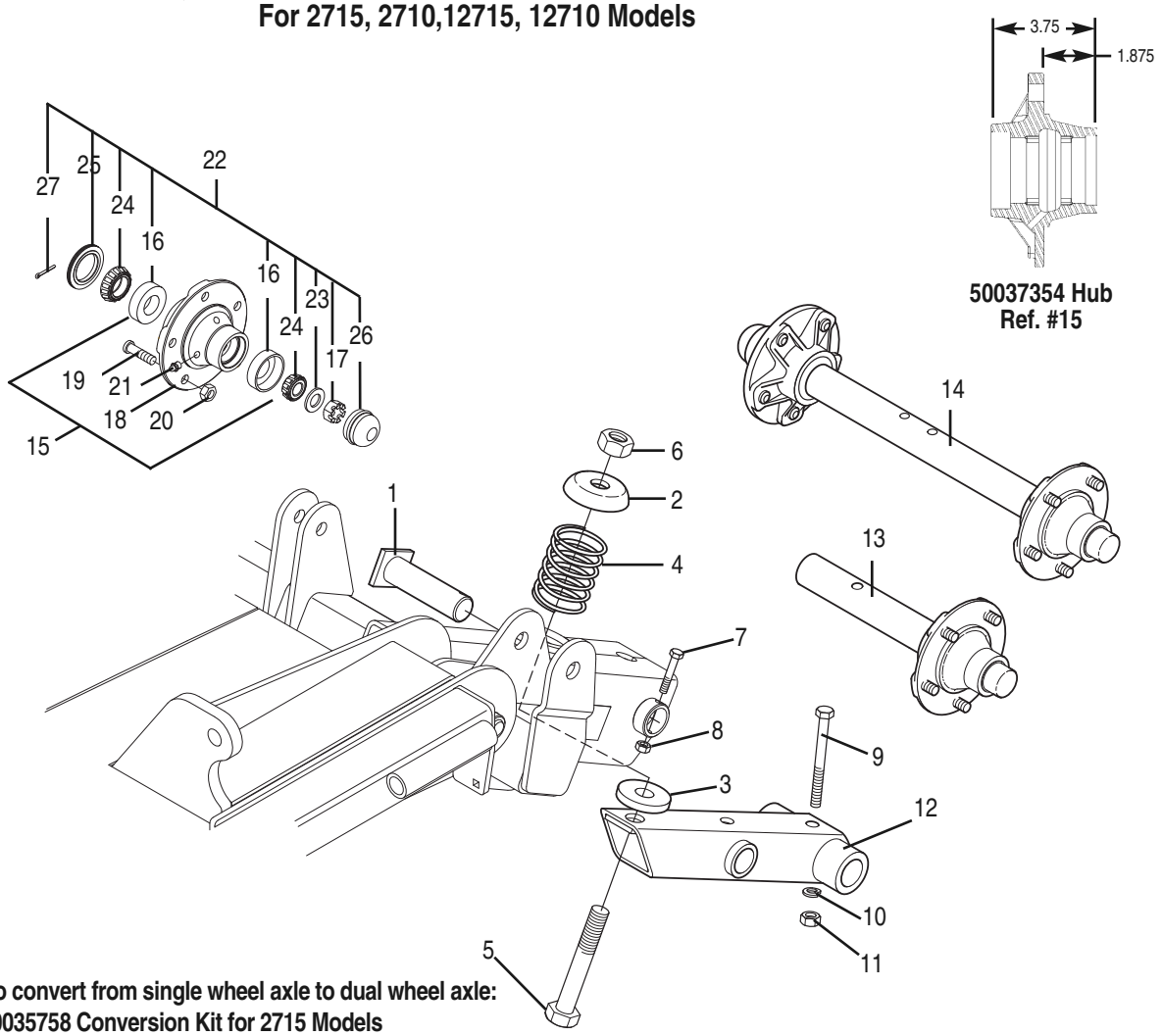

Note: To convert from single wheel axle to dual wheel axle:
Order 50035758 Conversion Kit for 2715 Models
Order 50035757 Conversion Kit for 2710 Models

REF. NO.	PART NO.	QTY.	DESCRIPTION
	50035743	**1**	**Dual Axle, RH Center**
	50035744	**1**	**Dual Axle, LH Center**
	50035745	**1**	**Single Axle, RH Wing**
	50035748	**1**	**Single Axle, LH Wing**
1	50054506	4	Pin Weld.
2	91152	4	Spring Cup
3	91261	4	Rubber Cushion
4	50035301	4	Spring
5	20860	4	Capscrew 1" x 7-1/2"
6	44524BH	4	Locknut 1", Flanged
7	——	4	Capscrew 3/8" x 2 1/2"
8	20363	4	Locknut 3/8"
9	——	1	Capscrew 1/2" x 3 1/2" Gr.5
10	——	A/R	Lockwasher 1/2"
11	——	A/R	Hex Nut 1/2"
12	92007	1	Axle Tube

REF. NO.	PART NO.	QTY.	DESCRIPTION
13	50052960	1	Single Spindle for Wings w/o Hubs
14	50052961	1	Dual Spindle for Center w/o Hubs
15	50035740	1	Hub Assy. w/Cups
16	14-6-197	2	Cup, Inner
17	120BH	1	Slotted Nut
18	50037354	1	Hub Casting
19	15445	5	Lug Bolt
20	15515BH	5	Lug Nut
21	449BH	1	Grease Fitting
22	50035756	1	Bearing Repair Kit
23	——	1	Flatwasher 3/4" SAE
24	50076BH	2	Bearing Cone, Inner
25	7967	1	Seal
26	14-6-243	1	Hub Cap
27	15973	1	Cotter Pin

© 2012 Alamo Group Inc.

TANDEM AXLE ASSEMBLY
For 2715, 2710,12715, 12710 Models

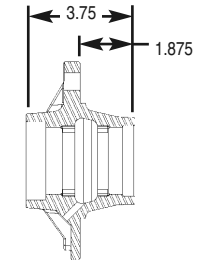

50037354 Hub
Ref. #9

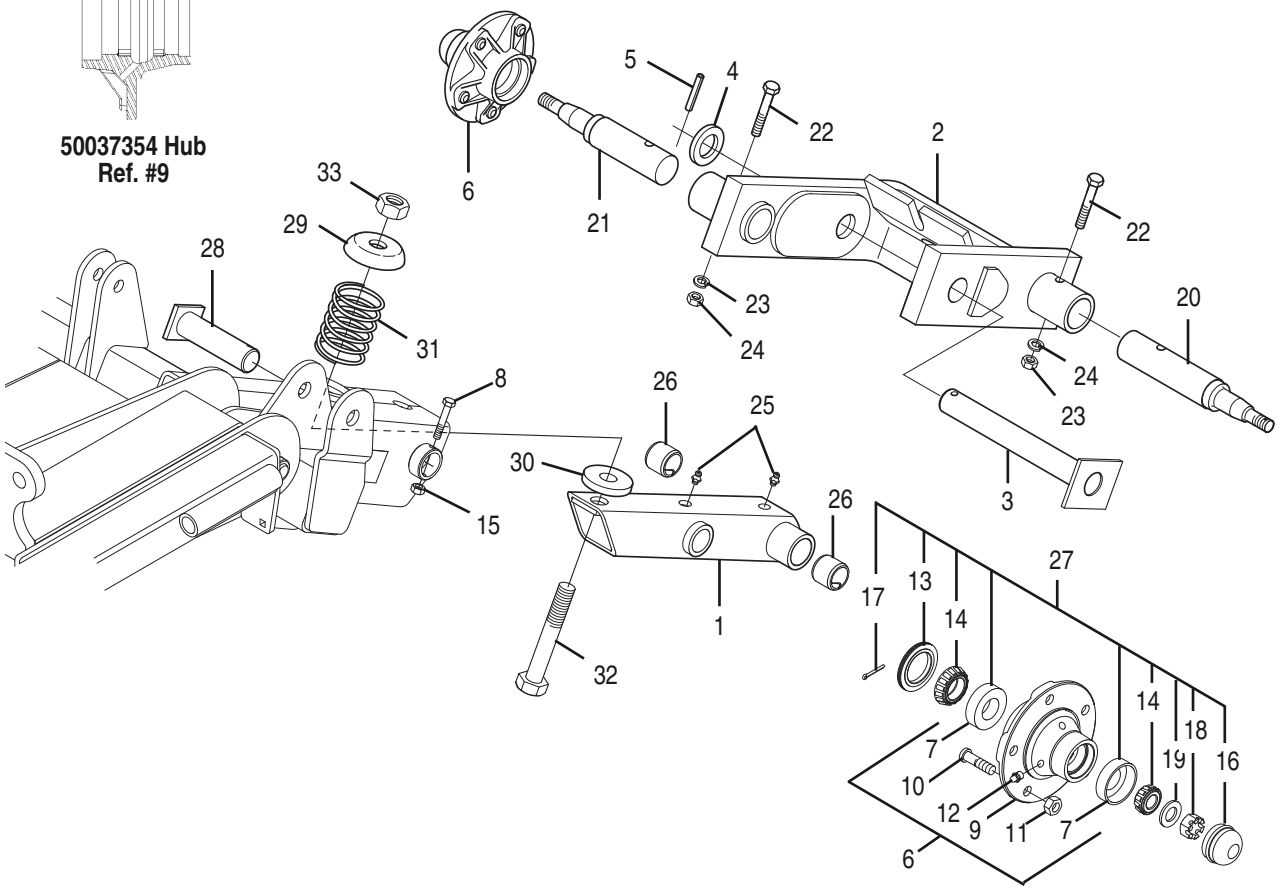

Note: To convert to tandem center axles, order 50037700 Conversion Bundle.

REF. NO.	PART NO.	QTY.	DESCRIPTION
	50035741	**1**	**Tandem Axle Assembly, L.H.**
	50035742	**1**	**Tandem Axle Assembly, R.H.**
1	50032471	1	Tandem Tube Assembly
2	50032478	1	Spindle Weldment, L.H. (Shown)
	50032477	1	Spindle Weldment, R.H.
3	50032483	1	Pin Weldment
4	15924	1	Flatwasher 1-1/2”
5	53065	1	Spiral Pin 3/8” x 2-1/2”
6	50035740	2	Hub Assembly (7–12)
7	14-6-197	2	Cup, Inner
8	——	4	Capscrew 3/8” x 2 1/2”
9	50037354	1	Hub
10	15445	5	Lug Bolt
11	15515BH	5	Lug Nut
12	449BH	1	Grease Fitting
13	7967	2	Seal
14	50076BH	4	Bearing Cone, Inner
15	20363	4	Locknut 3/8”

REF. NO.	PART NO.	QTY.	DESCRIPTION
16	14-6-243	2	Hub Cap
17	296	2	Cotter Pin 1/8” x 1-1/2”
18	120BH	2	Slt. Hex Nut 3/4” NF
19	——	2	Flatwasher 3/4”
20	50041171	1	Spindle, Tandem 11.19 Lg.
21	50041170	1	Spindle, Tandem 9.82 Lg.
22	——	2	Capscrew 1/2” x 3-1/4”
23	——	2	Locknut 1/2”
24	——	2	Lockwasher 1/2”
25	449BH	2	Grease Fitting
26	50028543	2	Spring Bushing
27	50035756	1	Bearing Repair Kit
28	50054506	4	Pin Weldment
29	91152	4	Spring Cup
30	91261	4	Rubber Cushion
31	50035301	4	Spring
32	20860	4	Capscrew 1” x 7-1/2”
33	44524BH	4	Locknut 1”, Flanged

© 2012 Alamo Group Inc.

77SP AUTO WHEEL
15'' X 5''

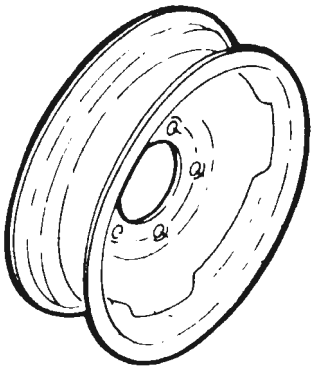

7650021 AUTO WHEEL
15" x 6"

Models: 2715, 2710, 12715 & 12710

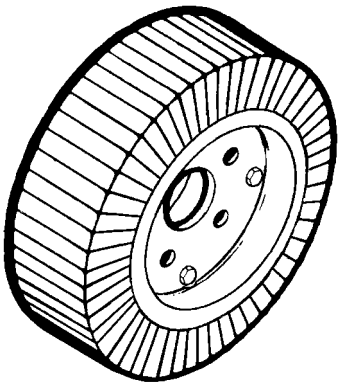

294SP SOLID TIRE ASSEMBLY

50023286 MODIFIED SOLID TIRE ASSEMBLY WITH EXTRA BOLTS
Models: 2715, 2710, 12715 & 12710

50030908 AIRPLANE TIRE ASSEMBLY (FOAM FILLED)
Models: 2715, 2710, 12715 & 12710
(Replaced By 50063695SP)

REF. NO.	PART NO.	QTY.	DESCRIPTION
1	97709	1	Tire 24 x7.7 x 10 – 14/16 Ply
2	92860	1	Tube 5.5 x 10
3	92861	1	Wheel Flange w/ Hole for Tube Valve
4	92862	1	Wheel Flange w/o Hole for Tube Valve
5	92863	1	Inner Wheel Lining
6	——	10	Capscrew 1/2" x 1" Gr.5
7	——	10	Lockwasher 1/2"
8	——	10	Hex Nut 1/2"

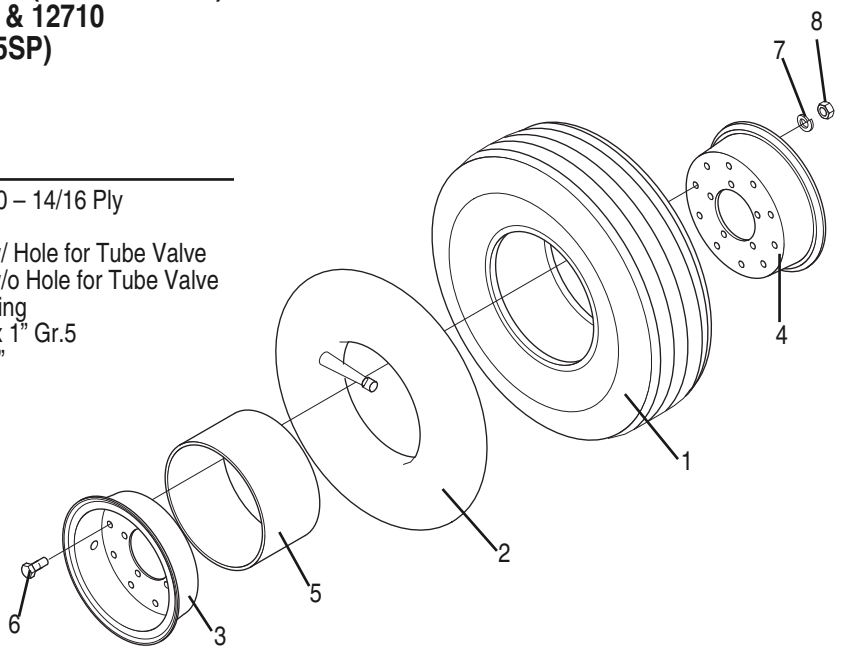

© 2012 Alamo Group Inc.

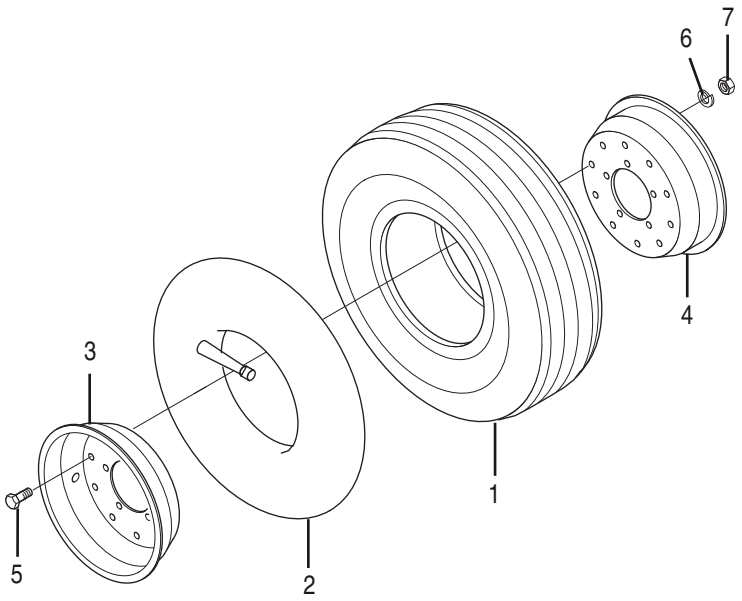

50050727SP AIRPLANE TIRE ASSEMBLY
Models: 2715, 2710, 12715 & 12710

REF. NO.	PART NO.	QTY.	DESCRIPTION
1	50051233BH	1	Tire 29 x 9.0 – 15 / 16 Ply
2	50051234	1	Tube 9 x 15
3	50051235	1	Wheel Flange with Valve Hole
4	50051236	1	Wheel Flange without Valve Hole
5	——	10	Capscrew 1/2" x 1" Gr.5
6	——	10	Lockwasher 1/2"
7	——	10	Hex Nut 1/2"

FOAM FILLED AIRPLANE TIRE ASSY.
26 x 6.6 x 14"

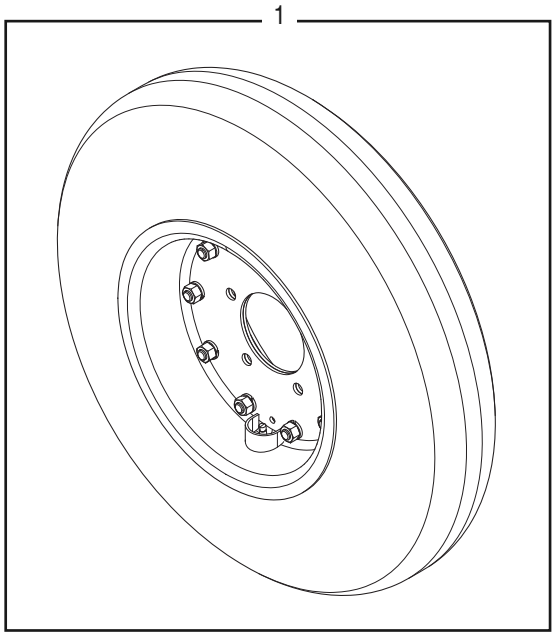

REF. NO.	PART NO.	QTY.	DESCRIPTION
1	50068834SP	1	Foam Filled Tire Assembly 26 x 6.6 x 14

© 2012 Alamo Group Inc.

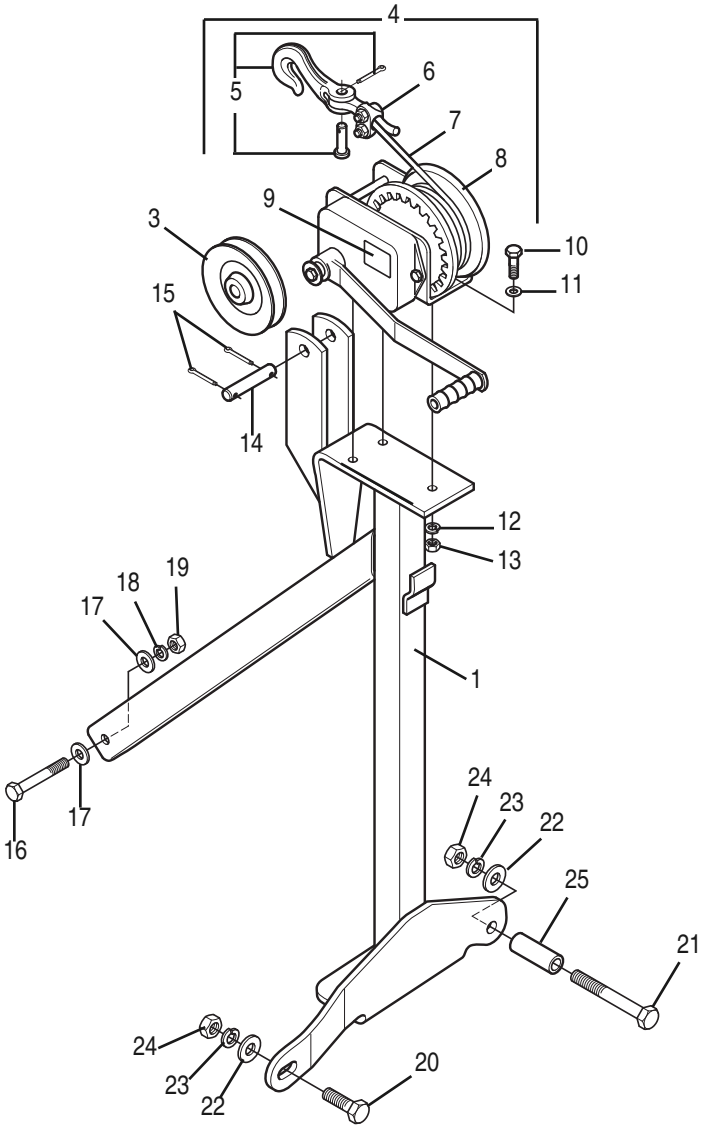

50054544 MANUAL WING LIFT KIT
Models: 2715, 2710, 12715 & 12710

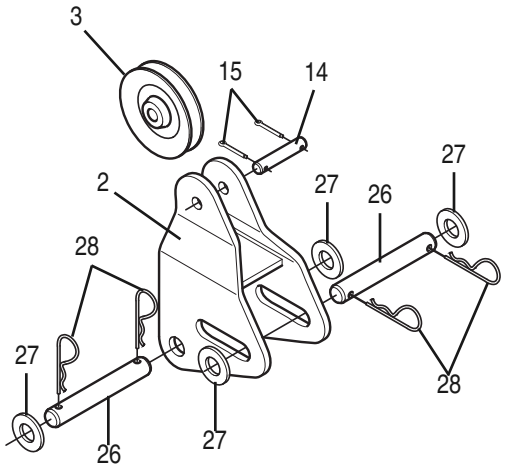

REF. NO.	PART NO.	QTY.	DESCRIPTION
1	50058080	1	Winch Stand Weld.
2	50058187	1	Sheave Mount Weld.
3	25B42463	2	Sheave
4	86481	1	Winch Assy. (Items 5-9)
5	86480	1	Winch
6	11156	1	Cable
7	11157	1	Cable Clamp
8	N/A	1	Grab Hook
9	25B42407	1	Caution Decal
10	——	3	Capscrew 3/8” x 1-1/4” Gr.5
11	——	3	Flatwasher 3/8”
12	——	3	Lockwasher 3/8”
13	——	3	Hex Nut 3/8”
14	77819	3	Pin

REF. NO.	PART NO.	QTY.	DESCRIPTION
15	15662	6	Cotter Pin 1/8” x 1”
16	——	1	Capscrew 1/2” x 1-3/4” Gr.5
17	——	2	Flatwasher 1/2”
18	——	1	Lockwasher 1/2”
19	——	1	Hex Nut 1/2”
20	——	1	Capscrew 5/8” x 2” Gr.5
21	——	1	Capscrew 5/8” x 4-3/4” Gr.5
22	——	2	Flatwasher 5/8”
23	——	2	Lockwasher 5/8”
24	——	2	Hex Nut 5/8”
25	50058047	1	Spacer
26	86471	2	Clevis Pin
27	15908BH	4	Flatwasher 1”
28	1273BH	4	Presto Pin

© 2012 Alamo Group Inc.

FOAM FILLED AIRPLANE TIRE ASSY.
24 x 7.25 x 12”

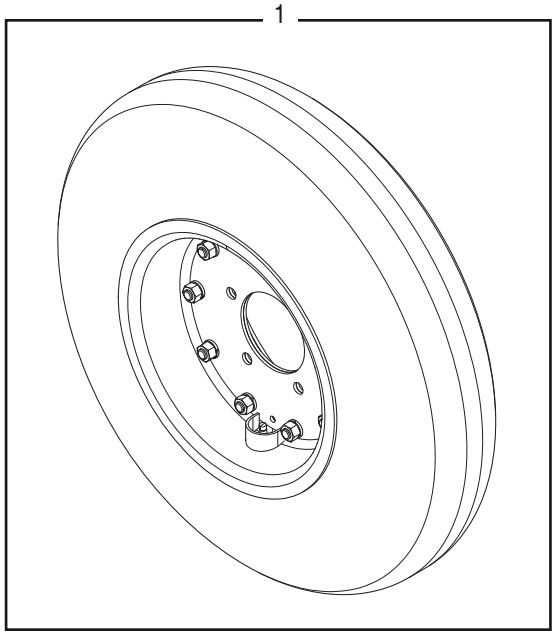

REF. NO.	PART NO.	QTY.	DESCRIPTION
1	50063695SP	1	Foam Filled Tire Assembly 24 x 7.25 x 12

© 2012 Alamo Group Inc.

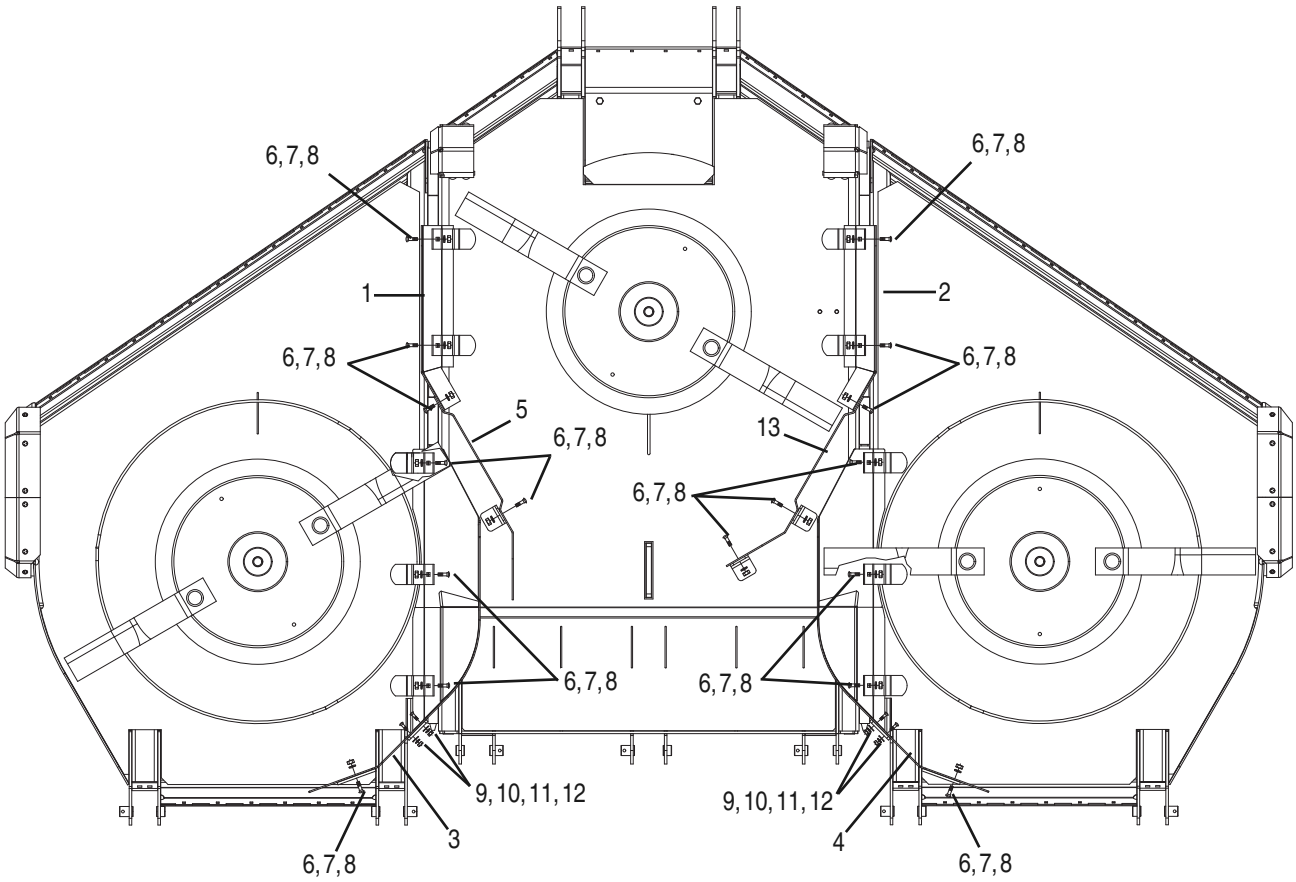

50054543 BAFFLE KIT - 2715 & 12715 Models
50054771 BAFFLE KIT - 2710 & 12710 Right Wing
50054772 BAFFLE KIT - 2710 & 12710 Left Wing

REF. NO.	PART NO.	QTY 2715	QTY 2710	DESCRIPTION
1	50054640	1	1	Center Baffle, R.H.
2	50054639	1	1	Center Baffle, L.H.
3	50054647	1	1	Wing Baffle, R.H.
4	50054644	1	1	Wing Baffle, L.H.
5	50058283	1	1	Center Baffle Extension, R.H.
6	5161614	17	9	Carriage Bolt 1/2" x 1-1/2"
7	——	17	9	Lockwasher 1/2"
8	——	17	9	Hex Nut 1/2"
9	44286	4	2	Carriage Bolt 3/8" x 1-1/2"
10	——	4	2	Flatwasher 3/8"
11	——	4	2	Lockwasher 3/8"
12	——	4	2	Hex Nut 3/8"
13	50058284	1	1	Center Baffle Extension, L.H.

© 2012 Alamo Group Inc.

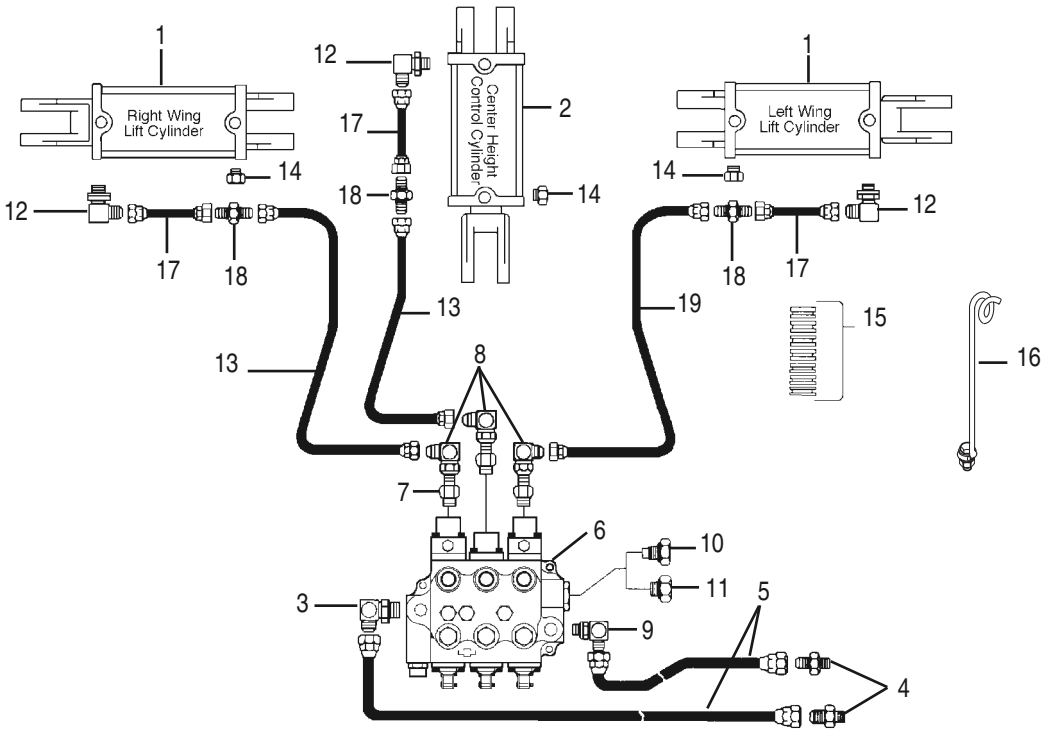

HYDRAULICS FOR 2715, 2710, 12715 & 12710 MODELS WHEN PLUMBING TO REMOTE VALVE

REF. NO.	PART NO.	QTY.	DESCRIPTION
1	99564	2	Wing Cylinder (Monarch)
	50047474	2	Wing Cylinder (Bailey)
2	99565	1	Center Height Cylinder (Monarch)
	50047475	1	Center Height Cylinder (Bailey)
3	61471	1	Elbow 90°
4	53341BH	2	Adapter 3/4" JIC to 3/4" SAE
	25D25683	2	Adapter 3/4" JIC to 1/2" NPT
5	62776	2	Hose 72°
6	99981	1	Valve Assy.
7	62428	3	Hyd. Adapter
8	63453	3	Adapter 90°
9	25H40475	1	Elbow 90°
10	13023BH	1	Closed Center Plug
11	25H30502	1	Open Center Plug
12	14-40-98	1	Elbow 90° 3/4" SAE to 9/16" JIC
13	50015063	1	Hydraulic Hose 196"
14	N/A	1	Breather Plug
15	63451	1	Stop Kit
16	12032	1	Hose Holder (sold separately)
17	25H41146	3	Hydraulic Hose 31"
18	25G13603	3	Union 9/16" JIC x 9/16" JIC
19	62774	1	Hydraulic Hose, 228"

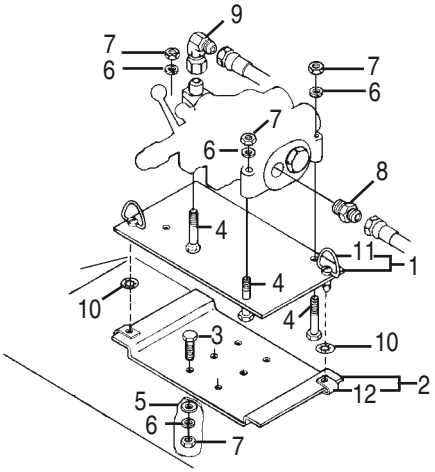

67717 VALVE BRACKET KIT

REF. NO.	PART NO.	QTY.	DESCRIPTION
1	67718	1	Valve Plate Assembly
2	67719	1	Base Plate Assembly
3	——	4	Capscrew 3/8" - 16 UNC x 1 1/2"
4	——	3	Capscrew 3/8" - 16 UNC x 2 1/2"
5	——	4	Flatwasher 3/8"
6	——	7	Lockwasher 3/8"
7	——	7	Hex Nut 3/8" - 16 UNC
8	25H43832	1	Hydraulic Fitting, Adapter
9	25H40576	1	Hydraulic Fitting, 90° Elbow
10	80536	2	Push-on Retainer
11	67534	2	Quarter Turn Fastener
12	67533	2	Clip-on Receptacle

© 2012 Alamo Group Inc.

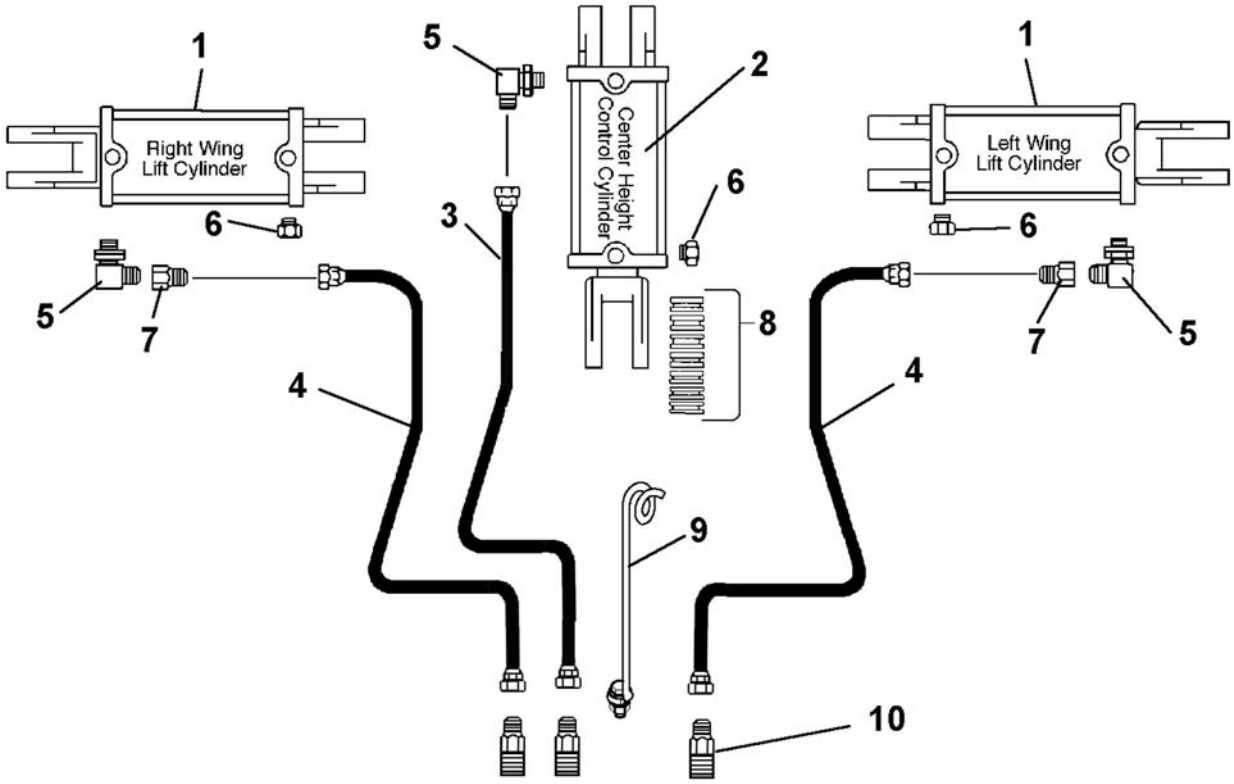

HYDRAULICS FOR 2715, 2710, 12715 & 12710 MODELS WHEN PLUMBING TO TRACTOR REMOTES

Ref. No.	Part No.	Description	Qty.
1	99564	Wing Lift Cylinder	2
2	99565	Axle Control Cylinder	1
3	62774	Hydraulic Hose Assy. 228"	1
4	50015063	Hydraulic Hose Assy. 196"	2
5	14-40-98	Elbow 90 degree	3
6	86500	Breather Plug	3
7	50068458	Restrictor, .078 Orfice	2
8	63451	Stop Kit	1
9	12032	Hose Holder Assy	1
10	53340BH	Adaptor 9/16 JIC to 3/4 SAE	3
	24-6-434	Adaptor 9/16 JIC to 1/2 NPT	3

© 2012 Alamo Group Inc.

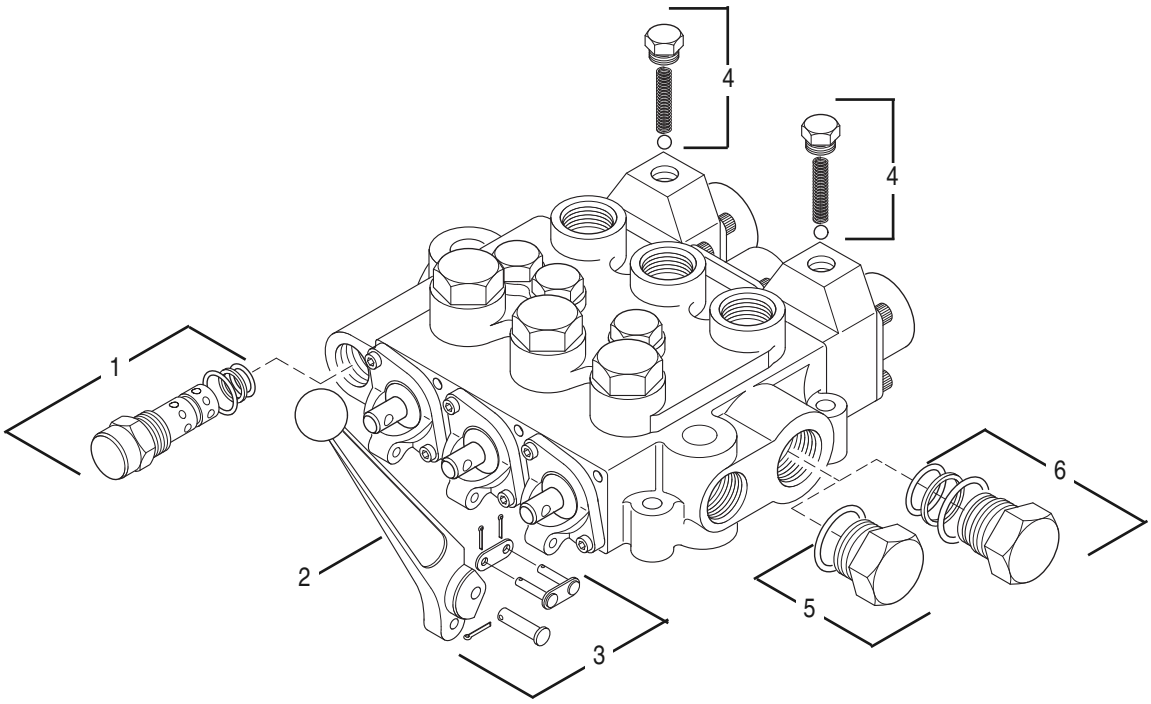

99981 HYDRAULIC VALVE – 3 SPOOL
For 2715, 2710, 12715 & 12710 Models
Mfd. by Cross

REF. NO.	PART NO.	QTY.	DESCRIPTION
*	50017444	1	Seal Kit For Valve Body
1	50017445	1	Relief Valve Kit
2	50017446	3	Handle
3	50017447	3	Pin Kit
4	50017448	2	Detent
5	50017449	1	Open Center Plug Kit
6	50020596	1	Closed Center Plug Kit

© 2012 Alamo Group Inc.

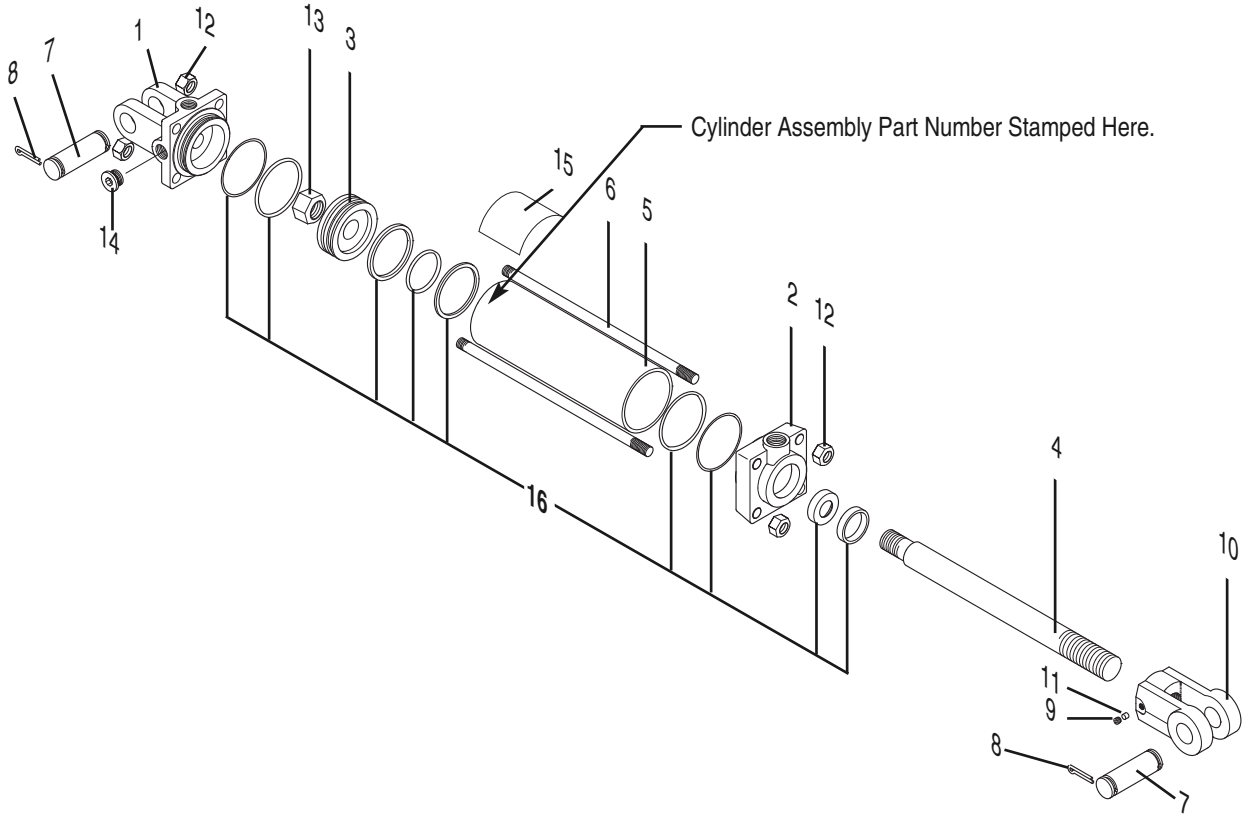

99565 AXLE HYDRAULIC CYLINDER

3.5" Bore X 8" Stroke 1.25 Rod Diameter
3/4" – 16 ORB Ports
Manufactured by Monarch

REF. NO.	PART NO.	QTY.	DESCRIPTION
1	95429	1	Clevis Cap
2	95430	1	Rod Cap
3	50017628	1	Piston
4	95431	1	Rod 1.25" Dia.
5	95426	1	Cylinder Tube
6	95427	4	Tie Rod
7	95425	2	Pin 1" Dia.
8	21020614	4	Cotter Pin 3/16" x 1 1/2"
9	95433	1	Thread Lock
10	95428	1	Rod Clevis 1.25" x 1"
11	95422	1	Set Screw 3/8" x 1/2 Knurled
12	95420	8	Hex Nut 5/8" UNF
13	95421	1	Hex Nut 1"-14
14	95435	1	Plug 3/4"
15	50042072	1	Caution Decal
16	**50017623**	**1**	**Seal Kit**

99564 WING HYDRAULIC CYLINDER

3" Bore X 12" Stroke 1.25" Rod Diameter
3/4" – 16 ORB Ports
Manufactured by Monarch

REF. NO.	PART NO.	QTY.	DESCRIPTION
1	95440	1	Clevis Cap
2	95439	1	Rod Cap
3	50017627	1	Piston
4	95436	1	Rod 1.25" Dia.
5	95437	1	Cylinder Tube
6	95438	4	Tie Rod
7	95425	2	Pin 1" Dia.
8	21020614	4	Cotter Pin 3/16" x 1 1/2"
9	95433	1	Thread Lock
10	95428	1	Rod Clevis 1.25" x 1"
11	95422	1	Set Screw 3/8" x 1/2 Knurled
12	8151600	8	Hex Nut 1/2" - 14 UNC
13	95421	1	Hex Nut 1"-14
14	95435	1	Plug 3/4"
15	50042072	1	Caution Decal
16	**50017622**	**1**	**Seal Kit**

© 2012 Alamo Group Inc.

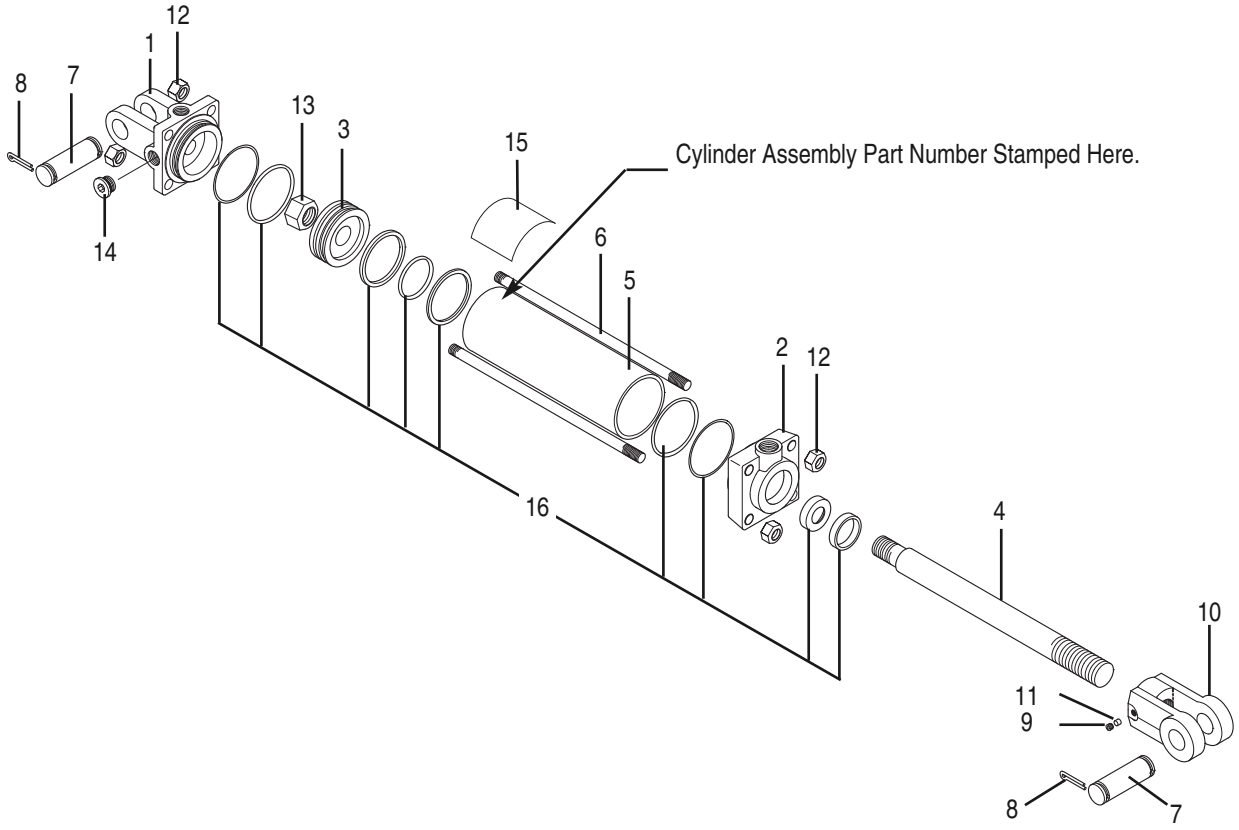

50047474 WING LIFT HYDRAULIC CYLINDER

Mfd. by Bailey
3" Bore x 12" Stroke, 1.25" Rod Dia.
3/4"–16 UNF Ports
For Models 2715, 2710, 12715 & 12710

50047475 CENTER HEIGHT CONTROL HYDRAULIC CYLINDER

Mfd. by Bailey
3.5" Bore x 8" Stroke, 1.25" Rod Dia.
3/4"–16 UNF Ports
For Models 2715, 2710, 12715 & 12710

REF. NO.	PART NO.	QTY.	DESCRIPTION
1	——	1	Clevis Cap
2	——	1	Rod Cap
3	——	1	Piston
4	——	1	Rod 1.25" Dia.
5	——	1	Cylinder Tube
6	——	4	Tie Rod
7	——	2	Pin 1" Dia.
8	——	4	Cotter Pin 3/16" x 1 1/2"
9	——	1	Thread Lock
10	——	1	Rod Clevis 1.25" x 1"
11	——	1	Set Screw 3/8" x 1/2 Knurled
12	——	8	Hex Nut 5/8" UNF
13	——	1	Hex Nut 1"-14
14	——	1	Plug 3/4"
15	——	1	Caution Decal
16	**50017623**	**1**	**Seal Kit for 3.5" Bore (50047475 Cylinder)**
	50017622	**1**	**Seal Kit for 3" Bore (50047474 Cylinder)**

© 2012 Alamo Group Inc.

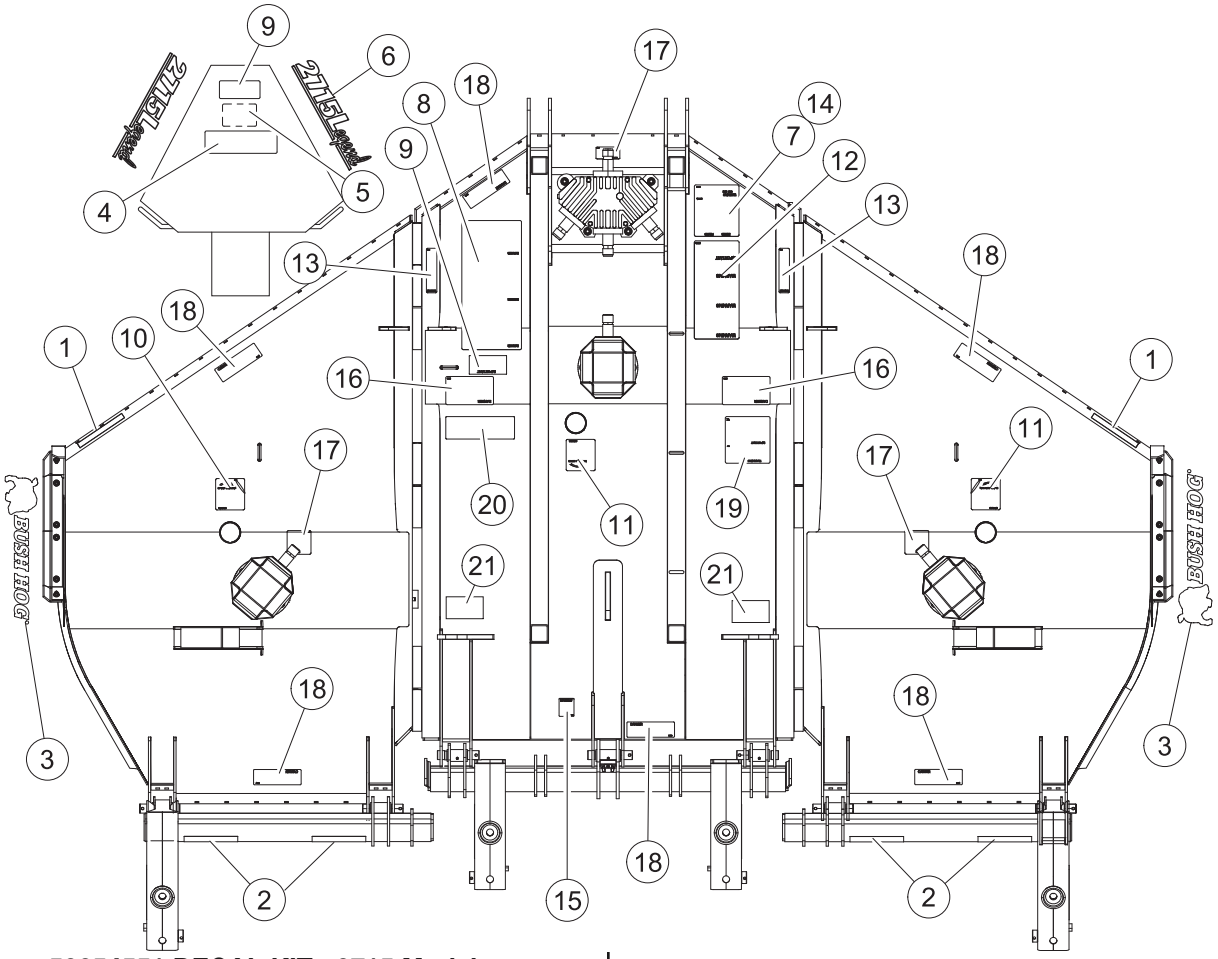

50054551 DECAL KIT - 2715 Models
50054778 DECAL KIT - 2710 Models
(540 RPM)

Ref. No.	Part No.	Description	Qty. Req'd.
1	50031212	Amber Reflector	4
2	50031214	Red Reflector	6
3	50061049	Bush Hog Decal	2
4	87340	Important Decal	1
5	87317	Drawbar Decal (Used On Earlier Versions)	1
6	50054650	Model No. Decal 2715	2
	50054729	Model No. Decal 2710	2
7	D547	Danger Decal	1
8	D550	Sheet Decal	1
9	91443	Important Decal	2
10	D552	Blade Rotation Decal CW	1
11	D551	Blade Rotation Decal CCW	2
12	D553	Warning Decal	1
13	D555	Danger Decal	2
15	D544	Important Decal	1
16	D565	Danger Decal	2
17	D546	Danger Decal	3
18	D614	Danger Decal (Thrown Objects)	6
19	D559	Gen. Bush Hog Parts Decal	1
20	D587	Lubrication Decal	1
21	D575	Danger Decal (Crushing Hazard) (On 2710 Models Only)	2

50054570 DECAL KIT - 12715 Models
50054779 DECAL KIT - 12710 Models
(1000 RPM)

Ref. No.	Part No.	Description	Qty. Req'd.
1	50031212	Amber Reflector	4
2	50031214	Red Reflector	6
3	50061049	Bush Hog Decal	2
4	87340	Important Decal	1
5	87317	Drawbar Decal (Used On Earlier Versions)	1
6	50054651	Model No. Decal 12715	2
	50054776	Model No. Decal 12710	2
7	D547	Danger Decal	1
8	D550	Sheet Decal	1
9	91443	Important Decal	2
10	D552	Blade Rotation Decal CW	1
11	D551	Blade Rotation Decal CCW	2
12	D553	Warning Decal	1
13	D555	Danger Decal	2
14	D548	1000 RPM Overlay Decal	1
15	D544	Important Decal	1
16	D565	Danger Decal	2
17	D546	Danger Decal	3
18	D614	Danger Decal (Thrown Objects)	6
19	D559	Gen. Bush Hog Parts Decal	1
20	D587	Lubrication Decal	1
21	D575	Danger Decal (Crushing Hazard) (On 12710 Models Only)	2

© 2012 Alamo Group Inc.

BUSH HOG®

2501 GRIFFIN AVE. • SELMA, AL 36703
WWW.BUSHHOG.COM