BH100 SERIES

ROTARY CUTTER
MODELS

BH114, BH115, BH116

BUSH HOG®

Revised 07/21

PARTS MANUAL
SECTION 126

An Operator's Manual was shipped with the equipment. The Operator's Manual is an integral part of the safe operation of this machine and must be maintained with the unit at all times. **READ, UNDERSTAND, and FOLLOW** the Safety and Operation Instructions contained in this manual before operating the equipment. If the Operator's Manual is not with the equipment, contact your dealer or Bush Hog to obtain a copy before operating the equipment.

Safety Video

Important Operating and Safety Instructions are found in the Mower Safety Video that can be instantly accessed on the internet at: www.algqr.com/bve

www.algqr.com/bve

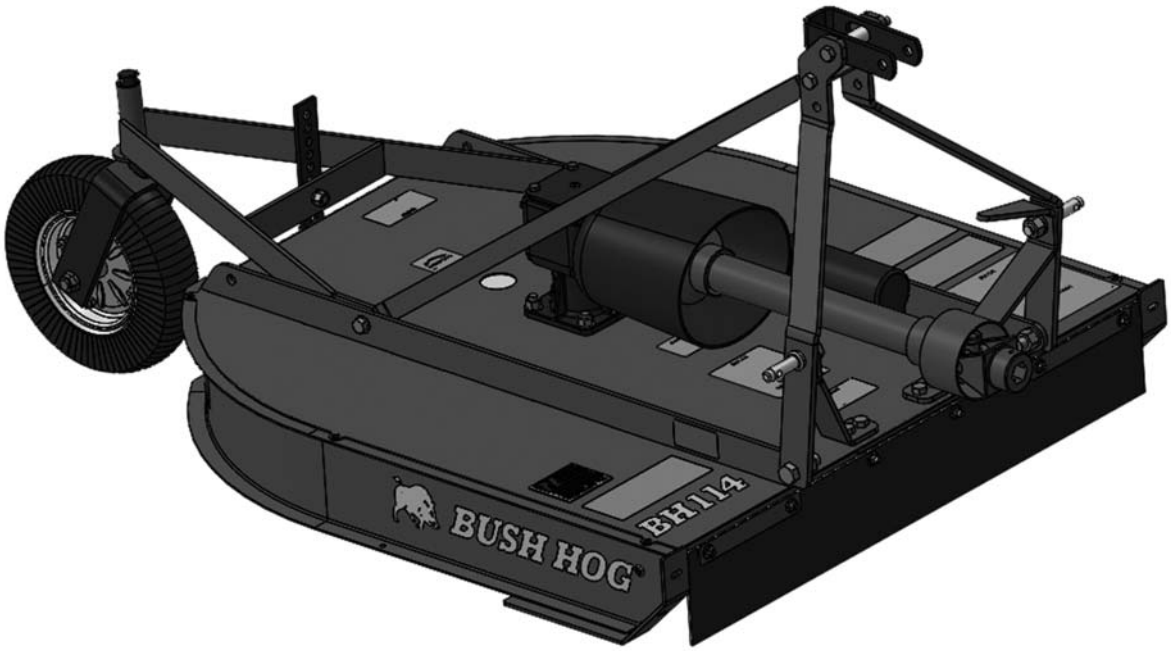

BUSH HOG®
2501 Griffin Ave.
Selma, AL 36703
Parts Ordering 1-800-304-2836
www.bushhog.com

ATTENCIÓN! LEA EL INSTRUCTIVO

Si No Lee Ingles, Pida Ayuda a Alguien Que Si Lo Lea Para Que le Traduzca las Medidas de Sequridad.

MEMBER OF THE ALAMO GROUP
ALWAYS ON THE CUTTING EDGE®

©2019 Alamo Group Inc.

PARTS ORDERING GUIDE

The following instructions are offered to help eliminate needless delay and error in processing purchase orders for the equipment in this section.

1. The Parts Section is prepared in logical sequence and grouping of parts that belong to the basic machine featured in this manual. Part Numbers and Descriptions are given to help locate the parts and quantities required.

2. The Purchase Order must include the name and address of the person or organization ordering the parts, who should be charged, and if possible, the serial number of the machine for which the parts are ordered.

3. The Purchase Order must clearly list the quantity of each part, the complete and correct part number (be sure to include all periods), and the basic name of the part.

4. The Manufacturer reserves the right to substitute parts where applicable.

5. Some parts are unlisted items which are special production items not normally stocked and are subject to special handling. Request a quotation for such parts before sending a Purchase Order.

6. The Manufacturer reserves the right to change prices without prior notice.

For maximum safety and to guarantee optimum product reliability, always use genuine BUSH HOG Parts. The use of inferior replacement parts may causepremature or catastrophic failure which could result in serious injury or death.Direct any questions regarding parts to:

BUSH HOG
2501 Griffin Ave.
Selma, AL 36703
www.bushhog.com
Contact Us
800-304-2836

BUSH HOG®

To the Owner/Operator/Dealer

All implements with moving parts are potentially hazardous. There is no substitute for a cautious, safe-minded operator who recognizes the potential hazards and follows reasonable safety practices. The manufacturer has designed this implement to be used with all its safety equipment properly attached to minimize the chance of accidents.

BEFORE YOU START! Read the safety messages on the implement and shown in your manual. Observe the rules of safety and common sense!

WARRANTY INFORMATION:
Read and understand the complete Warranty Statement found in this Manual. Fill out the Warranty RegistrationForm in full and return it to within 30 Days. Make certain the Serial Number of the Machine is recorded on theWarranty Card and on the Warranty Form that you retain.

LIMITED WARRANTY

Bush Hog warrants to the original purchaser of any new Bush Hog equipment, purchased from an authorized Bush Hog dealer, that the equipment be free from defects in material and workmanship for a period of one (1) year for non-commercial, state and municipalities' use and ninety (90) days for commercial use from date of retail sale. The obligation of Bush Hog to the purchaser under this warranty is limited to the repair or replacement of defective parts.

Replacement or repair parts installed in the equipment covered by this limited warranty are warranted for ninety (90) days from the date of purchase of such part or to the expiration of the applicable new equipment warranty period, whichever occurs later. Warranted parts shall be provided at no cost to the user at an authorized Bush Hog dealer during regular working hours. Bush Hog reserves the right to inspect any equipment or parts which are claimed to have been defective in material or workmanship.

In addition to the standard Limited Warranty shown above, Bush Hog also provides:

A TEN-YEAR (120 months) GEARBOX LIMITED WARRANTY* (6 Years Full Coverage; Parts Only for Years 7 through 10) provided they have been properly maintained† and have not been subjected to abuse or mis-use except as limited below.

*WARRANTY LIMITATIONS - GEARBOX

A. Gearbox warranty extends to the original purchaser of a Bush Hog Rotary Cutter Only.
B. Warranty claimant must provide proper product registration and original receipt for purchase.
C. Bush Hog reserves the right to warrant Gearboxes and components at our discretion based on photographic or video evidence of product failure.
D. If Bush Hog deems a Gearbox failed due to defects in materials or workmanship, users' Gearboxes may be rebuilt by Bush Hog or replaced by new or rebuilt Gearboxes at the option of Bush Hog.

A ONE-YEAR (12 months) LIMITED WARRANTY** on the DRIVELINE components provided they have been properly maintained† and have not been subjected to abuse or mis-use.

* *WARRANTY LIMITATIONS - DRIVELINE

A. A ONE-YEAR (12 months) DRIVELINE LIMITED WARRANTY applies to SHIELDS except where evidence of wear from contact with other parts on the shield voids this warranty.
B. Shield Bearings are wearing parts and are not warrantable.
C. Slip-Clutch Plates are wearing parts and are not warrantable. Evidence of "burning up" Slip-Clutch Plates due to improper adjustment will void warranty on Slip-Clutch Parts.

† NOTE - "*properly maintained*" specifically includes, but is not limited to:

A) Running Gearboxes with the proper amount of the correct lubricant.
B) Adjusting Slip-Clutches correctly to provide proper protection for Driveline and Gearbox components.
C) Proper lubrication of all DRIVELINE components as specified.
D) Maintaining proper bearing preload on all Gearbox shafts.

DISCLAIMER OF IMPLIED WARRANTIES & CONSEQUENTIAL DAMAGES

Bush Hog's obligation under this limited warranty, to the extent allowed by law, is in lieu of all warranties, implied or expressed, INCLUDING IMPLIED WARRANTIES OF MERCHANTABILITY AND FITNESS FOR A PARTICULAR PURPOSE and any liability for incidental and consequential damages with respect to the sale or use of the items warranted. Such incidental and consequential damages shall include but not be limited to: transportation charges other than normal freight charges; cost of installation other than cost approved by Bush Hog; duty; taxes; charges for normal service or adjustment; loss of crops or any other loss of income; rental of substitute equipment, expenses due to loss, damage, detention or delay in the delivery of equipment or parts resulting from acts beyond the control of Bush Hog.

THIS LIMITED WARRANTY SHALL NOT APPLY:

1. To vendor items which carry their own warranties.
2. If the unit has been subjected to misapplication, abuse, misuse, negligence, fire or other accident.
3. If parts not made or supplied by Bush Hog have been used in connection with the unit, if, in the sole judgment of Bush Hog such use affects its performance, stability or reliability.
4. If the unit has been altered or repaired outside of an authorized Bush Hog dealership in a manner which, in the sole judgment of Bush Hog, affects its performance, stability or reliability.
5. To normal maintenance service and normal replacement items such as gearbox lubricant, hydraulic fluid, worn blades, or to normal deterioration of such things as belts and exterior finish due to use or exposure.
6. To expendable or wear items such as teeth, chains, sprockets, belts, springs and any other items that in the company's sole judgment is a wear item.

IN ORDER FOR WARRANTIES TO BE PROCESSED, PRODUCT WARRANTY REGISTRATION MUST BE FILED WITH BUSH HOG THROUGH THE SELLING DEALER.

Retain original purchase receipt and record the model number, serial number and date of purchase. This information will be helpful to your dealer if parts or services are required.

MODEL NUMBER _____
SERIAL NUMBER _____
DATE OF PURCHASE _____

NO EMPLOYEE OR REPRESENTATIVE OF BUSH HOG IS AUTHORIZED TO CHANGE THIS LIMITED WARRANTY IN ANY WAY OR GRANT ANY OTHER WARRANTY UNLESS SUCH CHANGE IS MADE IN WRITING AND SIGNED BY BUSH HOG'S SERVICE MANAGER, 2501 GRIFFIN AVE., SELMA, AL. 36703

TABLE OF CONTENTS
RAZORBACK SERIES ROTARY CUTTERS
BH114, BH115, BH116

DESCRIPTION.....PAGE NUMBER
Tail Wheel Assembly 126-1-1
Base Frame and Related Parts All Models .....126-1-2 & 126-1-3
Lift Frame, Tail Wheel Frame and Related Parts All Models.....126-1-4 & 126-1-5
Front Chain Assemblies (Option).....126-1-6
Gearbox Assembly BH114 Models .....126-2-1 & 126-2-5
Gearbox Assembly BH115 Models .....126-2-6 & 126-2-10
Gearbox Assembly BH116 Models.....126-2-11 & 126-2-15
Driveshaft Assy. (Slip Clutch Protected) BH114, BH115, BH116 Models 126-3-1
Driveshaft Assy. (Shear Bolt Protected) BH114, BH115, BH116 Models.....126-3-2
Quick Hitch Kit (Option) 126-4-1

TAILWHEEL ASSEMBLY
BH100 SERIES
MODELS BH114, BH115, BH116

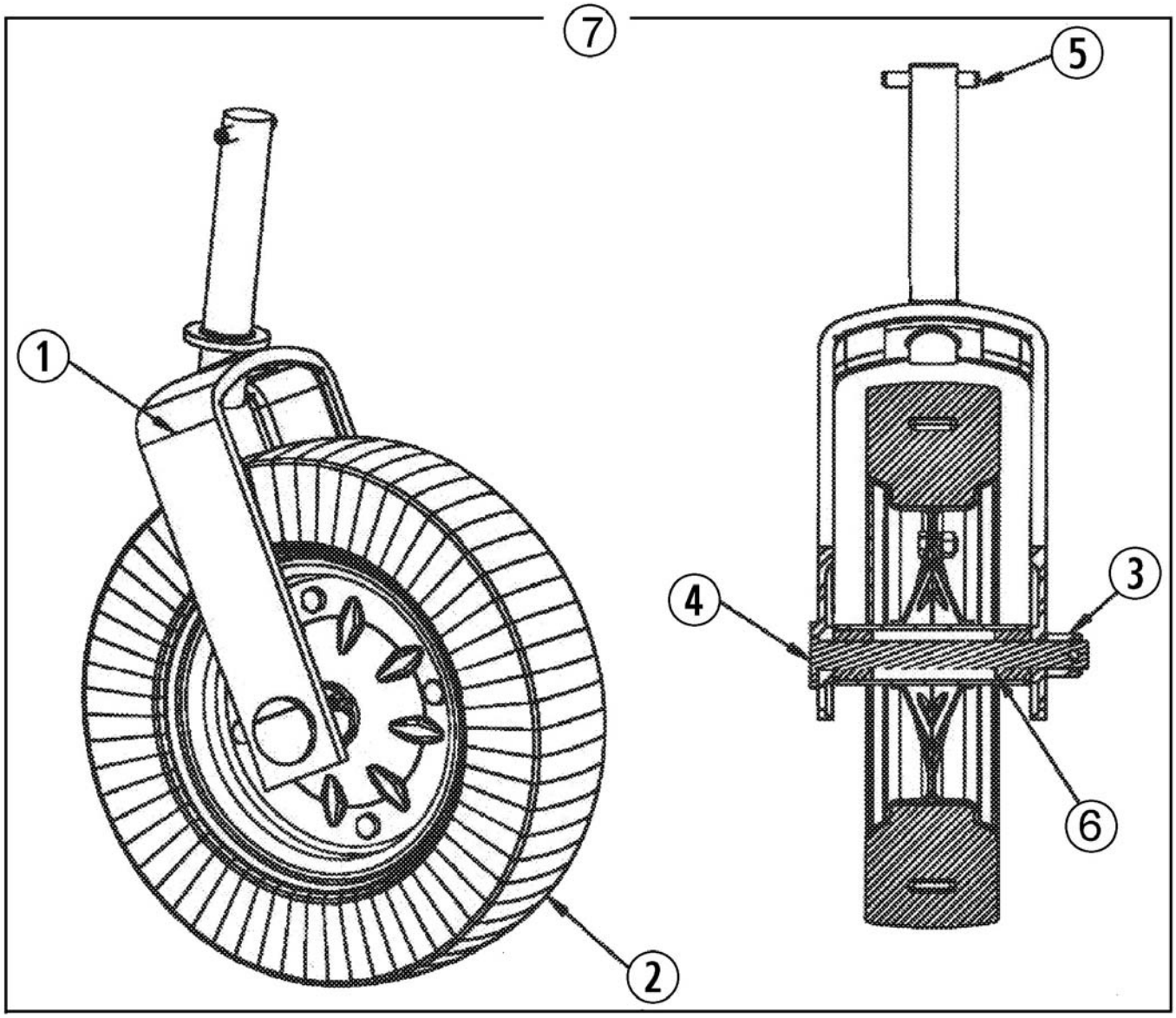

REF. NO.	PART NO.	DESCRIPTION	QTY.
1	50076499	Fork	1
2	50076500	Wheel and Tire Assy.	1
3	45189BH	Locknut 3/4” NF	1
4	50076502	Bolt, Flathead	1
5	50076503	Roll Pin m10 x 63	1
6	50076505	Bushing, Sintered	2
7	50076498	Tailwheel Assembly	1

© 2019 Alamo Group Inc.

BASE FRAME AND RELATED PARTS
BH100 SERIES
MODEL BH114, BH115, BH116

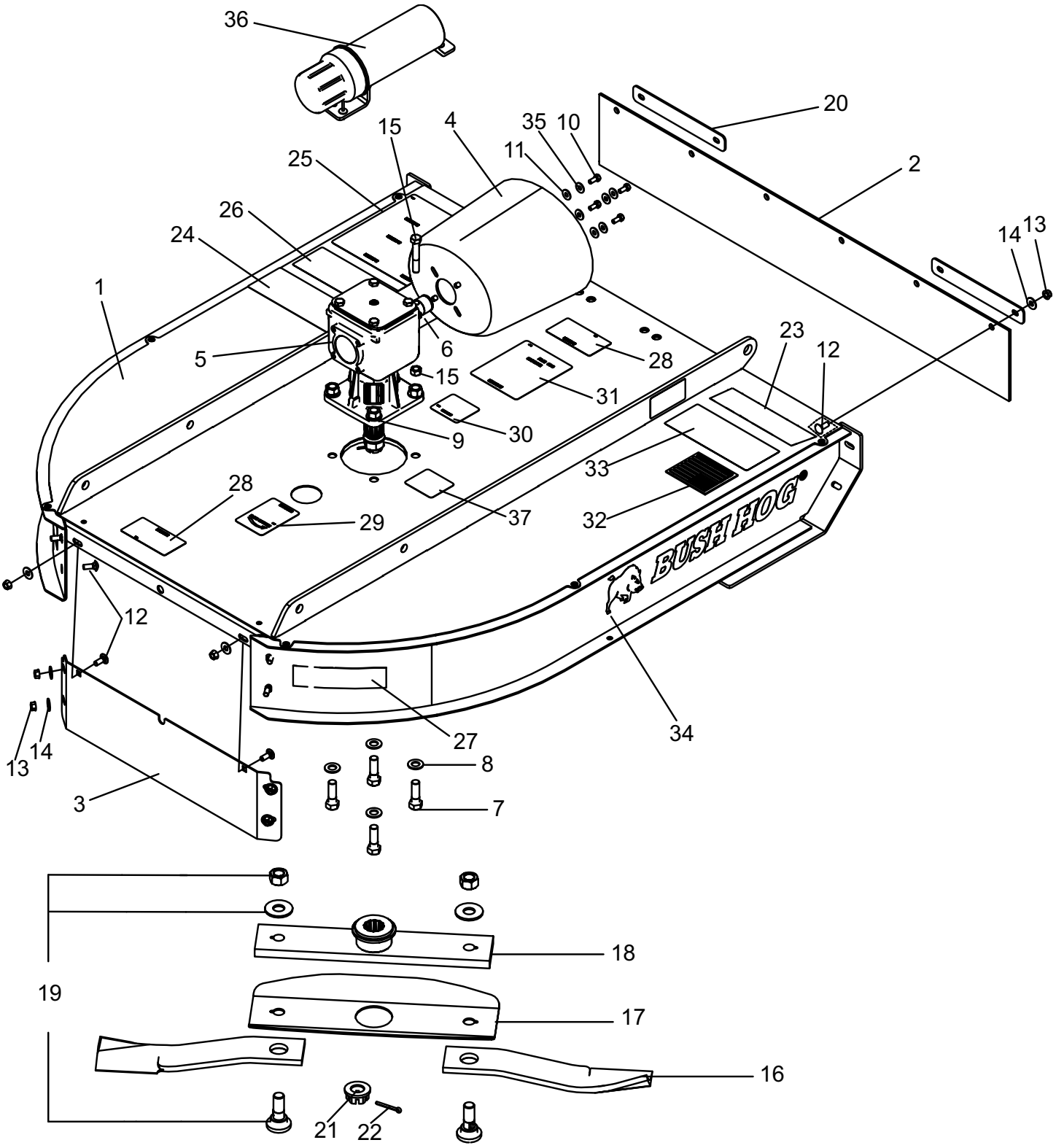

© 2019 Alamo Group Inc.

BASE FRAME AND RELATED PARTS
BH100 SERIES
MODEL BH114, BH115, BH116

REF. NO.	PART NO.	DESCRIPTION	QTY. REQ'D.	NOTES
1	-----	Deck Weldment, BH114	1	
	-----	Deck Weldment, BH115	1	
	-----	Deck Weldment, BH116	1	
2	50080938	Belting, Front BH114	1	
	50080949	Belting, Front BH115	1	
	50080959	Belting, Front BH116	1	
3	50080915	Band, Rear	1	
4	50075248	Safety Shield	1	For Shear Bolt Protected Drivelines
	81592	Safety Shield	1	For Slip Clutch Protected Drivelines
5	50081060	Gearbox Assembly, BH114	1	
	50081061	Gearbox Assembly, BH115	1	
	50081062	Gearbox Assembly, BH116	1	
6	50035829	Tube, Owners Manual	1	
7	20206	Capscrew 5/8" x 2" Gr.8 ZP	4	
8	20748	Flatwasher 5/8" SAE	4	
9	20414	Locknut 5/8"Gr. C CP Flng	4	
10	90560	Capscrew M8 x 1.25 x 15 G8.8 ZP w/Patch	4	
11	44216	Flatwasher M8 ZP	4	
12	44109BH	Carriage Bolt 3/8" x 1" Gr.5	12	
13	15583	Locknut 3/8",Flanged	12	
14	15915BH	Flatwasher 3/8"	12	
15	50074654	Shear Bolt Package	1	Contains 5 Bolts & Nuts
16	50074580	Blade 1/2" x 3" x 14-3/4"	2	Uplift CCW Rotation
	50074581	Blade 1/2" x 3" x 20-3/4"	2	Uplift CCW Rotation
	50074582	Blade 1/2" x 3" x 26-3/4"	2	Uplift CCW Rotation
17	50080913	Blade Wing	1	
18	50080909	Blade Bar Weldment	1	
19	00786548	Blade Bolt Kit	1	
	00781320	Blade Bolt 7/8"	2	
	00761535	Washer 7/8"	2	
	00750226	Locknut, Toplock 7/8" NF	2	
20	50080977	Belt Plate, BH114	2	
	50080978	Belt Plate, BH115	2	
	50080979	Belt Plate, BH116	2	
21	70694	Castle Nut	1	
22	70699	Cotter Pin	1	
23	50080994	Model Decal, BH114	1	
	50080995	Model Decal, BH115	1	
	50080996	Model Decal, BH116	1	
	50074690	Decal Kit	1	Items 24-33
24	D590	Decal, Lubrication	1	
25	D549	Decal, Danger Operation	1	
26	D813	Decal, Danger Multilignual	1	
27	50031214	Decal, Red Reflector	2	
28	D614	Decal, Thrown Object	2	
29	D551	Decal, Rotation CCW	1	
30	D546	Decal, Danger Guard Missing	1	
31	D547	Decal, Danger	1	
32	50074259	Decal, Flag	1	
33	D559	Decal, Genuine Bush Hog	1	
34	50077452	Decal, Bush Hog Logo	2	
35	44311BH	Lockwasher M8 ZP	4	
36	50035829	Owners Manual Tube	1	
37	50081789	Decal, 10 Year Gearbox Warranty	1	

© 2019 Alamo Group Inc.

LIFT FRAME, TAILWHEEL FRAME and RELATED PARTS
BH100 SERIES
MODEL BH114, BH115, BH116

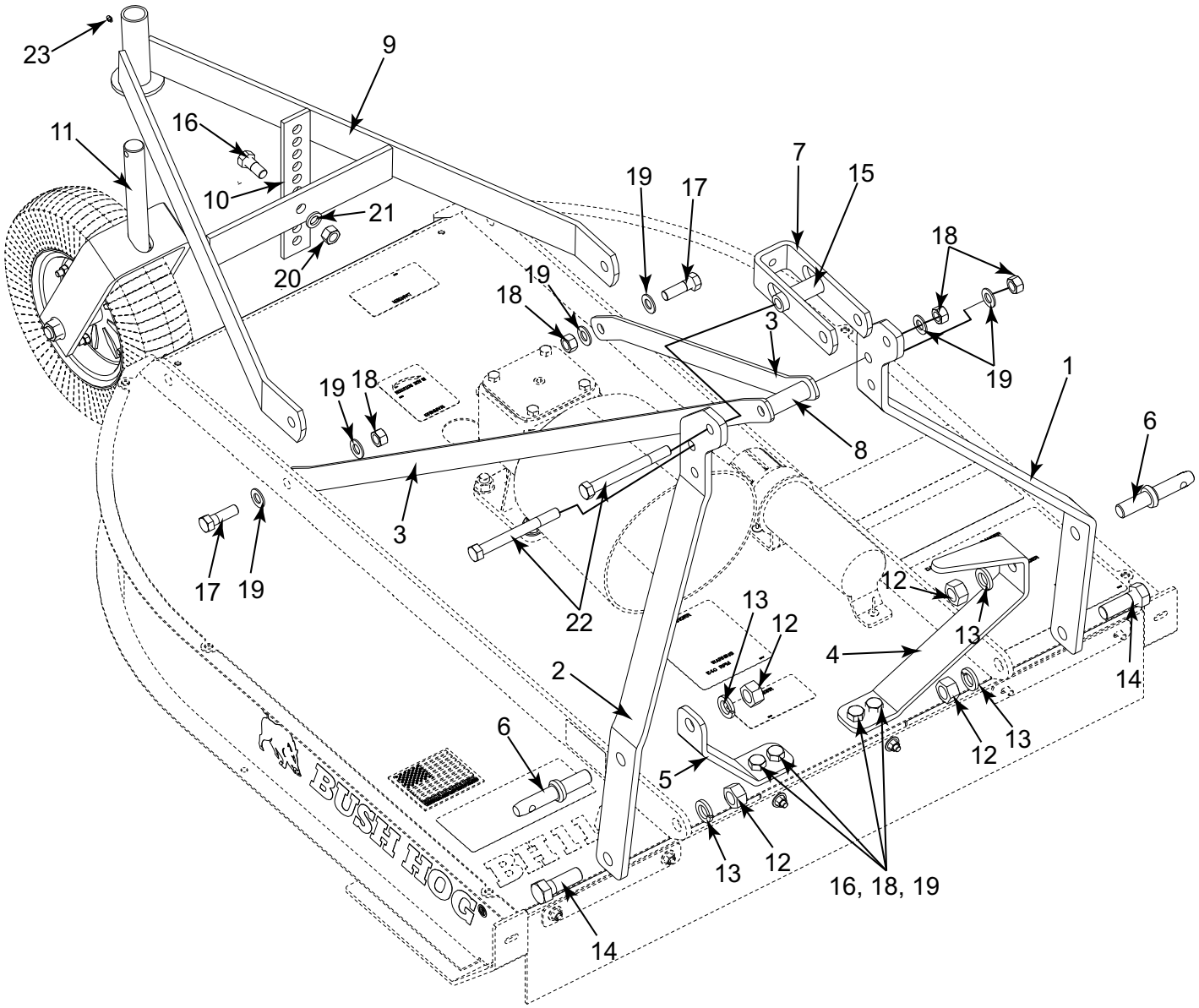

© 2019 Alamo Group Inc.

LIFT FRAME, TAILWHEEL FRAME and RELATED PARTS
BH100 SERIES
MODEL BH114, BH115, BH116

REF. NO.	PART NO.	DESCRIPTION	QTY. REQ'D.	NOTES
1	50081938	Strut, "A" Frame LH	1	
2	50081937	Strut, "A" Frame RH	1	
3	50080924	Strut, BH114	2	
	50080948	Strut, BH115	2	
	50080958	Strut, BH116	2	
4	50080922	Brace, LH Strut	1	
5	50080920	Brace, RH Strut	1	
6	63765	Lift Pin (Cat. I)	2	
7	64114	Flex Link (Cat I)	1	
8	64113	Pivot Tube	1	
9	50074636	Tailwheel Frame Weldment	1	
10	81396	Link, Tailwheel	1	
11	50076498	ECO Tailwheel Assembly W/Cap	1	(See Tailwheel Assy.)
12	44061BH	Hex Nut7/8" NF	2	
13	15824	Lockwasher7/8"	4	
14	44929BH	Capscrew 7/8" x 2-1/2" NF Gr.5	2	
15	50080980	Bushing, (1.125 x .688 x 3.69L)	4	
16	20501	Capscrew 5/8" x 1-1/2"	4	
17	20947	Capscrew 5/8" x 2" Gr.5	2	
18	15598BH	Locknut 5/8"	8	
19	20748	Flatwasher 5/8" SAE	10	
20	15563	Hex Nut 5/8"	2	
21	19486	Lockwasher 5/8"	2	
22	20923	Capscrew5/8" x 6" Gr. 5	2	
23	449BH	Fitting, Grease 1/4"- 28	1	

© 2019 Alamo Group Inc.

FRONT CHAIN ASSEMBLIES
BH100 SERIES
MODEL BH114, BH115, BH116

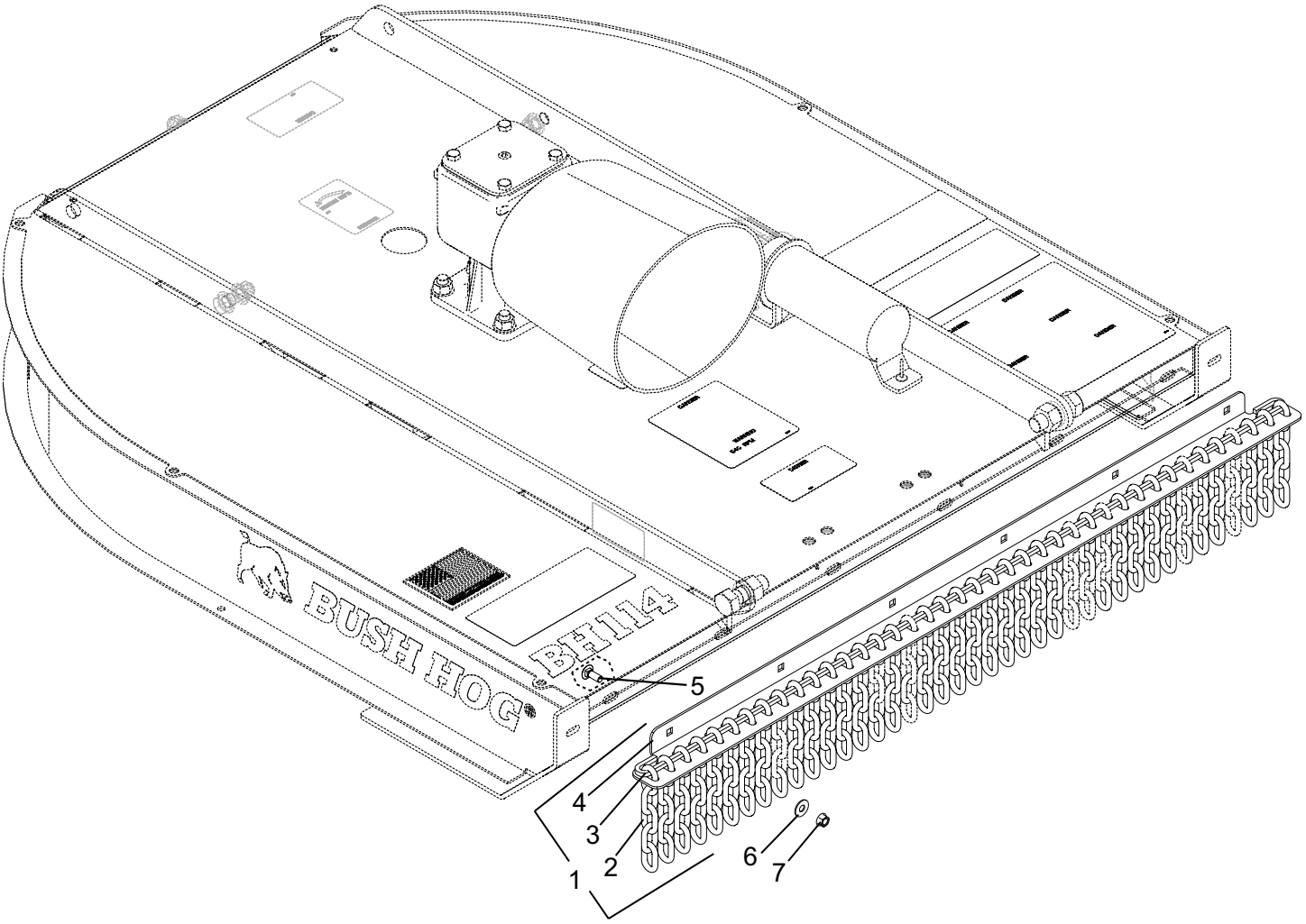

REF. NO.	PART NO.	DESCRIPTION	QTY. REQ'D.	NOTES
1	50080962	Front Chain Assembly, BH114	1	
	50080967	Front Chain Assembly, BH115	1	
	50080972	Front Chain Assembly, BH116	1	
2	50017264	Chains, 5 Links, BH114	40	
	50017264	Chains, 5 Links, BH115	49	
	50017264	Chains, 5 Links, BH116	59	
3	50080964	Retainer Rod, Front, BH114	1	
	50070149	Retainer Rod, Front, BH115	1	
	50070049	Retainer Rod, Front, BH116	1	
4	-----	Chain Bracket, Front	1	
5	44109BH	Carriage Bolt, 3/8" x 1" Gr. 5	6	
6	15915BH	Flatwasher, 3/8"	6	
7	15812	Lockwasher, 3/8"	6	

© 2019 Alamo Group Inc.

GEARBOX ASSEMBLY
MFG. BY COMER
(9.211.858.00.BC)
BH100 SERIES
MODEL BH114

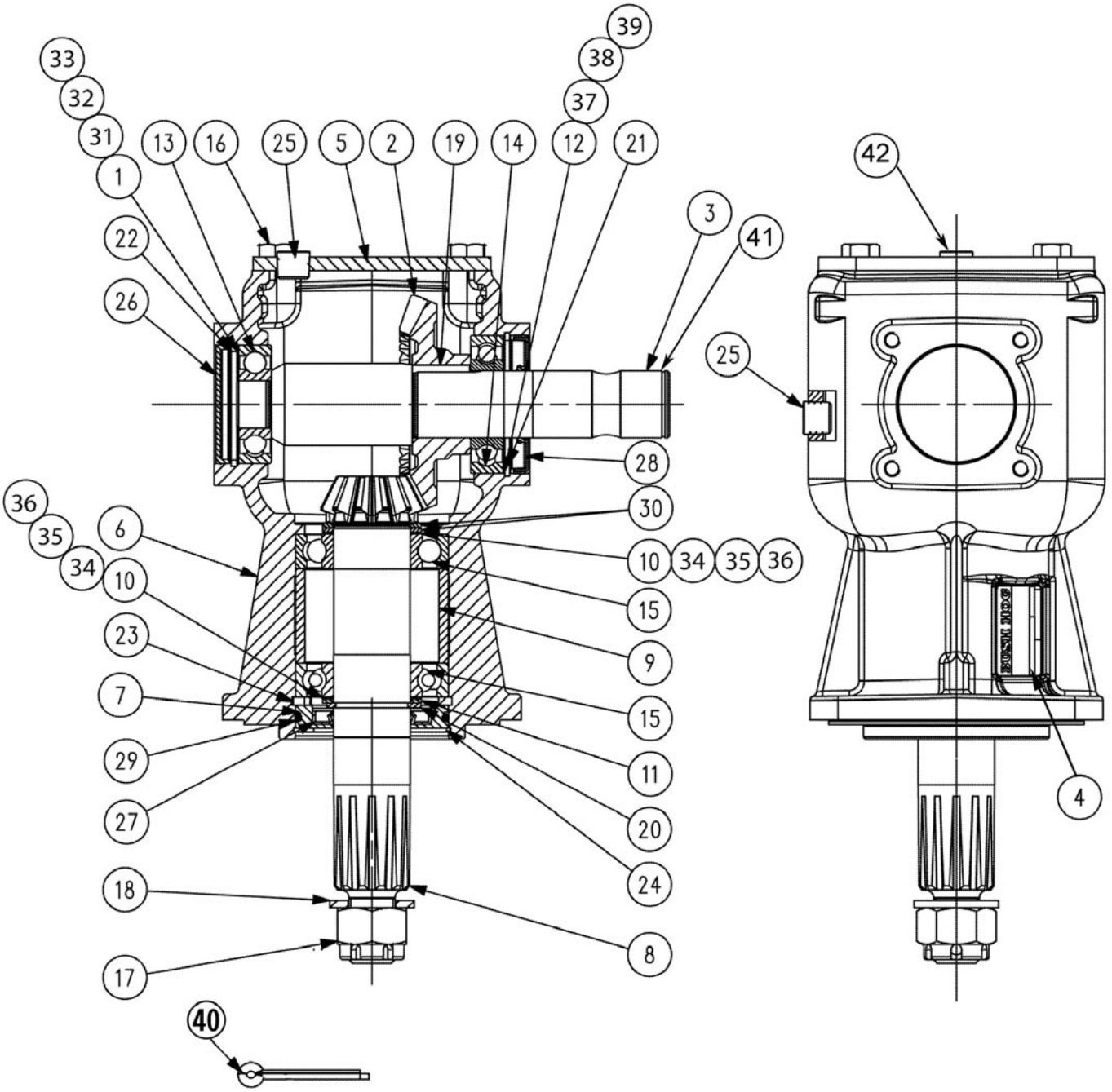

© 2019 Alamo Group Inc.

GEARBOX ASSEMBLY
MFG. BY COMER
(9.211.858.00.BC)
BH100 SERIES
MODEL BH114

REF. NO.	PART NO.	DESCRIPTION	QTY. REQ'D.	NOTES
	50081060	**Gearbox Assembly**	**1**	
1	-----	Shim (55.3 x 61.7 x 0.3)	1	
2	50025327	Crown Wheel Z30 M3.8	1	
3	50078585	Shaft	1	
4	-----	Bush Hog Name Plate	1	
5	50078586	Cover	1	
6	50078587	Casing	1	
7	50078588	Cover	1	
8	50078589	Pinion Shaft Forged Z12 M3.8	1	
9	50078590	Spacer 69.9 x 79.8 x 49.5	1	
10	70337	Shim (40.3 x 51.5 x 0.3)	2	
11	50078591	Shim (40.3 x 51.5 x 2.0)	1	
12	70639	Shim (60.3 x 71.7 x 0.3)	1	
13	70382	Ball Bearing 6305	1	
14	70229	Ball Bearing 6207	1	
15	70256	Ball Bearing 6208	2	
16	70618	Bolt HH M10 x 20 UNI 5739 8.8	4	
17	70694	Castle Nut M24 x 2PR80B	1	
18	70695	Bolt Washer 25 x 44 x 4	1	
19	70226	Parallel Key B 10 x 8 x 30	1	
20	70250	Snap Ring Shaft D40 DIN 471	1	
21	70133	Snap Ring Hole 72 UNI 7437	1	
22	50044136	Snap Ring 62 UNI 7438	1	
23	70877	Snap Ring 80 DIN 472	1	
24	50078592	Snap Ring SB 80	1	
25	70181	Plug 3/8" Gas	2	
26	50046988	Cap 62 x 7	1	
27	50078593	Oil Seal Dust Lip 40 x 62 x 7 NBR	1	
28	70134	Dust Lip Bauslx2 35 x 72 x 10/7 NBR	1	
29	50078594	O-ring OR-176 D72.62 x 3.53	1	
30	70293	Shim (40.3 x 51.5 x 2.5)	2	
31	-----	Shim (55.3 x 61.7 x 0.4)	1	
32	-----	Shim (55.3 x 61.7 x 0.5)	1	
33	-----	Shim (55.3 x 61.7 x 1.0)	1	
34	70338	Shim (40.3 x 51.5 x 0.4)	2	
35	70339	Shim (40.3 x 51.5 x 0.5)	2	
36	70340	Shim (40.3 x 51.5 x 1.0)	2	
37	70640	Shim (60.3 x 71.7 x 0.4)	1	
38	70641	Shim (60.3 x 71.7 x 0.5)	1	
39	70642	Shim (60.3 x 71.7 x 1.0)	1	
40	70699	Cotter Pin B5 x 50 UNI 1336	1	
41	81445	External Retain Ring	1	
42	81572	Vent Plug Assembly	1	

© 2019 Alamo Group Inc.

GEARBOX ASSEMBLY
MFG. BY COMER
(9.211.858.10.BC)
BH100 SERIES
MODEL BH114

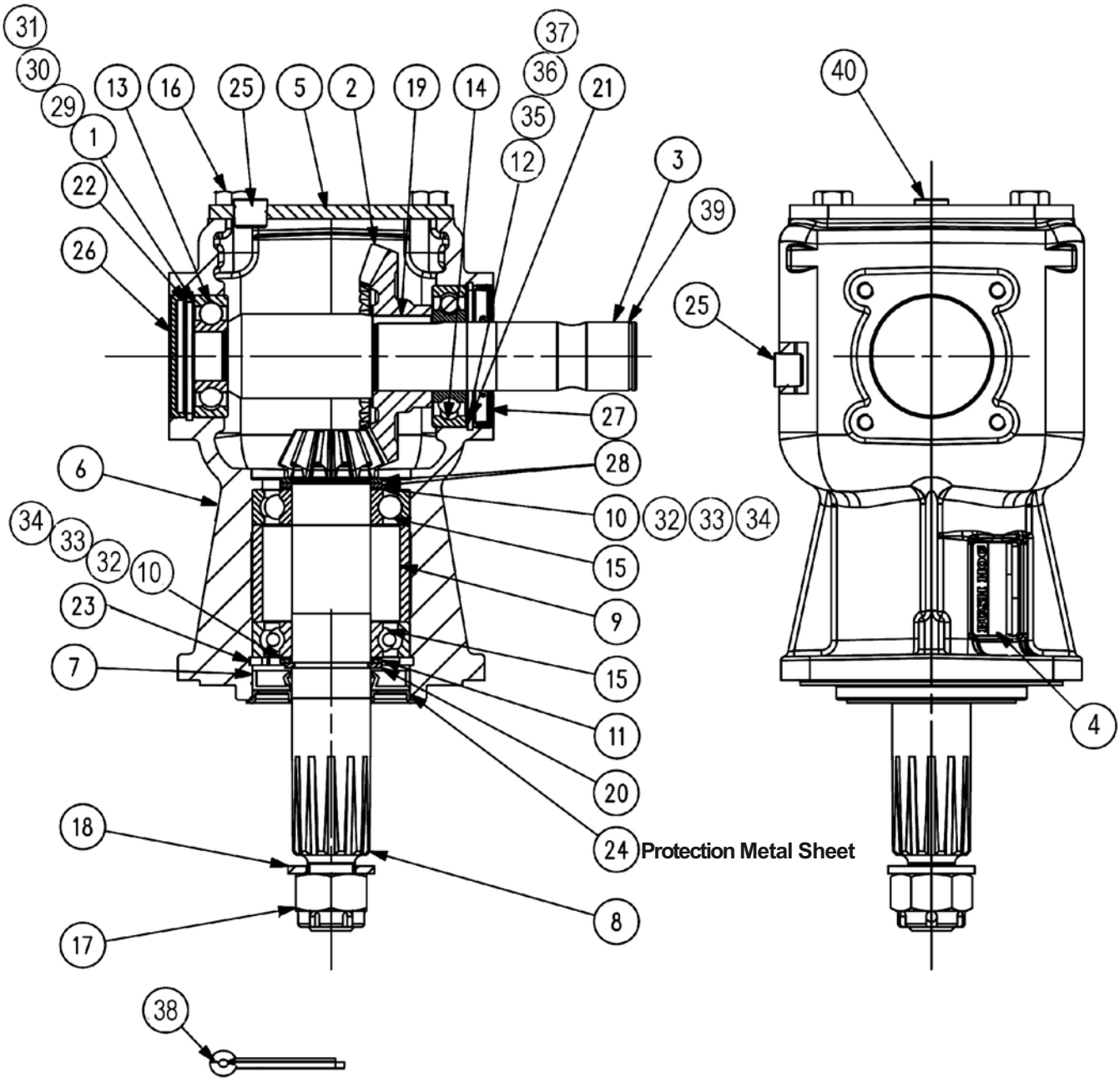

© 2019 Alamo Group Inc.

GEARBOX ASSEMBLY
MFG. BY COMER
(9.211.858.10.BC)
BH100 SERIES
MODEL BH114

REF. NO.	PART NO.	DESCRIPTION	QTY. REQ'D.	NOTES
	50081060	**Gearbox Assembly**	**1**	
1	-----	Shim (55.3 x 61.7 x 0.3)	1	
2	50025327	Crown Wheel Z30 M3.8	1	
3	50078585	Shaft	1	
4	-----	Bush Hog Name Plate	1	
5	50078586	Cover	1	
6	-----	Casing	1	
7	50080256	Double Lip Seal, 40 x 80 x 10	1	
8	50078589	Pinion Shaft Forged Z12 M3.8	1	
9	50078590	Spacer 69.9 x 79.8 x 49.5	1	
10	70337	Shim (40.3 x 51.5 x 0.3)	2	
11	50078591	Shim (40.3 x 51.5 x 2.0)	1	
12	70639	Shim (60.3 x 71.7 x 0.3)	1	
13	70382	Ball Bearing 6305	1	
14	70229	Ball Bearing 6207	1	
15	70256	Ball Bearing 6208	2	
16	70618	Bolt HH M10 x 20 UNI 5739 8.8	4	
17	70694	Castle Nut M24 x 2PR80B	1	
18	70695	Bolt Washer 25 x 44 x 4	1	
19	70226	Parallel Key B 10 x 8 x 30	1	
20	70250	Snap Ring Shaft D40 DIN 471	1	
21	70133	Snap Ring Hole 72 UNI 7437	1	
22	50044136	Snap Ring 62 UNI 7438	1	
23	70877	Snap Ring 80 DIN 472	1	
24	50080257	Protection Metal Sheet	1	
25	70181	Plug 3/8" Gas	2	
26	50046988	Cap 62 x 7	1	
27	70134	Dust Lip Bauslx2 35 x 72 x 10/7 NBR	1	
28	70293	Shim (40.3 x 51.5 x 2.5)	2	
29	-----	Shim (55.3 x 61.7 x 0.4)	1	
30	-----	Shim (55.3 x 61.7 x 0.5)	1	
31	-----	Shim (55.3 x 61.7 x 1.0)	1	
32	70338	Shim (40.3 x 51.5 x 0.4)	2	
33	70339	Shim (40.3 x 51.5 x 0.5)	2	
34	70340	Shim (40.3 x 51.5 x 1.0)	2	
35	70640	Shim (60.3 x 71.7 x 0.4)	1	
36	70641	Shim (60.3 x 71.7 x 0.5)	1	
37	70642	Shim (60.3 x 71.7 x 1.0)	1	
38	70699	Cotter Pin B5 x 50 UNI 1336	1	
39	81445	External Retain Ring	1	
40	81572	Vent Plug Assembly	1	

© 2019 Alamo Group Inc.

GEARBOX ASSEMBLY
MFG. BY B&P
BH100 SERIES
MODEL BH114

NOTE: Use this page if your Gearbox has Bolt-on Bearing Covers.

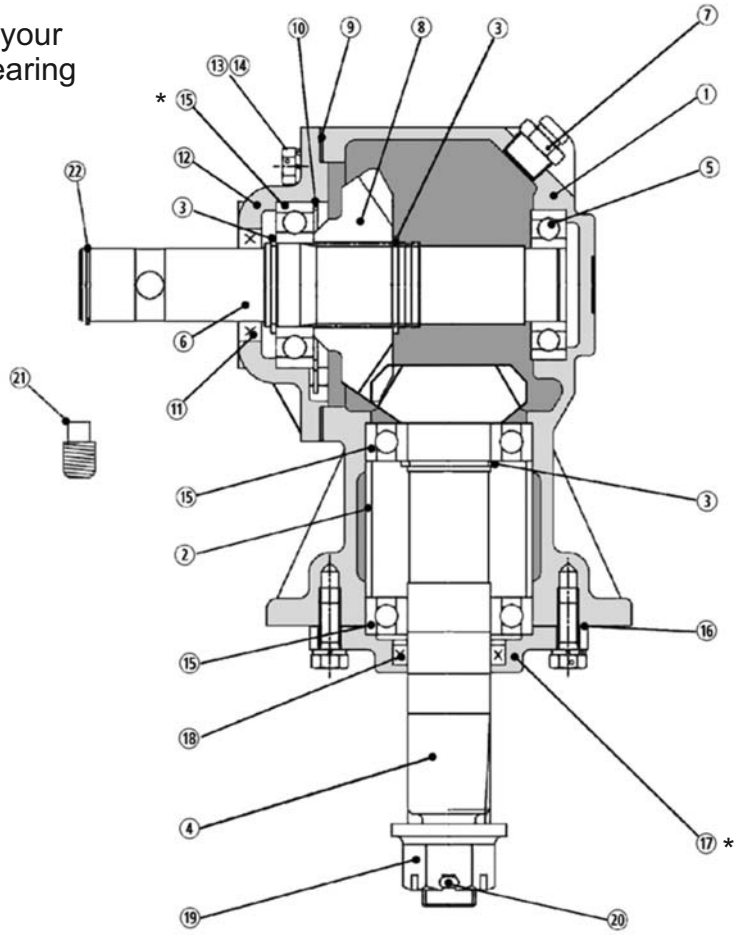

REF. NO.	PART NO.	DESCRIPTION	QTY. REQ'D.	NOTES
	50075165	Gearbox Assembly	1	see note
1	N/A	Housing	1	
2	81630	Spacer	1	
3	81631	Retaining Ring	3	
4	50075908	Pinion	1	
5	70229	Bearing Assy.	1	
6	81634	Shaft, Input	1	
7	88851	Plug, Pressure Relief	1	
8	50075892	Gear, Input	1	
9	50052055	Shim, .50mm	1	
	50052053	Shim, .15mm	1	
	50052054	Shim, .30mm	1	
10	81637	Retaining Ring	1	
11	88879	Seal	1	
12	50029491	Cap	1	
13	20034	Capscrew 3/8" x 1' Gr.5	10	
14	15812	Lockwasher 3/8"	10	
15	70256	Bearing Assy.	3	
16	50077196	Gasket, Y3034 Bottom, T=0.2MM	1	
	50077197	Gasket, Y3034 Bottom, T=0.3MM	1	
	50052056	Gasket, .15mm	1	
	50052057	Gasket, .30mm	1	
17	81643	Cap	1	
18	81644	Seal	1	
19	88873	Hex Nut, Slotted 1"	1	
20	81648	Cotter Pin	1	
21	69BH	Pipe Plug	1	
22	81445	Snap Ring, Driveline Retainer	1	

© 2019 Alamo Group Inc.

GEARBOX ASSEMBLY
BH100 SERIES
MFG. BY COMER
(9.211.854.00.BC)
MODEL BH115

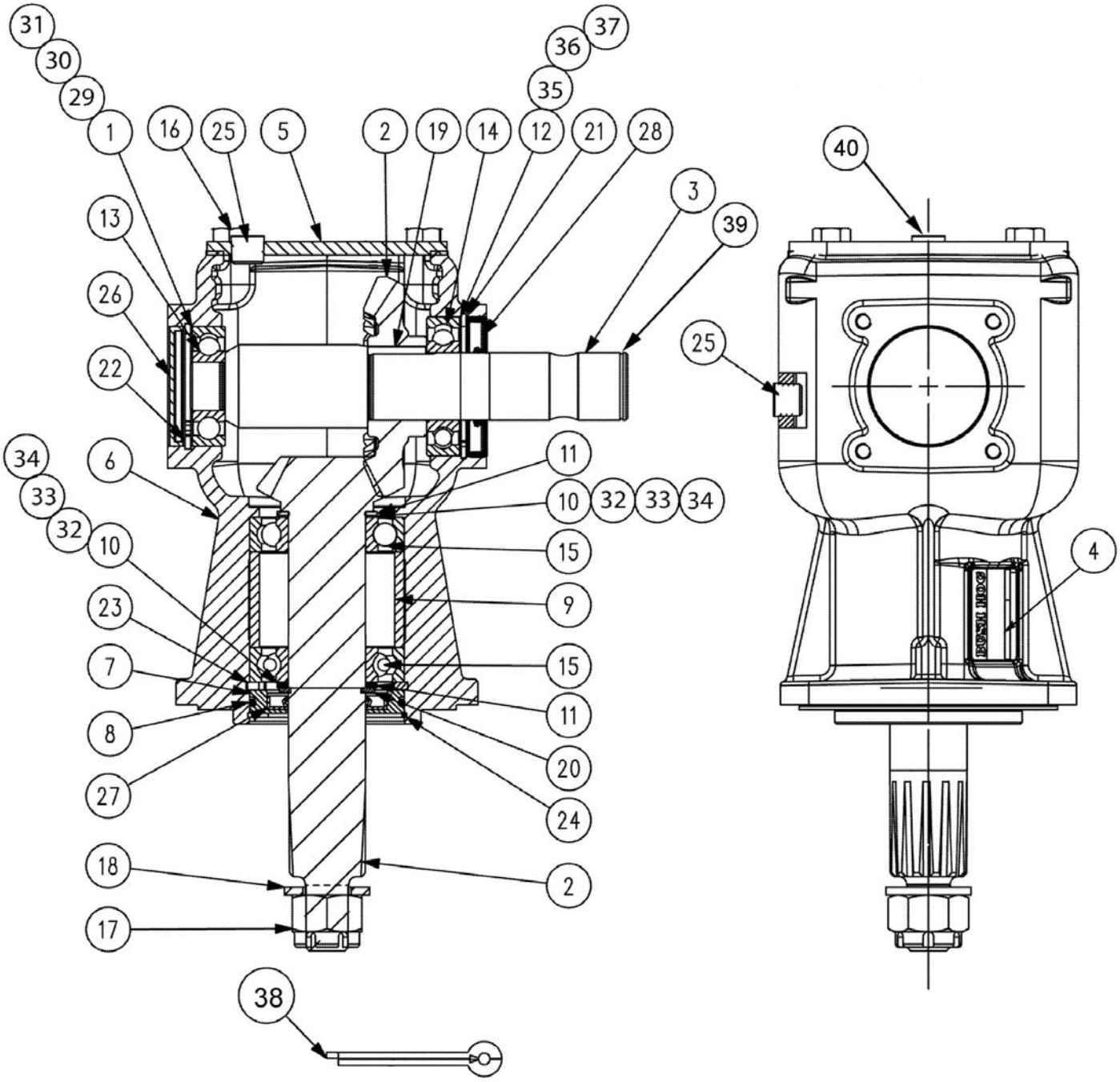

© 2019 Alamo Group Inc.

GEARBOX ASSEMBLY
BH100 SERIES
MFG. BY COMER
(9.211.854.00.BC)
MODEL BH115

REF. NO.	PART NO.	DESCRIPTION	QTY. REQ'D.	NOTES
	50081061	**Gearbox Assembly**	**1**	
1	-----	Shim (55.3 x 61.7 x 0.3)	1	
2	50078595	Bevel Gear Set Z12-Z23 M5	1	
	-----	Bevel Gear Forged M5 Z23	1	
	-----	Bevel Gear Forged M5 Z12	1	
3	50078585	Shaft	1	
4	-----	Bush Hog Name Plate	1	
5	50078586	Cover	1	
6	50078587	Casing	1	
7	50078588	Cover	1	
8	50078594	O-Ring OR-176 D72.62 x 3.53	1	
9	50078590	Spacer 69.9 x 79.8 x 49.5	1	
10	70337	Shim (40.3 x 51.5 x 0.3)	2	
11	50078591	Shim (40.3 x 51.5 x 2.0)	2	
12	70639	Shim (60.3 x 71.7 x 0.3)	1	
13	70382	Ball Bearing 6305	1	
14	70229	Ball Bearing 6207	1	
15	70256	Ball Bearing 6208	2	
16	70618	Bolt HH M10 x 20 UNI 5739 8.8	4	
17	70694	Castle Nut M24 x 2PR80B	1	
18	70695	Bolt Washer 25 x 44 x 4	1	
19	70226	Parallel Key B 10 x 8 x 30	1	
20	70250	Snap Ring Shaft D40 DIN 471	1	
21	70133	Snap Ring Hole 72 UNI 7437	1	
22	50044136	Snap Ring 62 UNI 7438	1	
23	70877	Snap Ring 80 DIN 472	1	
24	50078592	Snap Ring SB 80	1	
25	70181	Plug 3/8" Gas	2	
26	50046988	Cap 62 x 7	1	
27	50078593	Oil Seal Dust Lip 40 x 62 x 7 NBR	1	
28	70134	Dust Lip Bauslx2 35 x 72 x 10/7 NBR	1	
29	-----	Shim (55.3 x 61.7 x 0.4)	1	
30	-----	Shim (55.3 x 61.7 x 0.5)	1	
31	-----	Shim (55.3 x 61.7 x 1.0)	1	
32	70338	Shim (40.3 x 51.5 x 0.4)	2	
33	70339	Shim (40.3 x 51.5 x 0.5)	2	
34	70340	Shim (40.3 x 51.5 x 1.0)	2	
35	70640	Shim (60.3 x 71.7 x 0.4)	1	
36	70641	Shim (60.3 x 71.7 x 0.5)	1	
37	70642	Shim (60.3 x 71.7 x 1.0)	1	
38	70699	Cotter Pin B5 x 50 UNI 1336	1	
39	81445	External Retain Ring	1	
40	81572	Vent Plug Assembly	1	

© 2019 Alamo Group Inc.

GEARBOX ASSEMBLY
BH100 SERIES
MFG. BY COMER
(9.211.854.10.BC)
MODEL BH115

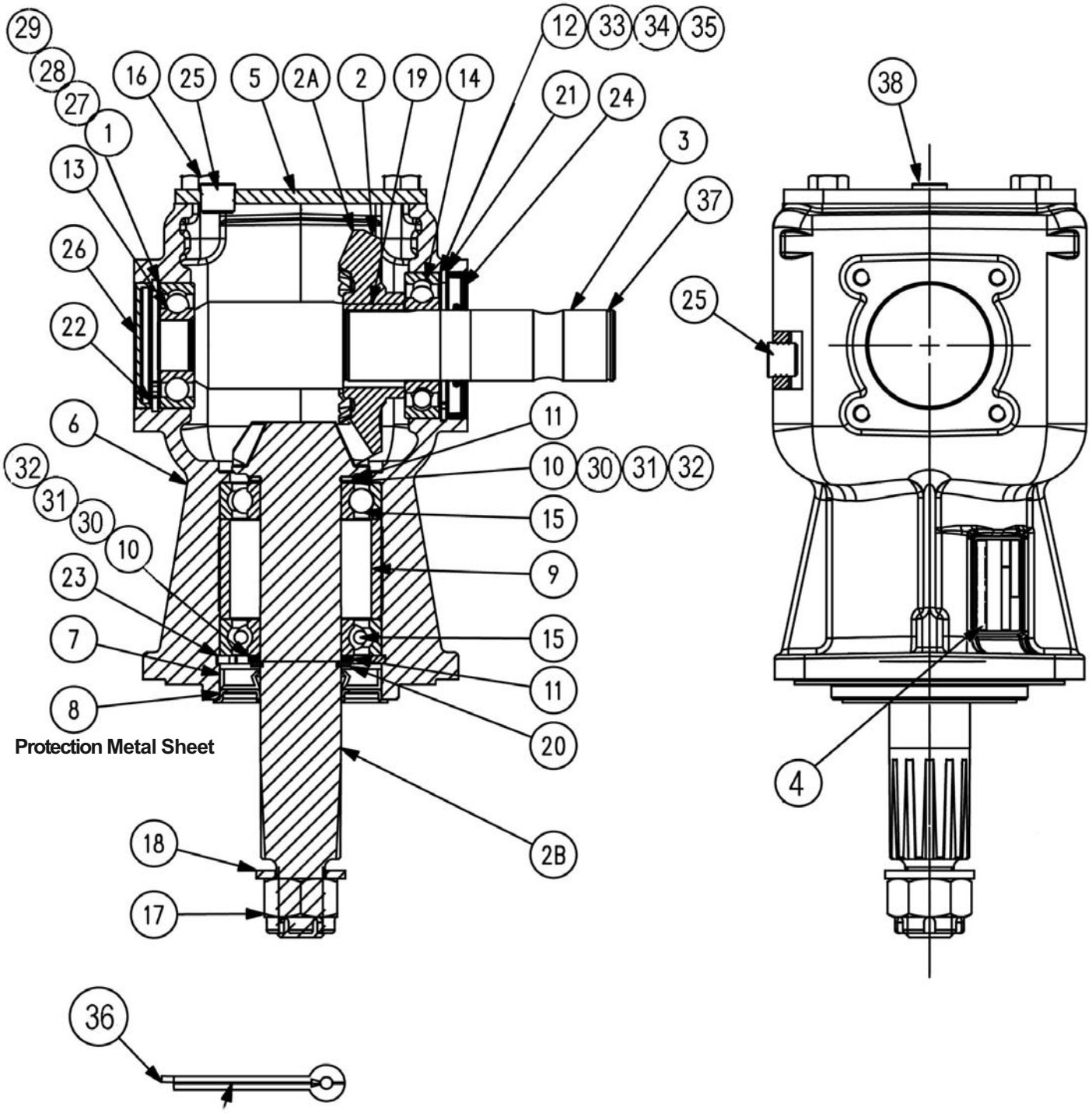

© 2019 Alamo Group Inc.

GEARBOX ASSEMBLY
BH100 SERIES
MFG. BY COMER
(9.211.854.10.BC)
MODEL BH115

REF. NO.	PART NO.	DESCRIPTION	QTY. REQ'D.	NOTES
	50081061	**Gearbox Assembly**	**1**	
1	-----	Shim (55.3 x 61.7 x 0.3)	1	
2	50078595	Bevel Gear Set Z12-Z23 M5	1	
2A	-----	Bevel Gear Forged M5 Z23	1	
2B	-----	Bevel Gear Forged M5 Z12	1	
3	50078585	Shaft	1	
4	-----	Bush Hog Name Plate	1	
5	50078586	Cover	1	
6	-----	Casing	1	
7	50080256	Double Lip Seal, 40 x 80 x 10	1	
8	50080257	Protection Metal Sheet	1	
9	50078590	Spacer 69.9 x 79.8 x 49.5	1	
10	70337	Shim (40.3 x 51.5 x 0.3)	2	
11	50078591	Shim (40.3 x 51.5 x 2.0)	2	
12	70639	Shim (60.3 x 71.7 x 0.3)	1	
13	70382	Ball Bearing 6305	1	
14	70229	Ball Bearing 6207	1	
15	70256	Ball Bearing 6208	2	
16	70618	Bolt HH M10 x 20 UNI 5739 8.8	4	
17	70694	Castle Nut M24 x 2PR80B	1	
18	70695	Bolt Washer 25 x 44 x 4	1	
19	70226	Parallel Key B 10 x 8 x 30	1	
20	70250	Snap Ring Shaft D40 DIN 471	1	
21	70133	Snap Ring Hole 72 UNI 7437	1	
22	50044136	Snap Ring 62 UNI 7438	1	
23	70877	Snap Ring 80 DIN 472	1	
24	70134	Dust Lip Bauslx2 35 x 72 x 10/7 NBR	1	
25	70181	Plug 3/8" Gas	2	
26	50046988	Cap 62 x 7	1	
27	-----	Shim (55.3 x 61.7 x 0.4)	1	
28	-----	Shim (55.3 x 61.7 x 0.5)	1	
29	-----	Shim (55.3 x 61.7 x 1.0)	1	
30	70338	Shim (40.3 x 51.5 x 0.4)	2	
31	70339	Shim (40.3 x 51.5 x 0.5)	2	
32	70340	Shim (40.3 x 51.5 x 1.0)	2	
33	70640	Shim (60.3 x 71.7 x 0.4)	1	
34	70641	Shim (60.3 x 71.7 x 0.5)	1	
35	70642	Shim (60.3 x 71.7 x 1.0)	1	
36	70699	Cotter Pin B5 x 50 UNI 1336	1	
37	81445	External Retain Ring	1	
38	81572	Vent Plug Assembly	1	

© 2019 Alamo Group Inc.

GEARBOX ASSEMBLY
MFG BY B&P
BH100 SERIES
MODEL BH115

NOTE: Use this page if your Gearbox has Bolt-on Bearing Covers.

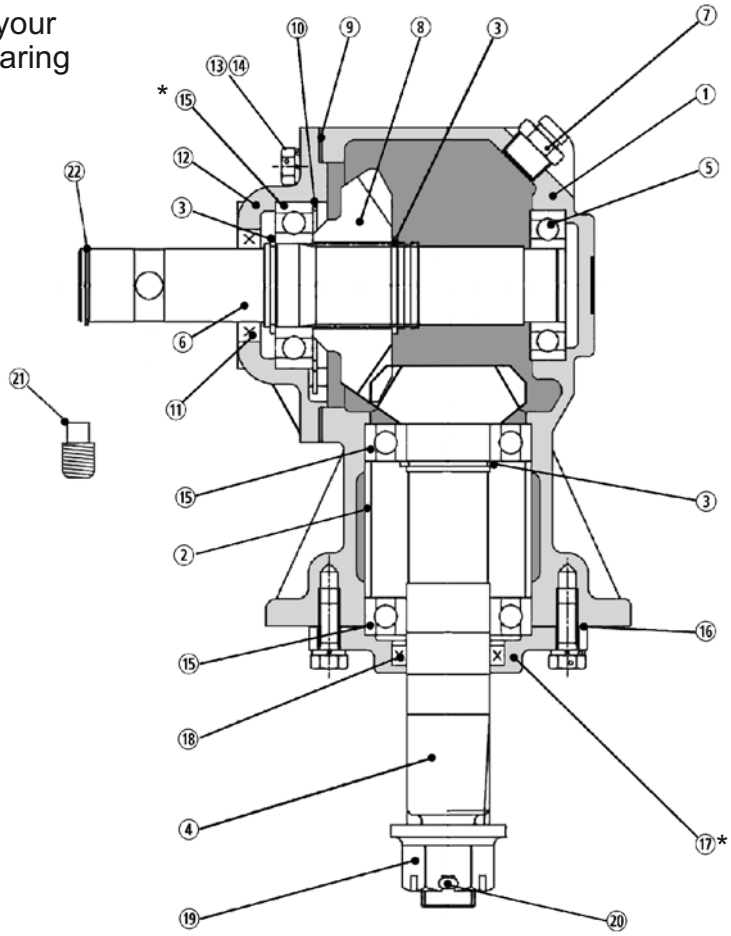

REF. NO.	PART NO.	DESCRIPTION	QTY. REQ'D.	NOTES
	50074339	Gearbox Assembly	1	see note
1	N/A	Housing	1	
2	81630	Spacer	1	
3	81631	Retaining Ring	3	
4	50074340	Pinion	1	
5	70229	Bearing Assy.	1	
6	81634	Shaft, Input	1	
7	88851	Plug, Pressure Relief	1	
8	50074341	Gear, Input 22 Teeth	1	
9	50052055	Shim, .50mm	1	
	50052053	Shim, .15mm	1	
	50052054	Shim, .30mm	1	
10	81637	Retaining Ring	1	
11	88879	Seal	1	
12	50029491	Cap	1	
13	20034	Capscrew 3/8" x 1' Gr.5	10	
14	15812	Lockwasher 3/8"	10	
15	70256	Bearing Assy.	3	
16	50077196	Gasket, Y3034 Bottom, T=0.2MM	1	
	50077197	Gasket, Y3034 Bottom, T=0.3MM	1	
	50052056	Gasket, .15mm	1	
	50052057	Gasket, .30mm	1	
17	81643	Cap	1	
18	81644	Seal	1	
19	88873	Hex Nut, Slotted 1"	1	
20	81648	Cotter Pin	1	
21	69BH	Pipe Plug	1	
22	81445	Snap Ring, Driveline Retainer	1	

© 2019 Alamo Group Inc.

GEARBOX ASSEMBLY
BH100 SERIES
MFG BY COMER
(9.211.853.00.BC)
MODEL BH116

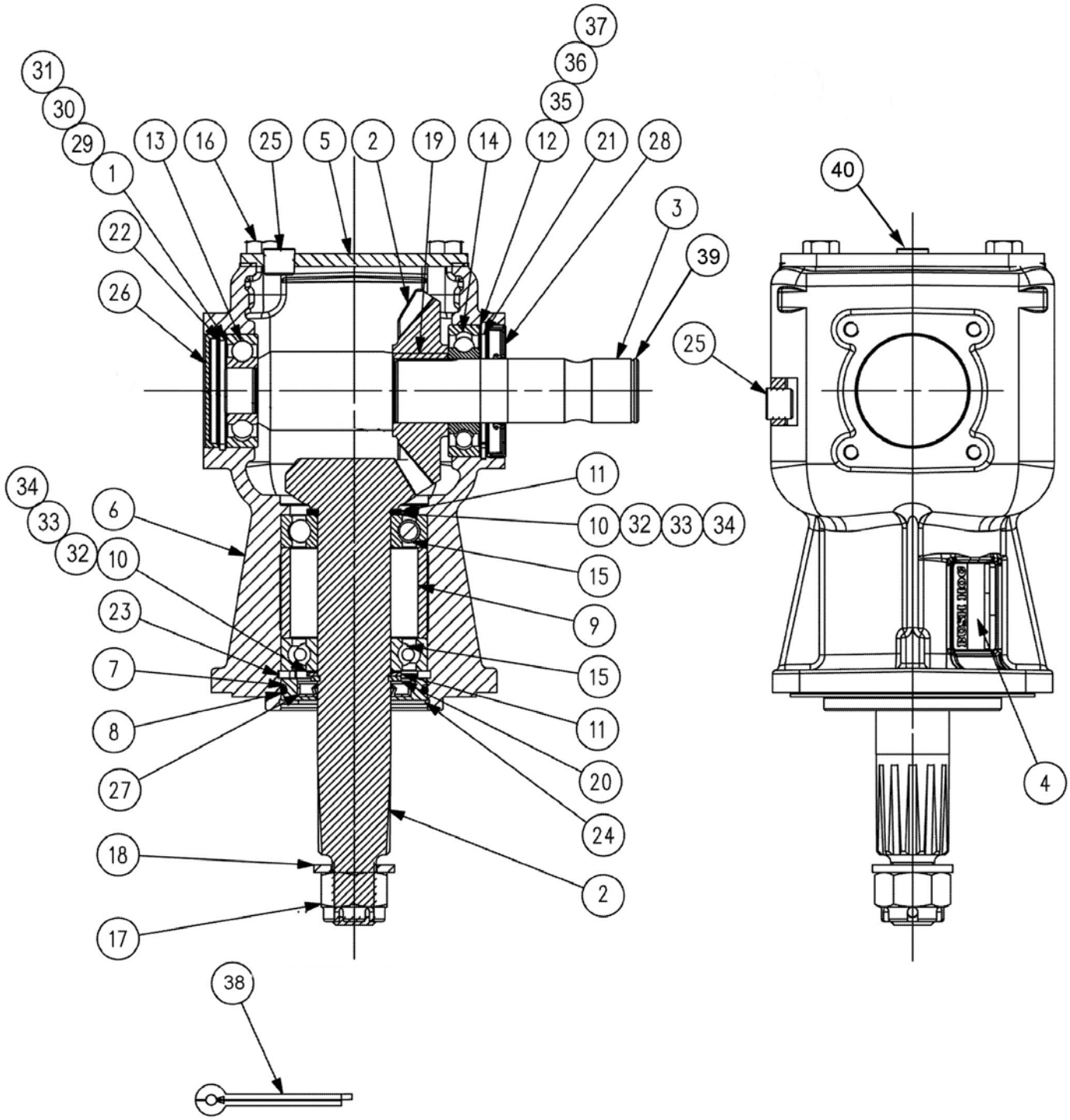

© 2019 Alamo Group Inc.

GEARBOX ASSEMBLY
BH100 SERIES
MFG BY COMER
(9.211.853.00.BC)
MODEL BH116

REF. NO.	PART NO.	DESCRIPTION	QTY. REQ'D.	NOTES
	50081062	**Gearbox Assembly**	**1**	
1	-----	Shim (55.3 x 61.7 x 0.3)	1	
2	50078596	Bevel Gear Set Z15-Z22 M5	1	
	-----	Bevel Gear Forged M5 Z22	1	
	-----	Bevel Gear Forged M5 Z15	1	
3	50078585	Shaft	1	
4	-----	Bush Hog Name Plate	1	
5	50078586	Cover	1	
6	50078587	Casing	1	
7	50078588	Cover	1	
8	50078594	O-Ring OR-176 D72.62 x 3.53	1	
9	50078590	Spacer 69.9 x 79.8 x 49.5	1	
10	70337	Shim (40.3 x 51.5 x 0.3)	2	
11	50078591	Shim (40.3 x 51.5 x 2.0)	2	
12	70639	Shim (60.3 x 71.7 x 0.3)	1	
13	70382	Ball Bearing 6305	1	
14	70229	Ball Bearing 6207	1	
15	70256	Ball Bearing 6208	2	
16	70618	Bolt HH M10 x 20 UNI 5739 8.8	4	
17	70694	Castle Nut M24 x 2PR80B	1	
18	70695	Bolt Washer 25 x 44 x 4	1	
19	70226	Parallel Key B 10 x 8 x 30	1	
20	70250	Snap Ring Shaft D40 DIN 471	1	
21	70133	Snap Ring Hole 72 UNI 7437	1	
22	50044136	Snap Ring 62 UNI 7438	1	
23	70877	Snap Ring 80 DIN 472	1	
24	50078592	Snap Ring SB 80	1	
25	70181	Plug 3/8" Gas	2	
26	50046988	Cap 62 x 7	1	
27	50078593	Oil Seal Dust Lip 40 x 62 x 7 NBR	1	
28	70134	Dust Lip Bauslx2 35 x 72 x 10/7 NBR	1	
29	-----	Shim (55.3 x 61.7 x 0.4)	1	
30	-----	Shim (55.3 x 61.7 x 0.5)	1	
31	-----	Shim (55.3 x 61.7 x 1.0)	1	
32	70338	Shim (40.3 x 51.5 x 0.4)	2	
33	70339	Shim (40.3 x 51.5 x 0.5)	2	
34	70340	Shim (40.3 x 51.5 x 1.0)	2	
35	70640	Shim (60.3 x 71.7 x 0.4)	1	
36	70641	Shim (60.3 x 71.7 x 0.5)	1	
37	70642	Shim (60.3 x 71.7 x 1.0)	1	
38	70699	Cotter Pin B5 x 50 UNI 1336	1	
39	81445	External Retain Ring	1	
40	81572	Vent Plug Assembly	1	

© 2019 Alamo Group Inc.

GEARBOX ASSEMBLY
BH100 SERIES
MFG BY COMER
(9.211.853.10.BC)
MODEL BH116

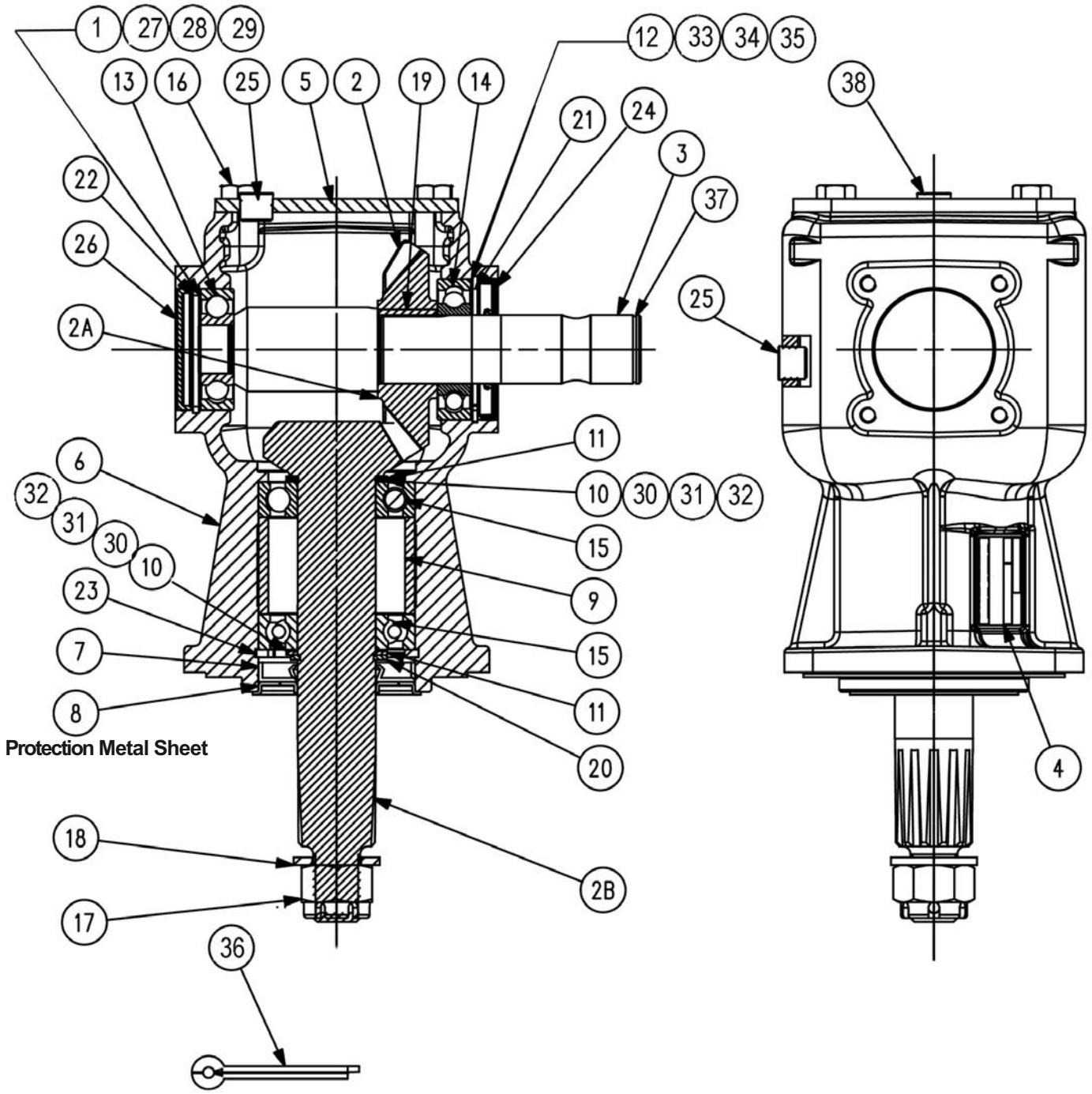

© 2019 Alamo Group Inc.

GEARBOX ASSEMBLY
BH100 SERIES
MFG BY COMER
(9.211.853.10.BC)
MODEL BH116

REF. NO.	PART NO.	DESCRIPTION	QTY. REQ'D.	NOTES
	50081062	**Gearbox Assembly**	**1**	
1	-----	Shim (55.3 x 61.7 x 0.3)	1	
2	50078596	Bevel Gear Set Z15-Z22 M5	1	
2A	-----	Bevel Gear Forged M5 Z22	1	
2B	-----	Bevel Gear Forged M5 Z15	1	
3	50078585	Shaft	1	
4	-----	Bush Hog Name Plate	1	
5	50078586	Cover	1	
6	-----	Casing	1	
7	50080256	Double Lip Seal, 40 x 80 x 10	1	
8	50080257	Protection Metal Sheet	1	
9	50078590	Spacer 69.9 x 79.8 x 49.5	1	
10	70337	Shim (40.3 x 51.5 x 0.3)	2	
11	50078591	Shim (40.3 x 51.5 x 2.0)	2	
12	70639	Shim (60.3 x 71.7 x 0.3)	1	
13	70382	Ball Bearing 6305	1	
14	70229	Ball Bearing 6207	1	
15	70256	Ball Bearing 6208	2	
16	70618	Bolt HH M10 x 20 UNI 5739 8.8	4	
17	70694	Castle Nut M24 x 2PR80B	1	
18	70695	Bolt Washer 25 x 44 x 4	1	
19	70226	Parallel Key B 10 x 8 x 30	1	
20	70250	Snap Ring Shaft D40 DIN 471	1	
21	70133	Snap Ring Hole 72 UNI 7437	1	
22	50044136	Snap Ring 62 UNI 7438	1	
23	70877	Snap Ring 80 DIN 472	1	
24	70134	Dust Lip Bauslx2 35 x 72 x 10/7 NBR	1	
25	70181	Plug 3/8" Gas	2	
26	50046988	Cap 62 x 7	1	
27	-----	Shim (55.3 x 61.7 x 0.4)	1	
28	-----	Shim (55.3 x 61.7 x 0.5)	1	
29	-----	Shim (55.3 x 61.7 x 1.0)	1	
30	70338	Shim (40.3 x 51.5 x 0.4)	2	
31	70339	Shim (40.3 x 51.5 x 0.5)	2	
32	70340	Shim (40.3 x 51.5 x 1.0)	2	
33	70640	Shim (60.3 x 71.7 x 0.4)	1	
34	70641	Shim (60.3 x 71.7 x 0.5)	1	
35	70642	Shim (60.3 x 71.7 x 1.0)	1	
36	70699	Cotter Pin B5 x 50 UNI 1336	1	
37	81445	External Retain Ring	1	
38	81572	Vent Plug Assembly	1	

© 2019 Alamo Group Inc.

GEARBOX ASSEMBLY
MFG BY B&P
BH100 SERIES
MODEL BH116

NOTE: Use this page if your Gearbox has Bolt-on Bearing Covers.

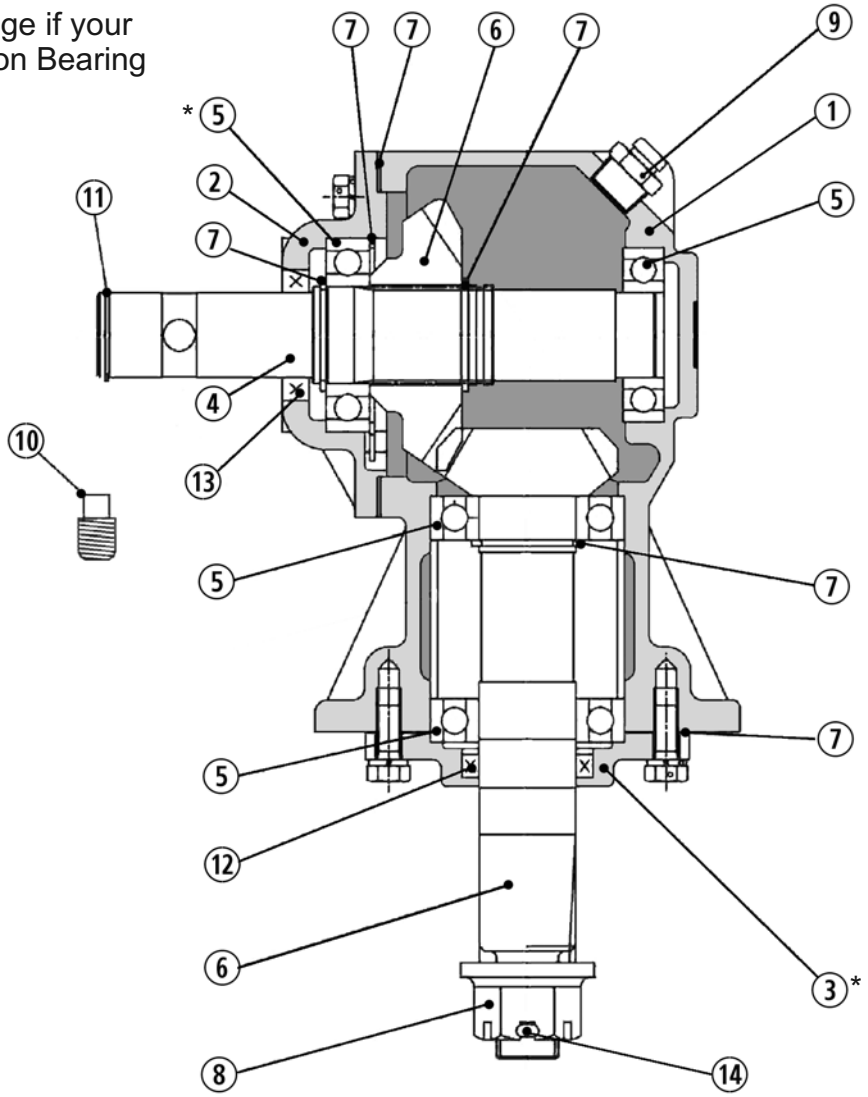

REF. NO.	PART NO.	DESCRIPTION	QTY. REQ'D.	NOTES
	00786192	Gearbox Assembly	1	see note
1	N/A	Housing	1	
2	0656220003	Cover, Input	1	
3	00757683	Cover, Output	1	
4	81634	Shaft, Input	1	
5	00786196	Kit, Roller Bearing	1	
6	00786197	Kit,Bevel Gear	1	
7	00786198	Kit, Shim	1	
8	00758692	Nut, Slotted Flange	1	
9	88851	Plug, Vent 1/2”	1	
10	00565000	Plug, Solid 1/8”	1	
11	7192	Snap Ring, Driveshaft Retainer	1	
12	00786214	Seal, Bottom 40 x 54 x 9.5	1	
13	00786213	Seal, Top 34.9 x 54 x 11	1	
14	81648	Cotter Pin	1	

© 2019 Alamo Group Inc.

SLIP CLUTCH DRIVESHAFT ASSEMBLY
MFD. BY BONDIOLI AND PAVESI
BH100 SERIES
MODELS BH114, BH115, BH116

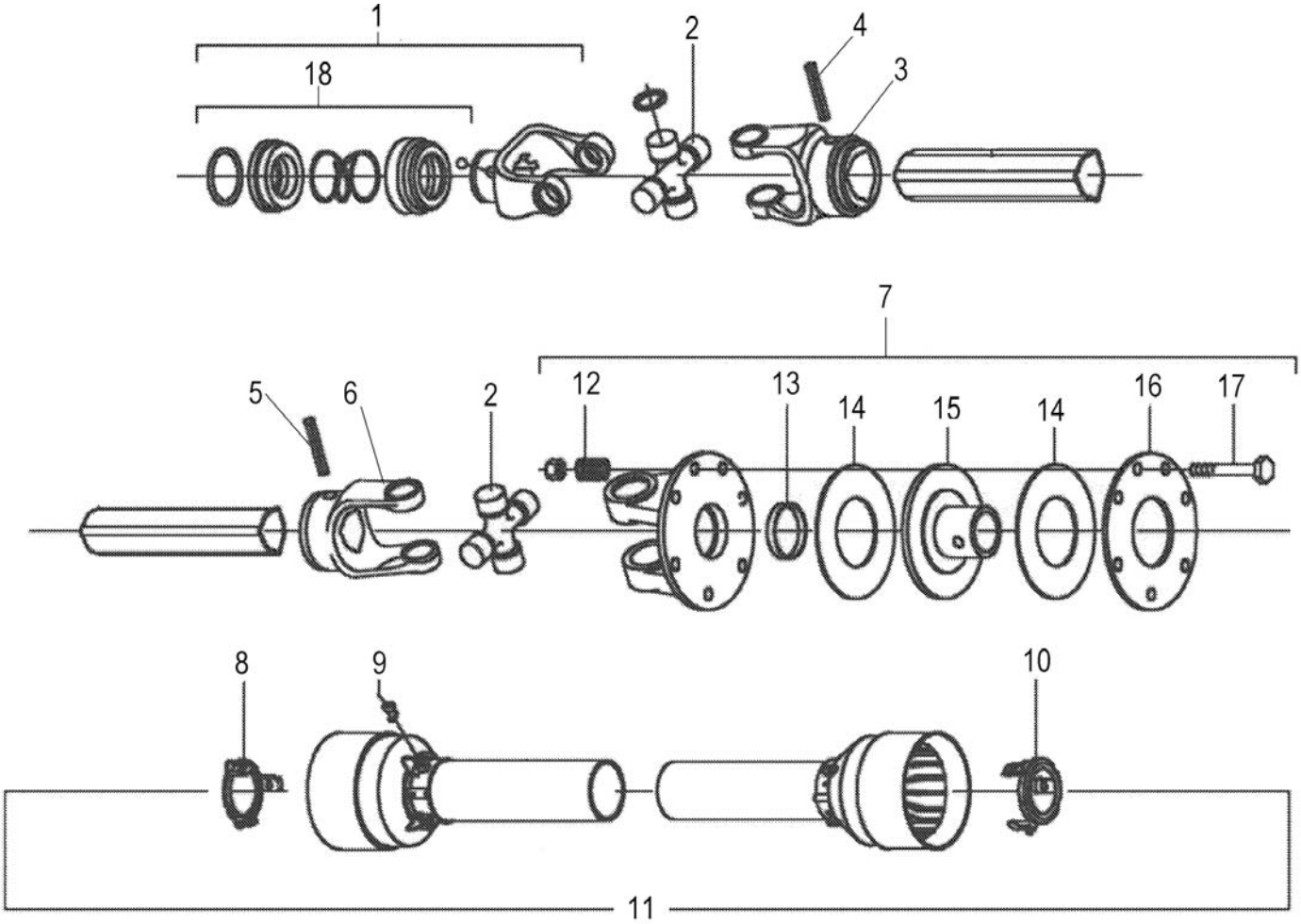

Ref. No.	Part No.	Description	Qty. Req'd.	Notes
	00759318CBH	**Driveshaft Assembly Complete**	**1**	BH114 & BH115
	50076549	**Driveshaft Assembly Complete**	**1**	BH116
1	76711	Complete Collar Yoke	1	
2	64694	Cross & Bearing Kit	2	
3	50064182	Outer Yoke	1	
4	78577	Roll Pin For Outer Yoke	1	
5	78578	Roll Pin For Inner Yoke	1	
6	50064184	Inner Yoke	1	
7	00773087	Clutch Assy - 1-3/8 Bore	1	
8	50053143	Guard Retaining Collar For Out	1	
9	50056404	Bolt	6	
10	50053144	Guard Retaining Collar For Inn	1	
11	00768342	Shield Assy, Complete	1	BH114 & BH115(For 00759318CBH)
	00785576	Shield Assy, Complete	1	BH116 (For 50076549)
12	76080	Spring	8	
13	76195	Bush	1	
14	76194	Clutch Pad	2	
15	00789234	Hub,Special Clutch -1-3/8 Bore	1	
16	76196	Pressure Plate	1	
17	00754316	Bolt W/Elastic Tln - M10 X 80	8	
18	50017480	Ball Collar Kit 1 3/8	1	

© 2019 Alamo Group Inc.

SHEAR BOLT DRIVESHAFT ASSEMBLY
BH SERIES
MODELS BH114, BH115, BH116

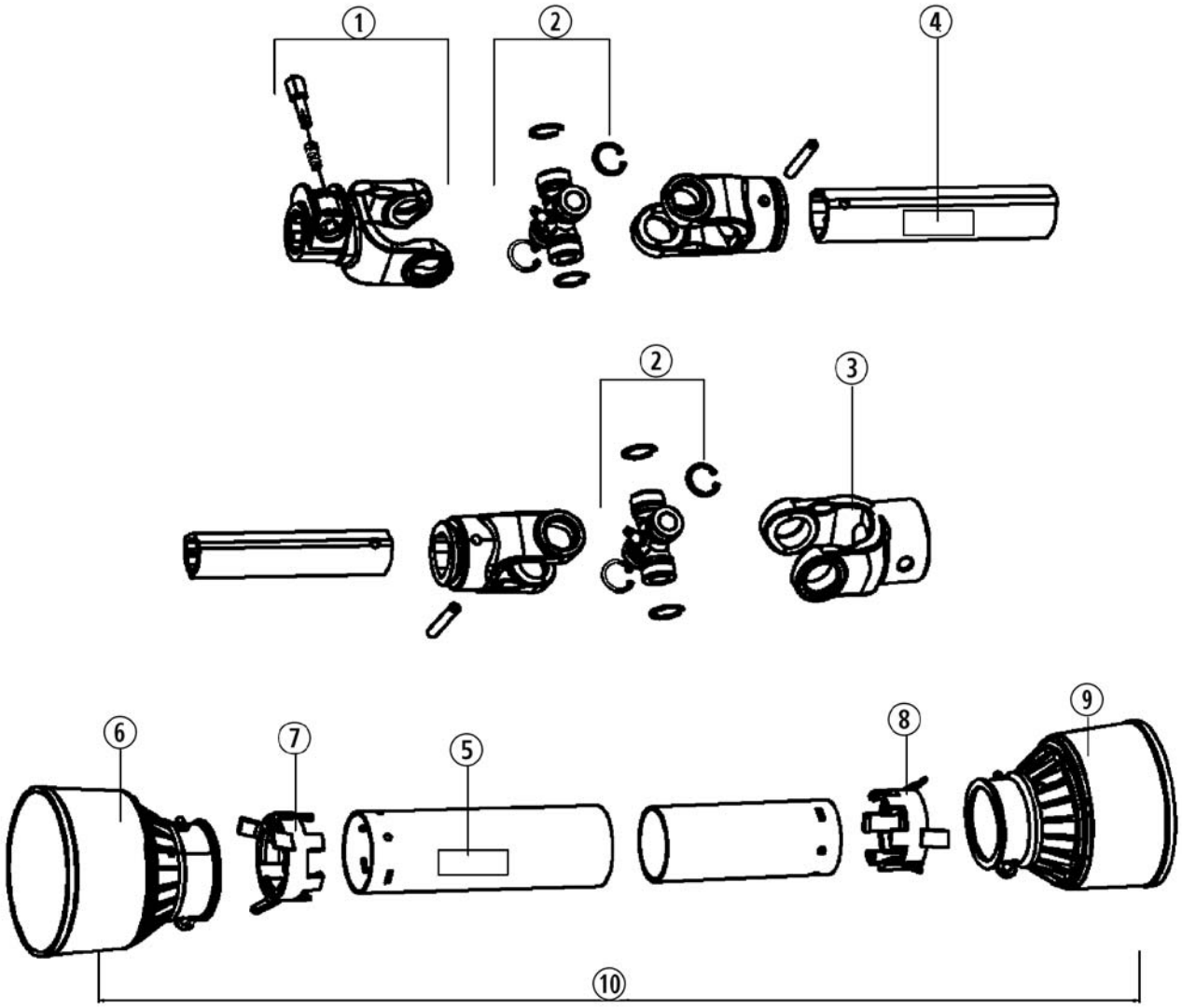

REF. NO.	PART NO.	DESCRIPTION	QTY. REQ'D.	NOTES
	50074691	**Driveline Assy.**	**1**	Used On BH115, BH116 Models
	50074692	**Driveline Assy.**	**1**	Used On BH114 Models
1	50075056	Push Pin Yoke Assy	1	
2	50074282	Cross Bearing Kit	2	
3	50075057	Yoke, Plain Bore	1	Shear Bolt Protection
	50074654	Shear Bolt Package	1	Contains 5 Bolts and 5 Locknuts
4	78786	Safety Decal, Inner	1	
5	78608	Safety Decal, Outer	1	
6	--------	Outer Shield Cone	1	
7	--------	Outer Shield Bearing	1	
8	--------	Inner Shield Bearing	1	
9	--------	Inner Shield Cone	1	
10	50075058	Complete Shield Kit	1	Used On BH115, BH116 Models
	50075059	Complete Shield Kit	1	Used On BH114 Models

© 2019 Alamo Group Inc.

QUICK HITCH KIT - 50081027
BH100 SERIES
MODELS BH114, BH115, BH116

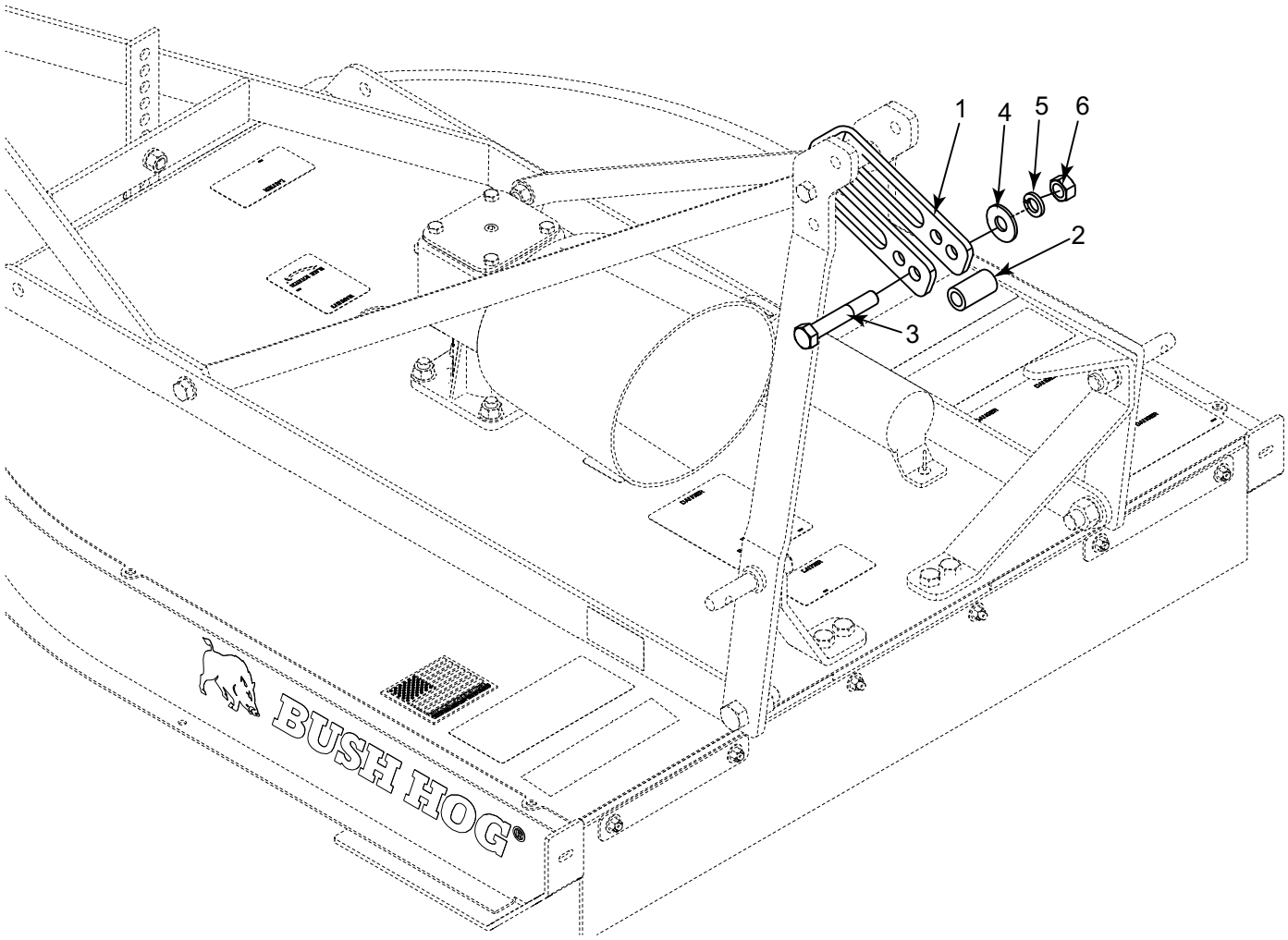

REF. NO.	PART NO.	DESCRIPTION	QTY. REQ'D.	NOTES
1	50081413	QH Toggle	1	
2	50081414	Bushing (1.25 x .781 x 2.25L)	1	
3	20264	Capscrew, 3/4" x 4-1/2" G5 ZP	1	
4	15920	Flatwasher, 3/4" ZP	1	
5	146	Lockwasher, 3/4" ZP	1	
6	19517	Hex Nut, 3/4" CP	1	

© 2019 Alamo Group Inc.

BUSH HOG®

2501 GRIFFIN AVE. • SELMA, AL 36703
WWW.BUSHHOG.COM