BH300-2 SERIES ROTARY CUTTER

BUSH HOG®

MODELS
BH315-2, BH316-2, BH317-2

Revised 01/22

PARTS MANUAL
SECTION 122A

An Operator's Manual was shipped with the equipment. The Operator's Manual is an integral part of the safe operation of this machine and must be maintained with the unit at all times. **READ, UNDERSTAND, and FOLLOW** the Safety and Operation Instructions contained in this manual before operating the equipment. If the Operator's Manual is not with the equipment, contact your dealer or Bush Hog to obtain a copy before operating the equipment.

Safety Video

Important Operating and Safety Instructions are found in the Mower Safety Video that can be instantly accessed on the internet at: www.algqr.com/bve

www.algqr.com/bve

BUSH HOG®
2501 Griffin Ave.
Selma, AL 36703
Parts Ordering 1-800-304-2836
www.bushhog.com

ATTENCIÓN! LEA EL INSTRUCTIVO

Si No Lee Ingles, Pida Ayuda a Alguien Que Si Lo Lea Para Que le Traduzca las Medidas de Sequridad.

MEMBER OF THE ALAMO GROUP
ALWAYS ON THE CUTTING EDGE®

©2020 Alamo Group Inc.

PARTS ORDERING GUIDE

The following instructions are offered to help eliminate needless delay and error in processing purchase orders for the equipment in this section.

1. The Parts Section is prepared in logical sequence and grouping of parts that belong to the basic machine featured in this manual. Part Numbers and Descriptions are given to help locate the parts and quantities required.

2. The Purchase Order must include the name and address of the person or organization ordering the parts, who should be charged, and if possible, the serial number of the machine for which the parts are ordered.

3. The Purchase Order must clearly list the quantity of each part, the complete and correct part number (be sure to include all periods), and the basic name of the part.

4. The Manufacturer reserves the right to substitute parts where applicable.

5. Some parts are unlisted items which are special production items not normally stocked and are subject to special handling. Request a quotation for such parts before sending a Purchase Order.

6. The Manufacturer reserves the right to change prices without prior notice.

For maximum safety and to guarantee optimum product reliability, always use genuine BUSH HOG Parts. The use of inferior replacement parts may causepremature or catastrophic failure which could result in serious injury or death.Direct any questions regarding parts to:

BUSH HOG
2501 Griffin Ave.
Selma, AL 36703
www.bushhog.com
Contact Us
800-304-2836

BUSH HOG®

To the Owner/Operator/Dealer

All implements with moving parts are potentially hazardous. There is no substitute for a cautious, safe-minded operator who recognizes the potential hazards and follows reasonable safety practices. The manufacturer has designed this implement to be used with all its safety equipment properly attached to minimize the chance of accidents.

BEFORE YOU START! Read the safety messages on the implement and shown in your manual. Observe the rules of safety and common sense!

WARRANTY INFORMATION:
Read and understand the complete Warranty Statement found in this Manual. Fill out the Warranty RegistrationForm in full and return it to within 30 Days. Make certain the Serial Number of the Machine is recorded on theWarranty Card and on the Warranty Form that you retain.

TABLE OF CONTENTS
BH300-2 SERIES ROTARY CUTTERS
BH315-2, BH316-2, BH317-2

DESCRIPTION .....PAGE NUMBER

Front Belting and Rear Band, (ALL MODELS).....122A-1-1
Front Chains and Rear Chains, Single Row (ALL MODELS)...122A-1-2, 122A-1-3
Front Chains and Rear Chains, Double Row (ALL MODELS) .122A-1-4, 122A-1-5
BH315 Base Frame Assembly 122A-1-6, 122A-1-7
BH316 Base Frame Assembly 122A-1-8, 122A-1-9
BH317 Base Frame Assembly 122A-1-10

Gearbox Assembly BH315-2.....122A-2-1
Gearbox Assembly BH316-2.....122A-2-2
Gearbox Assembly BH317-2.....122A-2-3

Driveline Assembly BH315-2 .....122A-3-1
Driveline Assembly BH316-2 .....122A-3-2
Driveline Assembly BH317-2 .....122A-3-3

Hitch Assembly, (ALL MODELS) 122A-4-1

Single Tailwheel and Related Parts, (ALL MODELS) 122A-5-1
Dual Tailwheel and Related Parts BH317-2.....122A-5-2

WARRANTY

LIMITED WARRANTY

Bush Hog warrants to the original purchaser of any new Bush Hog equipment, purchased from an authorized Bush Hog dealer, that the equipment be free from defects in material and workmanship for a period of one (1) year for non-commercial, state and municipalities' use and ninety (90) days for commercial use from date of retail sale. The obligation of Bush Hog to the purchaser under this warranty is limited to the repair or replacement of defective parts.

Replacement or repair parts installed in the equipment covered by this limited warranty are warranted for ninety (90) days from the date of purchase of such part or to the expiration of the applicable new equipment warranty period, whichever occurs later. Warranted parts shall be provided at no cost to the user at an authorized Bush Hog dealer during regular working hours. Bush Hog reserves the right to inspect any equipment or parts which are claimed to have been defective in material or workmanship.

In addition to the standard Limited Warranty shown above, Bush Hog also provides:

A TEN-YEAR (120 months) GEARBOX LIMITED WARRANTY* (6 Years Full Coverage; Parts Only for Years 7 through 10) provided they have been properly maintained† and have not been subjected to abuse or mis-use except as limited below.

***WARRANTY LIMITATIONS - GEARBOX**

A. Gearbox warranty extends to the original purchaser of a Bush Hog Rotary Cutter Only.
B. Warranty claimant must provide proper product registration and original receipt for purchase.
C. Bush Hog reserves the right to warrant Gearboxes and components at our discretion based on photographic or video evidence of product failure.
D. If Bush Hog deems a Gearbox failed due to defects in materials or workmanship, users' Gearboxes may be rebuilt by Bush Hog or replaced by new or rebuilt Gearboxes at the option of Bush Hog.

A ONE-YEAR (12 months) LIMITED WARRANTY** on the DRIVELINE components provided they have been properly maintained† and have not been subjected to abuse or mis-use.

* *WARRANTY LIMITATIONS - DRIVELINE

A. A ONE-YEAR (12 months) DRIVELINE LIMITED WARRANTY applies to SHIELDS except where evidence of wear from contact with other parts on the shield voids this warranty.
B. Shield Bearings are wearing parts and are not warrantable.
C. Slip-Clutch Plates are wearing parts and are not warrantable. Evidence of "burning up" Slip-Clutch Plates due to improper adjustment will void warranty on Slip-Clutch Parts.

† NOTE - "*properly maintained*" specifically includes, but is not limited to:

A) Running Gearboxes with the proper amount of the correct lubricant.
B) Adjusting Slip-Clutches correctly to provide proper protection for Driveline and Gearbox components.
C) Proper lubrication of all DRIVELINE components as specified.
D) Maintaining proper bearing preload on all Gearbox shafts.

WARRANTY

DISCLAIMER OF IMPLIED WARRANTIES & CONSEQUENTIAL DAMAGES

Bush Hog's obligation under this limited warranty, to the extent allowed by law, is in lieu of all warranties, implied or expressed, INCLUDING IMPLIED WARRANTIES OF MERCHANTABILITY AND FITNESS FOR A PARTICULAR PURPOSE and any liability for incidental and consequential damages with respect to the sale or use of the items warranted. Such incidental and consequential damages shall include but not be limited to: transportation charges other than normal freight charges; cost of installation other than cost approved by Bush Hog; duty; taxes; charges for normal service or adjustment; loss of crops or any other loss of income; rental of substitute equipment, expenses due to loss, damage, detention or delay in the delivery of equipment or parts resulting from acts beyond the control of Bush Hog.

THIS LIMITED WARRANTY SHALL NOT APPLY:

1. To vendor items which carry their own warranties.
2. If the unit has been subjected to misapplication, abuse, misuse, negligence, fire or other accident.
3. If parts not made or supplied by Bush Hog have been used in connection with the unit, if, in the sole judgment of Bush Hog such use affects its performance, stability or reliability.
4. If the unit has been altered or repaired outside of an authorized Bush Hog dealership in a manner which, in the sole judgment of Bush Hog, affects its performance, stability or reliability.
5. To normal maintenance service and normal replacement items such as gearbox lubricant, hydraulic fluid, worn blades, or to normal deterioration of such things as belts and exterior finish due to use or exposure.
6. To expendable or wear items such as teeth, chains, sprockets, belts, springs and any other items that in the company's sole judgment is a wear item.

IN ORDER FOR WARRANTIES TO BE PROCESSED, PRODUCT WARRANTY REGISTRATION MUST BE FILED WITH BUSH HOG THROUGH THE SELLING DEALER.

Retain original purchase receipt and record the model number, serial number and date of purchase. This information will be helpful to your dealer if parts or services are required.

MODEL NUMBER _____
SERIAL NUMBER _____
DATE OF PURCHASE _____

NO EMPLOYEE OR REPRESENTATIVE OF BUSH HOG IS AUTHORIZED TO CHANGE THIS LIMITED WARRANTY IN ANY WAY OR GRANT ANY OTHER WARRANTY UNLESS SUCH CHANGE IS MADE IN WRITING AND SIGNED BY BUSH HOG'S SERVICE MANAGER, 2501 GRIFFIN AVE., SELMA, AL. 36703

FRONT BELTING and REAR BAND
All Models BH315-2, BH316-2, BH317-2

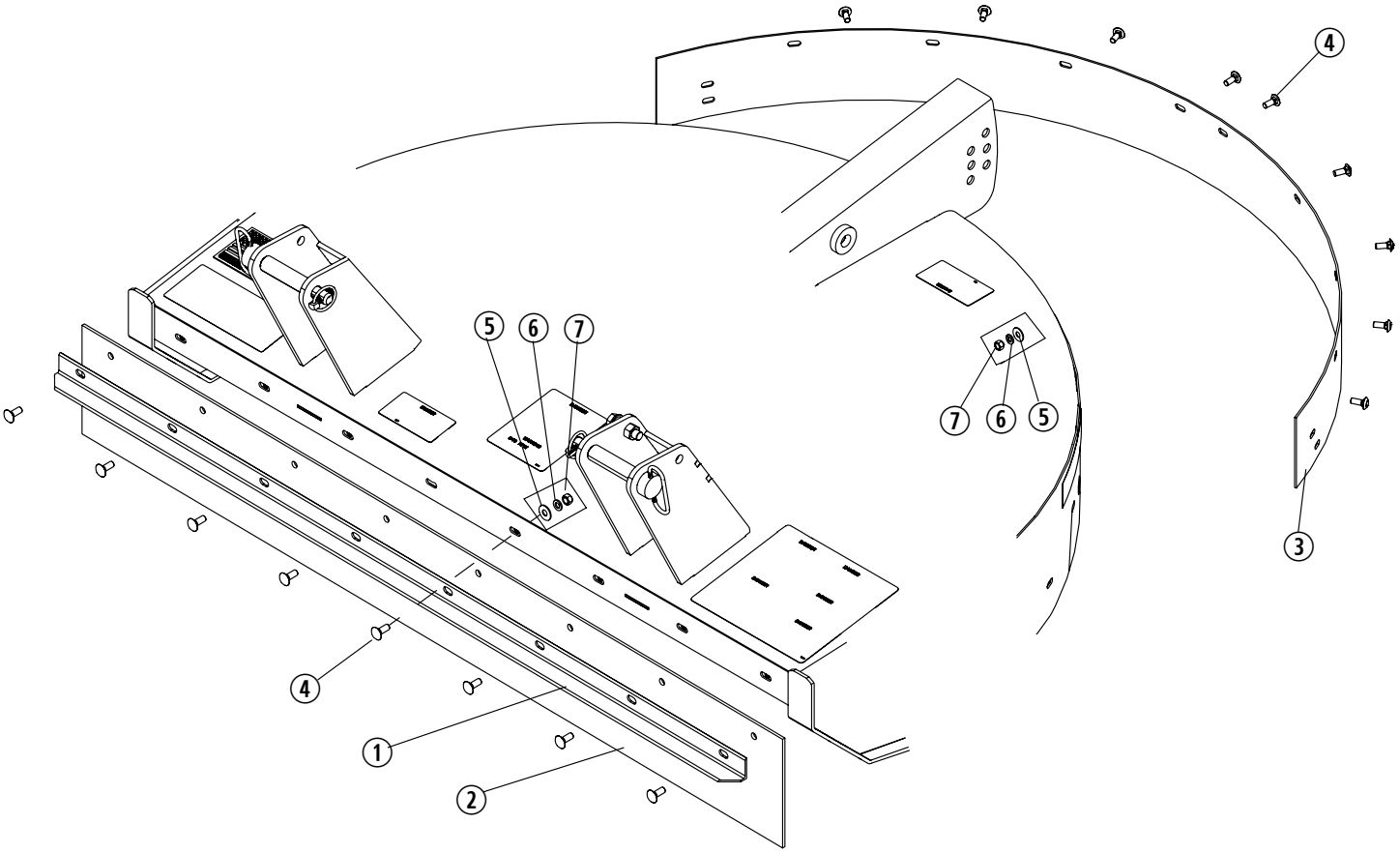

REF. NO.	PART NO.	DESCRIPTION	QTY. REQ'D.
1	50071065	Angle for BH315-2 - 5' Models	1
	50070871	Angle for BH316-2 - 6' Models	1
	50070974	Angle for BH317-2 - 7' Models	1
2	50080398	Belting BH315-2 - 5' Models	1
	50080399	Belting BH316-2 - 6' Models	1
	50070973	Belting BH317-2 - 7' Models	1
3	50081904	Rear Band BH315-2	1
	50081906	Rear Band BH316-2	1
	50081908	Rear Band BH317-2	1
4	44109BH	Carriage Bolt 3/8" x 1" G5 ZP	*
5	15915BH	Flatwasher, 3/8" ZP	*
6	15812	Lockwasher, 3/8"	*
7	8151200	Hex Nut, 3/8" CP	*

* As Required

©2020 Alamo Group Inc.

FRONT CHAINS and REAR CHAINS
SINGLE ROW
All Models BH315-2, BH316-2, BH317-2

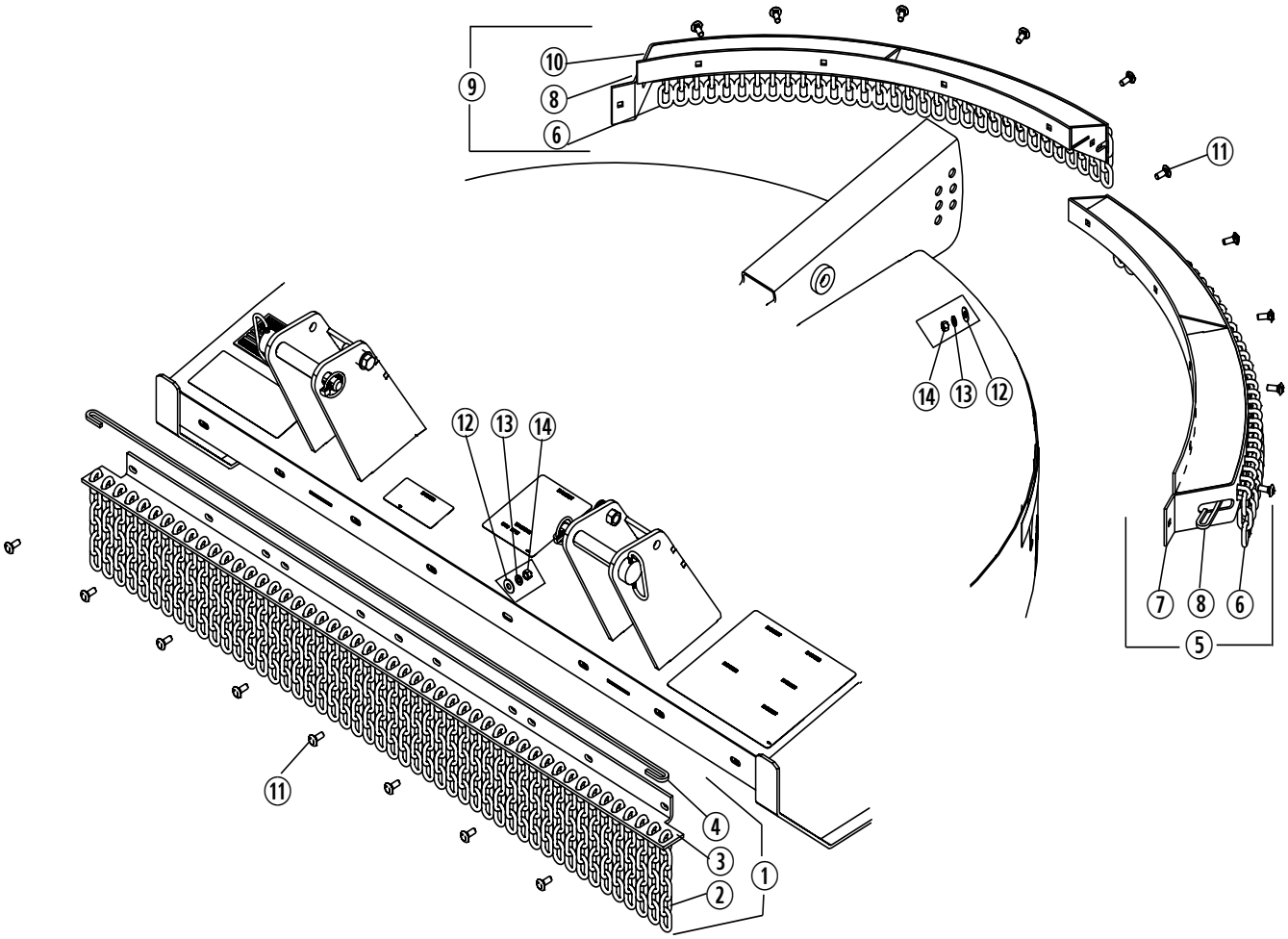

©2020 Alamo Group Inc.

FRONT CHAINS and REAR CHAINS
SINGLE ROW
All Models BH315-2, BH316-2, BH317-2

REF. NO.	PART NO.	DESCRIPTION	QTY. REQ'D.
1	50074799SP	Front Chain Assy. BH315-2	1
	50074796SP	Front Chain Assy. BH316-2	1
	50073880SP	Front Chain Assy. BH317-2	1
2	50017211	Chain, 6 Link	*
3	———	Chain Bracket, Front	1
4	50070149	Retainer Rod, Front BH315-2	1
	50070049	Retainer Rod, Front BH316-2	1
	50070112	Retainer Rod, Front BH317-2	1
5	50070145	Rear Chain Assy. LH, BH315-2	1
	50070045	Rear Chain Assy. LH, BH316-2	1
	50070107	Rear Chain Assy. LH, BH317-2	1
6	50018912	Chain, 4 Link	*
7	———	Rear Chain Bracket, LH	1
8	50073402	Retainer Rod, Rear, BH315-2	2
	50073357	Retainer Rod, Rear, BH316-2	2
	50074289	Retainer Rod, Rear, BH317-2	2
9	50070146	Rear Chain Assy. RH, BH315-2	1
	50070046	Rear Chain Assy. RH, BH316-2	1
	50070109	Rear Chain Assy. RH, BH317-2	1
10	———	Rear Chain Bracket, RH	1
11	44109BH	Carriage Bolt, 3/8"x 1" Gr.5	*
12	15915BH	Flatwasher, 3/8"	*
13	15812	Lockwasher, 3/8"	*
14	8151200	Hex Nut, 3/8"	*

*As Required

©2020 Alamo Group Inc.

FRONT CHAINS and REAR CHAINS
DOUBLE ROW
All Models BH315-2, BH316-2, BH317-2

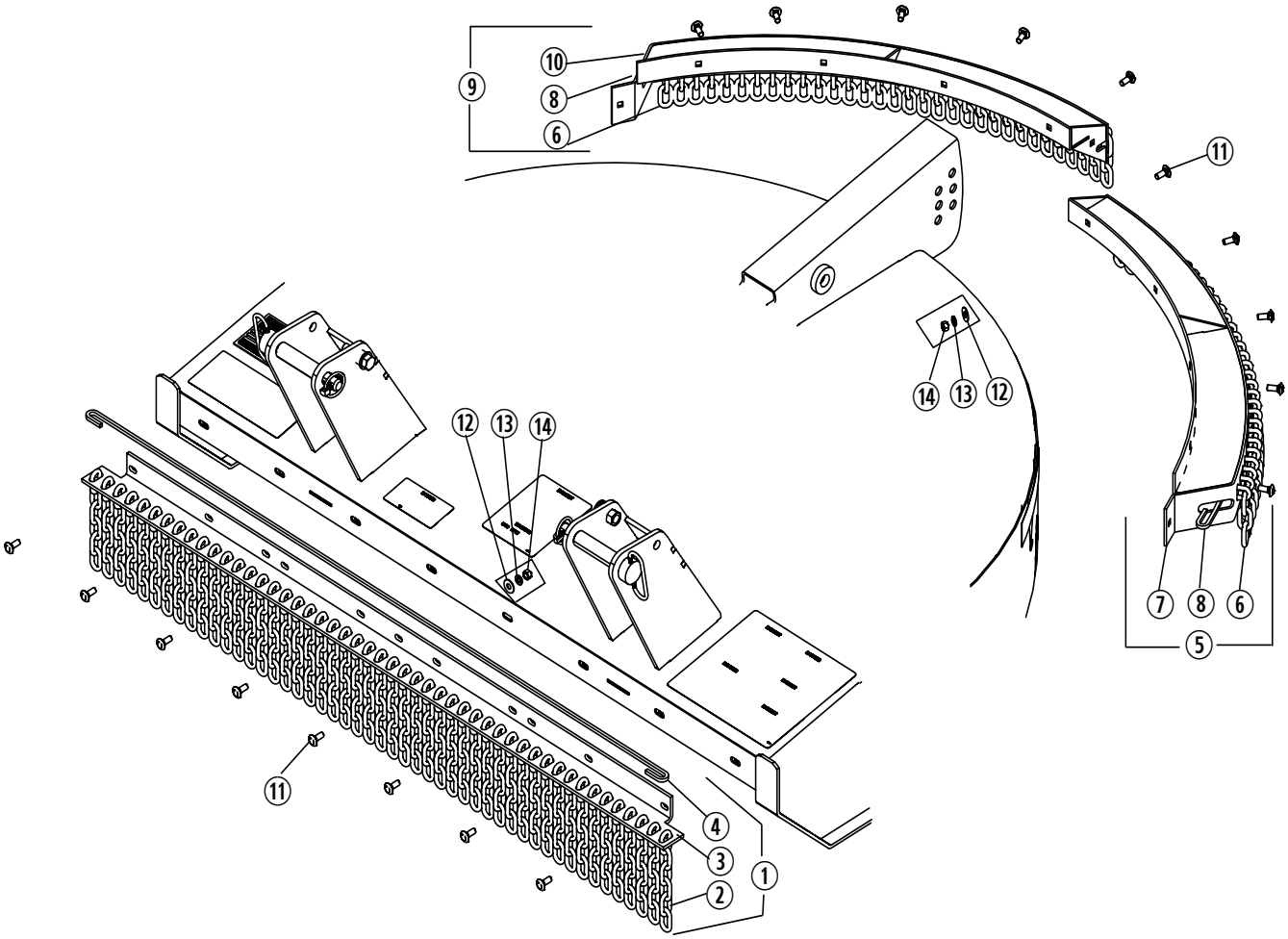

©2020 Alamo Group Inc.

FRONT CHAINS and REAR CHAINS
DOUBLE ROW
All Models BH315-2, BH316-2, BH317-2

REF. NO.	PART NO.	DESCRIPTION	QTY. REQ'D.
1	50070302	Front Chain Assy. BH315-2	1
	50070320	Front Chain Assy. BH316-2	1
	50070344	Front Chain Assy. BH317-2	1
2	50017213	Chain, 11 Link	*
3	———	Chain Bracket, Front	1
4	50070149	Retainer Rod, Front BH315-2	1
	50070049	Retainer Rod, Front BH316-2	1
	50070112	Retainer Rod, Front BH317-2	1
5	50070303	Rear Chain Assy. LH, BH315-2	1
	50070321	Rear Chain Assy. LH, BH316-2	1
	50070345	Rear Chain Assy. LH, BH317-2	1
6	50017212	Chain, 4 Link, Plated	*
7	———	Rear Chain Bracket, LH	1
8	50070142	Retainer Rod, Rear, BH315-2	2
	50070036	Retainer Rod, Rear, BH316-2	2
	50074289	Retainer Rod, Rear, BH317-2	2
9	50070304	Rear Chain Assy. RH, BH315-2	1
	50070322	Rear Chain Assy. RH, BH316-2	1
	50070346	Rear Chain Assy. RH, BH317-2	1
10	———	Rear Chain Bracket, RH	1
11	44109BH	Carriage Bolt, 3/8"x 1" Gr.5	*
12	15915BH	Flatwasher, 3/8"	*
13	15812	Lockwasher, 3/8"	*
14	8151200	Hex Nut, 3/8"	*

*As Required

©2020 Alamo Group Inc.

BASE FRAME ASSEMBLY
MODEL BH315-2 ROTARY CUTTER

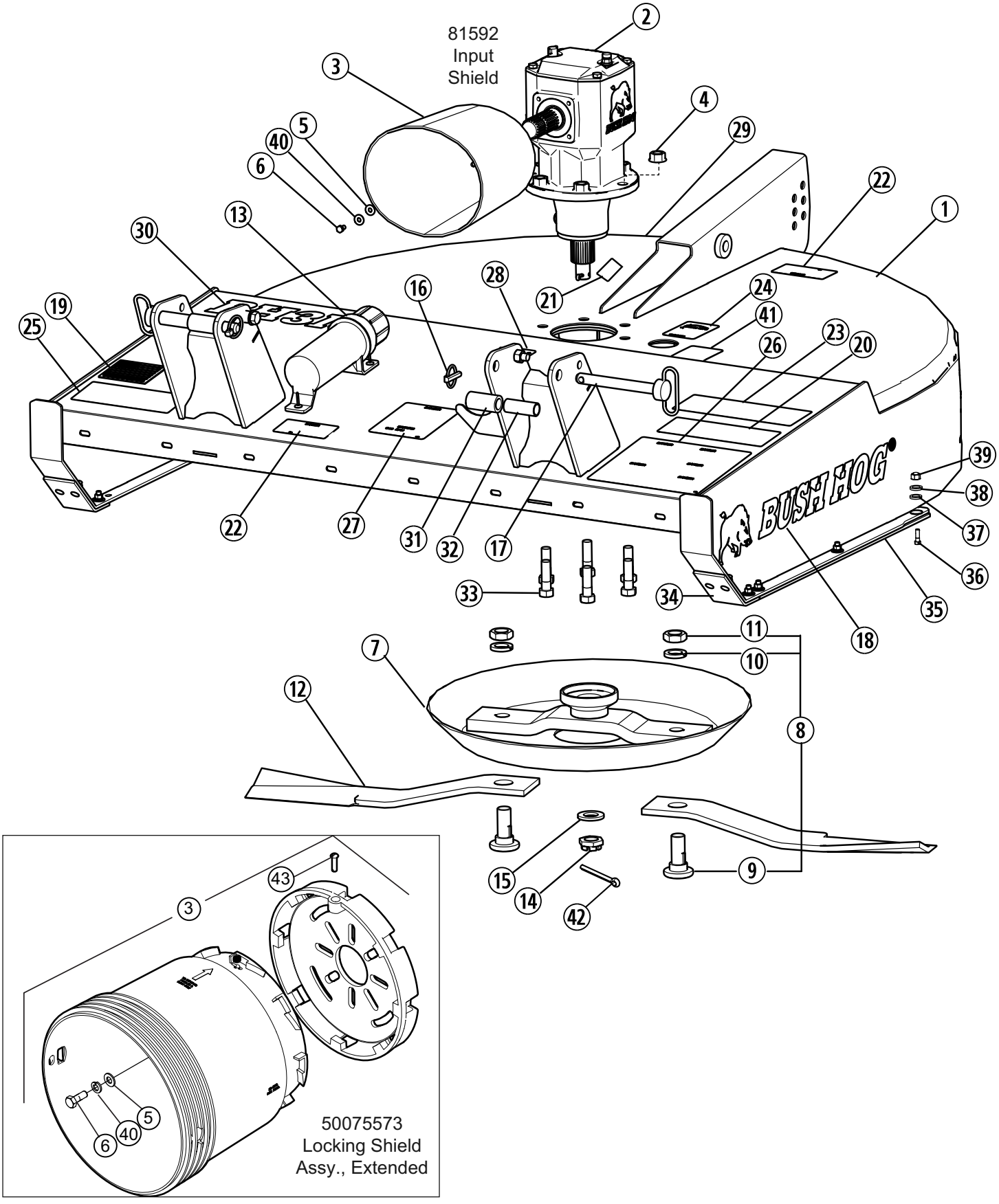

©2020 Alamo Group Inc.

BASE FRAME ASSEMBLY
MODEL BH315-2 ROTARY CUTTER

REF. NO.	PART NO.	DESCRIPTION	QTY. REQ'D.
1	——-	Deck Weldment, BH Red (50081797-10)	1
	——-	Deck Weldment, JD Green (50081797-16)	1
	——-	Deck Weldment, Kub Orange (50081797-23)	1
	——-	Deck Weldment, NH Blue (50081797-28)	1
2	00791060BH	Gearbox Assembly	1
3	81592	Input Shield	1
	50075573	Locking Shield Assy., Extended	1
4	20299	Locknut, 3/4" ZP	6
5	44216	Flatwasher, M8 ZP	4
6	90560	HHCS, M8 x 1.25 x 15 G8.8 w/Patch	4
7	50072529	Pan Weldment	1
8	63607	Blade Bolt Kit	2
9	7919BH	Blade Bolt	2
10	20322	Lockwasher, 1-1/8" CP	2
11	252BH	Jamnut" 1-1/8" NF	2
12	7555BH	Blade, 5' Uplift	2
13	50035829	Owners Manual Tube	1
14	00791093	Castle Nut, M30 - 2	1
15	00791085	Shield, Protective	1
16	2850005	Klik Pin, 7/16" x 1-3/4"	2
17	50080166	Hitch Pin, 7/8" x 7"	2
18	50080370	Decal, BH - Reflect	2
19	50074259	Decal, Made in USA	1
	50070832	Decal Kit (items 20-29)	1
20	D813	Decal, Danger Multilingual	1
21	D454	Decal, Warning Crush Hazard	1
22	D614	Decal, Danger Thrown Objects	2
23	D590	Decal, Lube	1
24	D551	Decal, Blade Rotation CCW	1
25	D559	Decal, Genuine BH Parts	1
26	D549	Decal, Danger, Operation	1
27	D547	Decal, Danger	1
28	D546	Decal, Danger Guard Missing	1
29	50031214	Red Reflector	2
30	50080249	Decal, Model, BH315	1
31	91061	Spacer	2
32	91062	Spacer, Cat 2 Std	2
33	1162424	HHCS, 3/4" x 2-1/2" G5 ZP	6
34	50040387	Removable Front Skid	2
35	50081172	Removable Skid	2
36	3161212	#3 HD Plow BLT 3/8" x 1-1/4" G5	12
37	15915BH	Flatwasher 3/8" ZP	12
38	15812	Lockwasher 3/8" ZP	12
39	8151200	Hex Nut 3/8" CP	12
40	44311BH	Lockwasher, M8 ZP	4
41	50081789	Decal, 10 Year Gearbox Warranty	1
42	2716423	Pin, Cotter M6 x 60	1
43	50075575	Turn Fastener, 1/4"	1

©2020 Alamo Group Inc.

BASE FRAME ASSEMBLY
MODEL BH316-2 ROTARY CUTTER

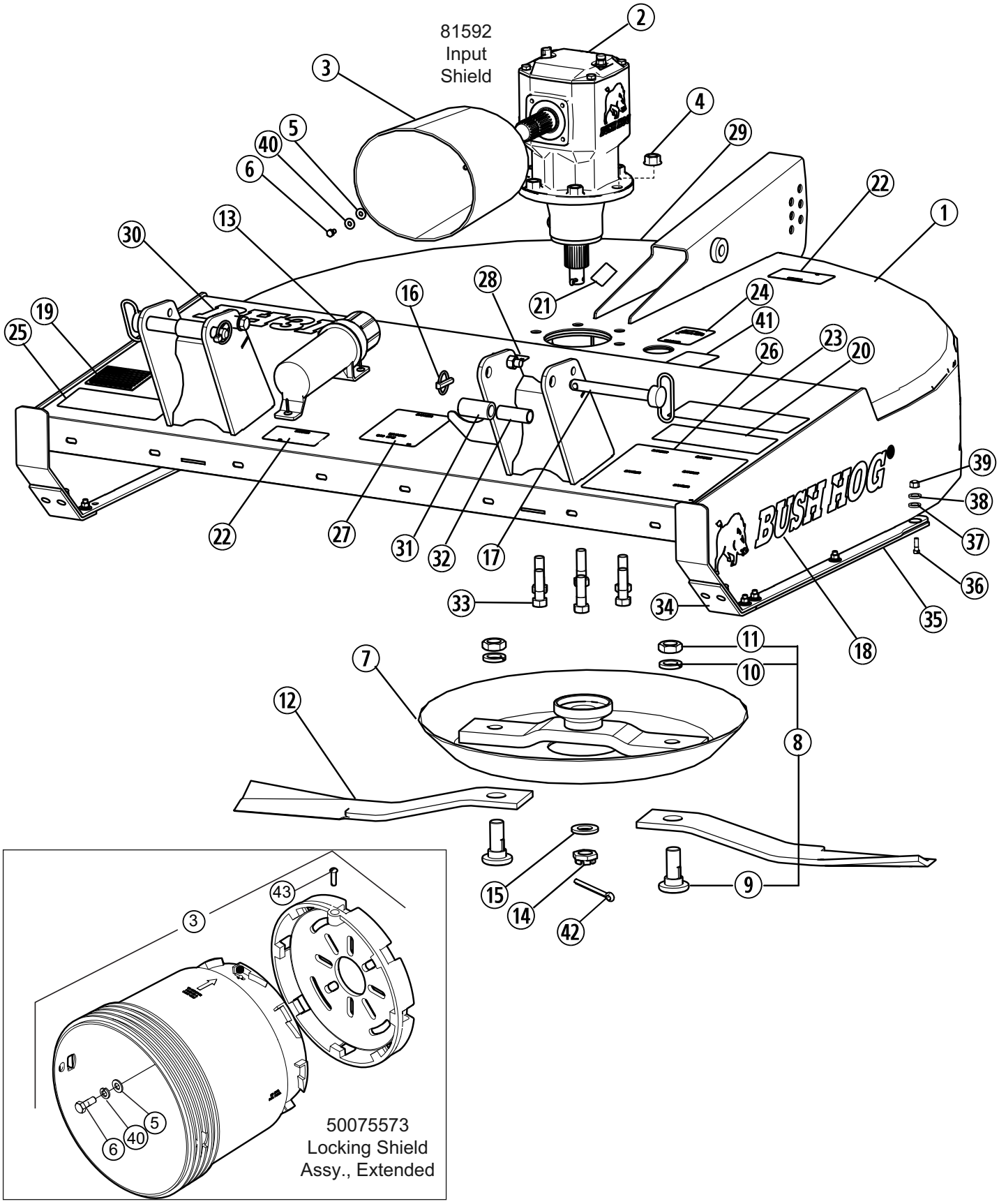

©2020 Alamo Group Inc.

BASE FRAME ASSEMBLY
MODEL BH316-2 ROTARY CUTTER

REF. NO.	PART NO.	DESCRIPTION	QTY. REQ'D.
1	——-	Deck Weldment, BH Red (50081801-10)	1
	——-	Deck Weldment, JD Green (50081801-16)	1
	——-	Deck Weldment, Kub Orange (50081801-23)	1
	——-	Deck Weldment, NH Blue (50081801-28)	1
2	00791059BH	Gearbox Assembly	1
3	81592	Input Shield	1
	50075573	Locking Shield Assy., Extended	1
4	20299	Locknut, 3/4" ZP	6
5	44216	Flatwasher, M8 ZP	4
6	90560	HHCS, M8 x 1.25 x 15 G8.8 w/Patch	4
7	50072533	Pan Weldment	1
8	63607	Blade Bolt Kit	2
9	7919BH	Blade Bolt	2
10	20322	Lockwasher, 1-1/8" CP	2
11	252BH	Jamnut, 1-1/8" NF	2
12	7556BH	Blade, 5' Uplift	2
13	50035829	Owners Manual Tube	1
14	00791093	Castle Nut M30 - 2	1
15	00791085	Shield, Protective	1
16	2850005	Klik Pin, 7/16" x 1-3/4"	2
17	50080166	Hitch Pin, 7/8" x 7"	2
18	50080370	Decal, BH - Reflect	2
19	50074259	Decal, Made in USA	1
	50070832	Decal Kit (items 20-29)	1
20	D813	Decal, Danger Multilingual	1
21	D454	Decal, Warning Crush Hazard	1
22	D614	Decal, Danger Thrown Objects	2
23	D590	Decal, Lube	1
24	D551	Decal, Blade Rotation CCW	1
25	D559	Decal, Genuine BH Parts	1
26	D549	Decal, Danger, Operation	1
27	D547	Decal, Danger	1
28	D546	Decal, Danger Guard Missing	1
29	50031214	Red Reflector	2
30	50080250	Decal, Model, BH316	1
31	91061	Spacer	2
32	91062	Spacer, Cat 2 Std	2
33	1162424	HHCS, 3/4" x 2-1/2" G5 ZP	6
34	50040387	Removable Front Skid	2
35	50040390	Removable Skid	2
36	3161212	#3 HD Plow BLT 3/8" x 1-1/4" G5	14
37	15915BH	Flatwasher 3/8" ZP	14
38	15812	Lockwasher 3/8" CP	14
39	8151200	Hex Nut 3/8" CP	14
40	44311BH	Lockwasher, M8 ZP	4
41	50081789	Decal, 10 Year Gearbox Warranty	1
42	2716423	Pin, Cotter M6 x 60	1
43	50075575	Turn Fastener, 1/4"	1

©2020 Alamo Group Inc.

BASE FRAME ASSEMBLY
MODEL BH317-2 ROTARY CUTTER

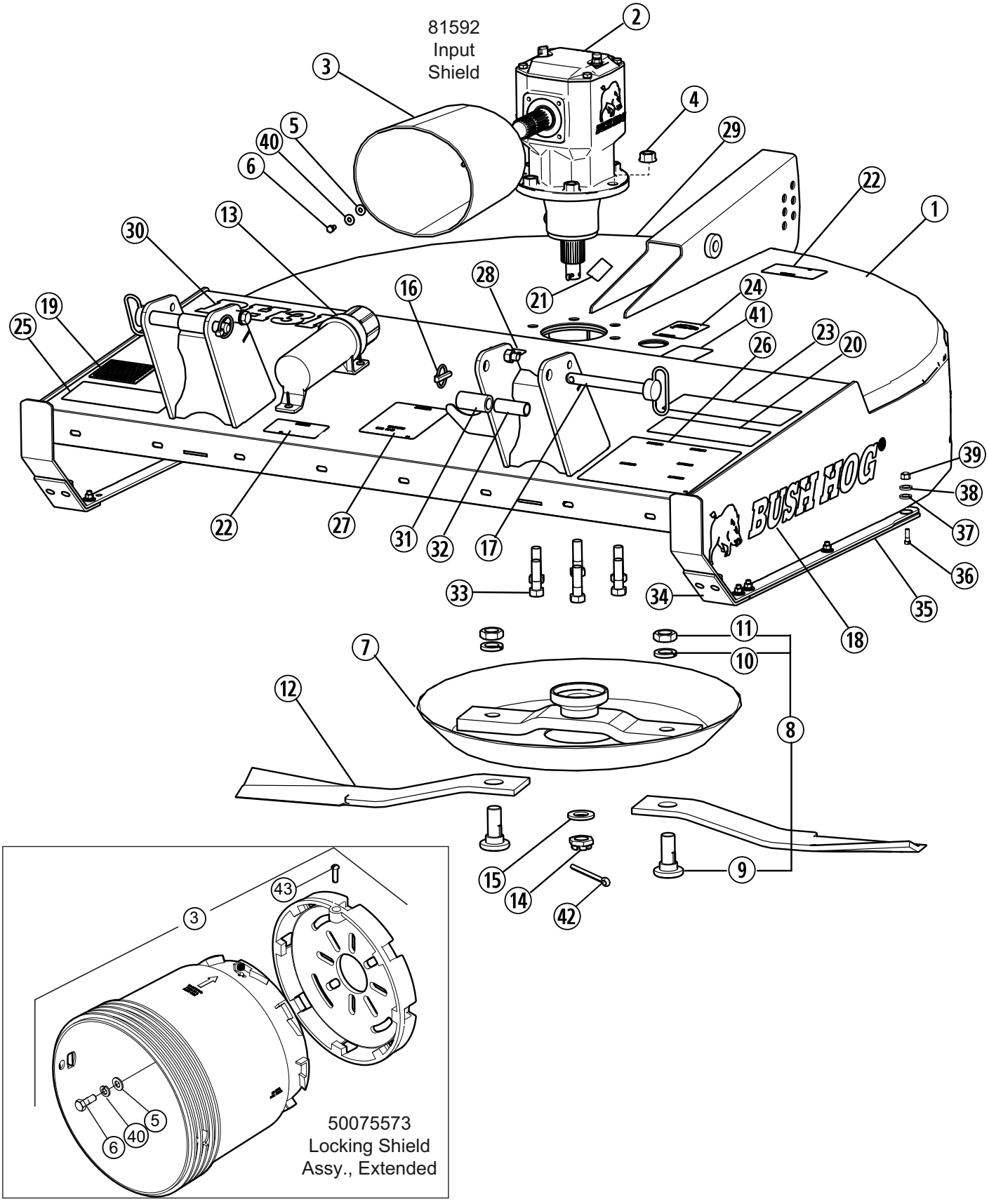

©2020 Alamo Group Inc.

BASE FRAME ASSEMBLY
MODEL BH317-2 ROTARY CUTTER

REF. NO.	PART NO.	DESCRIPTION	QTY. REQ'D.
1	——-	Deck Weldment, BH Red (50081805-10)	1
	——-	Deck Weldment, JD Green (50081805-16)	1
	——-	Deck Weldment, Kub Orange (50081805-23)	1
	——-	Deck Weldment, NH Blue (50081805-28)	1
2	00791057BH	Gearbox Assembly	1
3	81592	Input Shield	1
	50075573	Locking Shield Assy., Extended	1
4	20299	Locknut, 3/4" ZP	6
5	44216	Flatwasher, M8 ZP	4
6	90560	HHCS M8 x 1.25 x 15 G8.8 w/Patch	4
7	50072531	Pan Weldment	1
8	63607	Blade Bolt Kit	2
9	7919BH	Blade Bolt	2
10	20322	Lockwasher, 1-1/8" CP	2
11	252BH	Jamnut, 1-1/8" NF	2
12	7557BH	Blade, 5' Uplift	2
13	50035829	Owners Manual Tube	1
14	00791093	Castle Nut, M30 - 2	1
15	00791085	Shield, Protective	1
16	2850005	Klik Pin, 7/16" x 1-3/4"	2
17	50080167	Hitch Pin, 1-1/8" x 7"	2
18	50080370	Decal, BH - Reflect	2
19	50074259	Decal, Made in USA	1
	50070832	Decal Kit, (items 20-29)	1
20	D813	Decal, Danger Multilingual	1
21	D454	Decal, Warning Crush Hazard	1
22	D614	Decal, Danger Thrown Objects	2
23	D590	Decal, Lube	1
24	D551	Decal, Blade Rotation CCW	1
25	D559	Decal, Genuine BH Parts	1
26	D549	Decal, Danger, Operation	1
27	D547	Decal, Danger	1
28	D546	Decal, Danger Guard Missing	1
29	50031214	Red Reflector	2
30	50080251	Decal, Model, BH317	1
31	50081249	Spacer Bushing, (1.145" x 2" x 2.69L)	2
32	50081248	Cat III Bushing, (1.145" x 1.4375" x 2.88L)	2
33	1162424	HHCS, 3/4" x 2-1/2" G5 ZP	6
34	50040387	Removable Front Skid	2
35	50040390	Removable Skid	2
36	3161212	#3 HD Plow BLT 3/8" x 1-1/4" G5	14
37	15915BH	Flatwasher 3/8" ZP	14
38	15812	Lockwasher 3/8" CP	14
39	8151200	Hex Nut 3/8" CP	14
40	44311BH	Lockwasher, M8 ZP	4
41	50081789	Decal, 10 Year Gearbox Warranty	1
42	2716423	Pin, Cotter M6 x 60	1
43	50075575	Turn Fastener, 1/4"	1

©2020 Alamo Group Inc.

GEARBOX ASSEMBLY
540 RPM
MODEL BH315-2

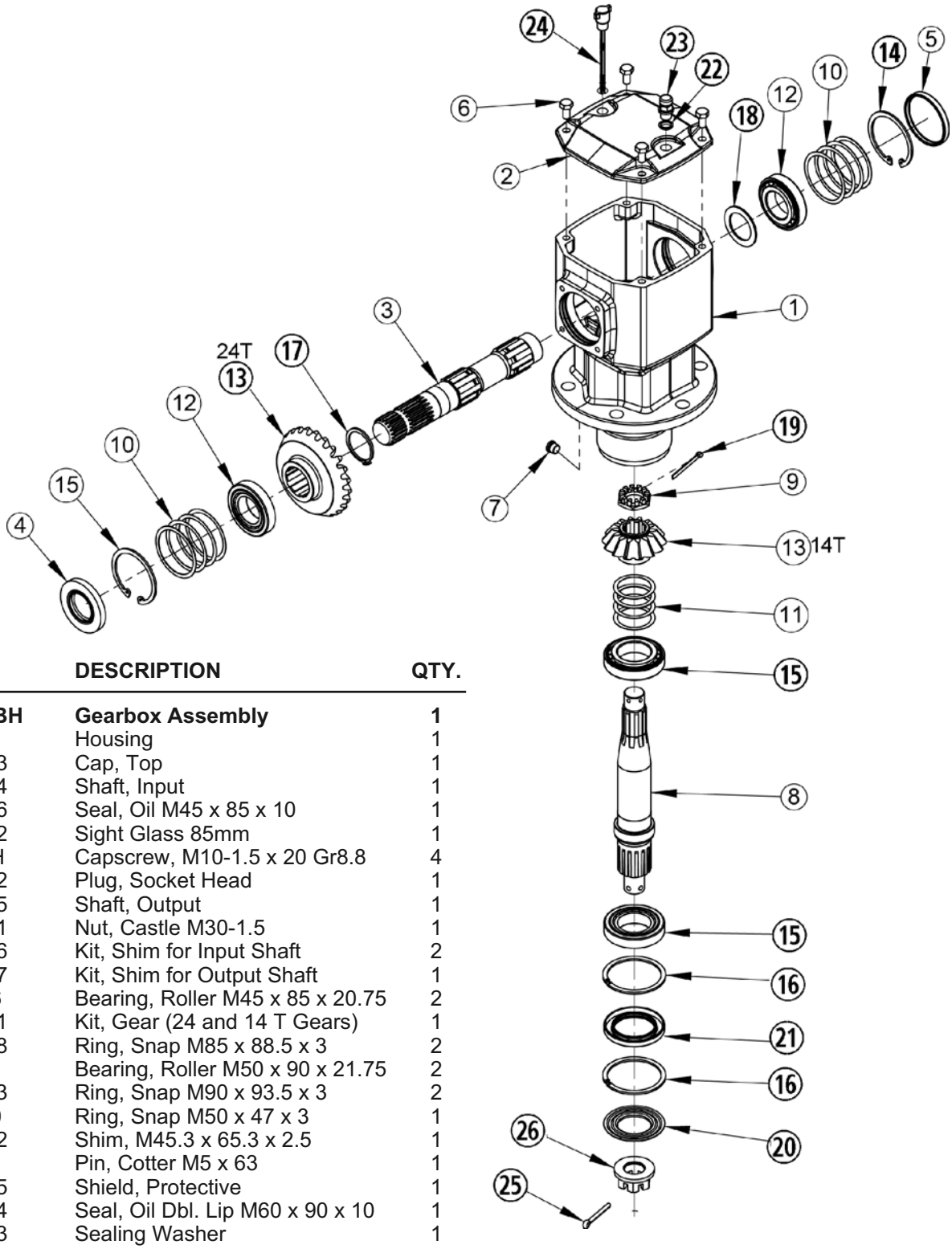

REF. NO.	PART NO.	DESCRIPTION	QTY.
	00791060BH	**Gearbox Assembly**	**1**
1	——	Housing	1
2	00791063	Cap, Top	1
3	00791064	Shaft, Input	1
4	50068116	Seal, Oil M45 x 85 x 10	1
5	50074092	Sight Glass 85mm	1
6	44390BH	Capscrew, M10-1.5 x 20 Gr8.8	4
7	00791032	Plug, Socket Head	1
8	00791065	Shaft, Output	1
9	00755621	Nut, Castle M30-1.5	1
10	00791066	Kit, Shim for Input Shaft	2
11	00791067	Kit, Shim for Output Shaft	1
12	0070796	Bearing, Roller M45 x 85 x 20.75	2
13	00791081	Kit, Gear (24 and 14 T Gears)	1
14	00755618	Ring, Snap M85 x 88.5 x 3	2
15	70800	Bearing, Roller M50 x 90 x 21.75	2
16	00791083	Ring, Snap M90 x 93.5 x 3	2
17	2516460	Ring, Snap M50 x 47 x 3	1
18	00755632	Shim, M45.3 x 65.3 x 2.5	1
19	70499	Pin, Cotter M5 x 63	1
20	00791085	Shield, Protective	1
21	00791084	Seal, Oil Dbl. Lip M60 x 90 x 10	1
22	00790983	Sealing Washer	1
23	00790985	Plug, Vent M16 -1.5	1
24	4038611	Dipstick, Oil	1
25	2716423	Pin, Cotter M6 x 60	1
26	00791093	Nut, Castle M30-2	1

©2020 Alamo Group Inc.

GEARBOX ASSEMBLY
540 RPM
MODEL BH316-2

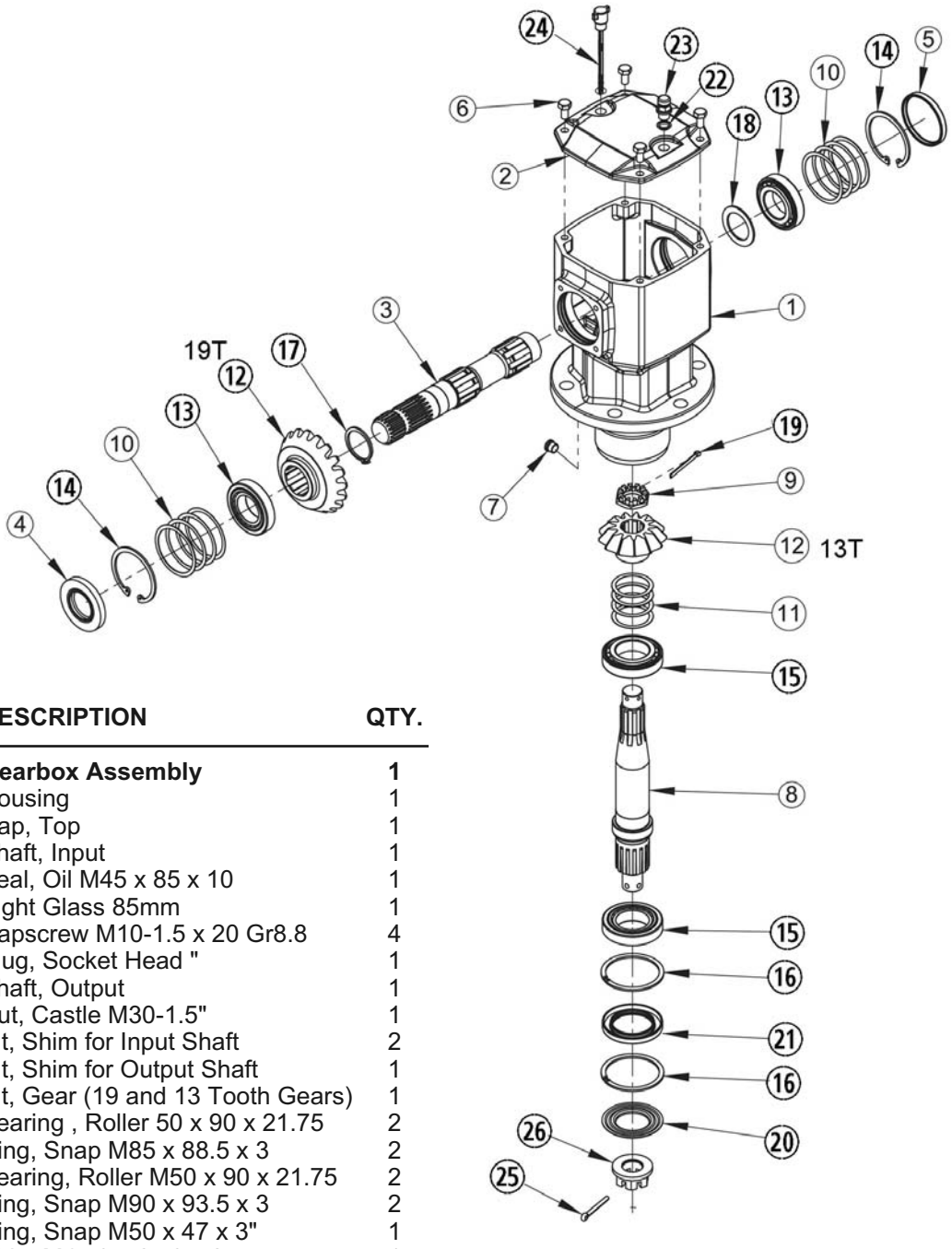

REF. NO.	PART NO.	DESCRIPTION	QTY.
	00791059BH	**Gearbox Assembly**	**1**
1	——-	Housing	1
2	00791063	Cap, Top	1
3	00791064	Shaft, Input	1
4	50068116	Seal, Oil M45 x 85 x 10	1
5	50074092	Sight Glass 85mm	1
6	44390BH	Capscrew M10-1.5 x 20 Gr8.8	4
7	00791032	Plug, Socket Head "	1
8	00791065	Shaft, Output	1
9	00755621	Nut, Castle M30-1.5"	1
10	00791066	Kit, Shim for Input Shaft	2
11	00791067	Kit, Shim for Output Shaft	1
12	00791080	Kit, Gear (19 and 13 Tooth Gears)	1
13	70796	Bearing , Roller 50 x 90 x 21.75	2
14	00755618	Ring, Snap M85 x 88.5 x 3	2
15	70800	Bearing, Roller M50 x 90 x 21.75	2
16	00791083	Ring, Snap M90 x 93.5 x 3	2
17	2516460	Ring, Snap M50 x 47 x 3"	1
18	00755632	Shim M45.3 x 65.3 x 2.5	1
19	70499	Pin Cotter M5 x 63	1
20	00791085	Shield, Protective"	1
21	00791084	Seal, Oil Dbl. Lip M60 x 90 x 10	1
22	00790983	Sealing Washer	1
23	00790985	Plug, Vent M16 -1.5	1
24	4038611	Dipstick, Oil	1
25	2716423	Pin, Cotter M6 x 60	1
26	00791093	Nut, Castle M30-2	1

©2020 Alamo Group Inc.

GEARBOX ASSEMBLY
540 RPM
MODEL BH317-2

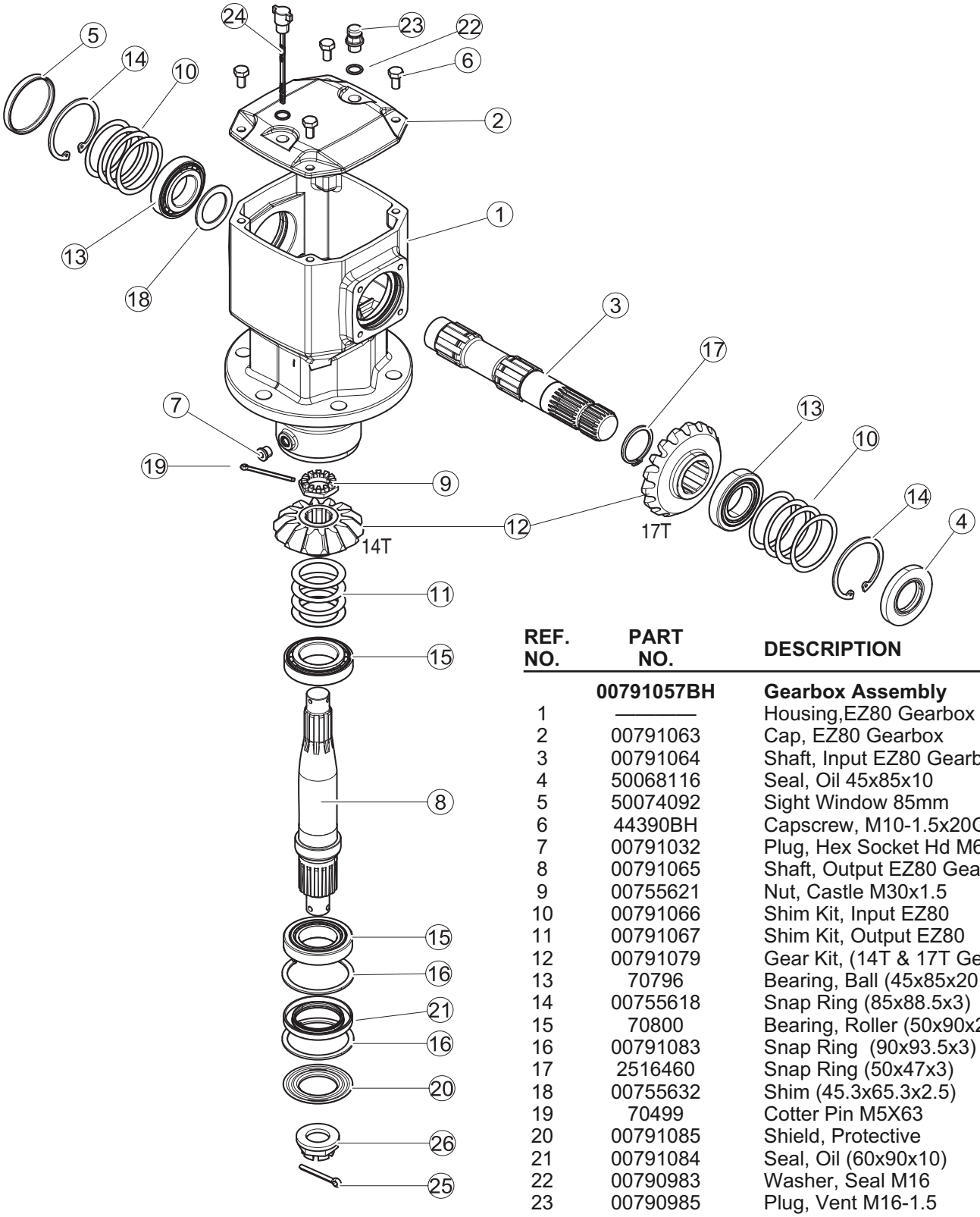

REF. NO.	PART NO.	DESCRIPTION	QTY.
	00791057BH	**Gearbox Assembly**	**1**
1	————	Housing,EZ80 Gearbox	1
2	00791063	Cap, EZ80 Gearbox	1
3	00791064	Shaft, Input EZ80 Gearbox	1
4	50068116	Seal, Oil 45x85x10	1
5	50074092	Sight Window 85mm	1
6	44390BH	Capscrew, M10-1.5x20Gr.8.8	4
7	00791032	Plug, Hex Socket Hd M6	1
8	00791065	Shaft, Output EZ80 Gearbox	1
9	00755621	Nut, Castle M30x1.5	1
10	00791066	Shim Kit, Input EZ80	2
11	00791067	Shim Kit, Output EZ80	1
12	00791079	Gear Kit, (14T & 17T Gears)	1
13	70796	Bearing, Ball (45x85x20.75)	2
14	00755618	Snap Ring (85x88.5x3)	2
15	70800	Bearing, Roller (50x90x21.75)	2
16	00791083	Snap Ring (90x93.5x3)	2
17	2516460	Snap Ring (50x47x3)	1
18	00755632	Shim (45.3x65.3x2.5)	1
19	70499	Cotter Pin M5X63	1
20	00791085	Shield, Protective	1
21	00791084	Seal, Oil (60x90x10)	1
22	00790983	Washer, Seal M16	1
23	00790985	Plug, Vent M16-1.5	1
24	4038611	Dipstick	1
25	2716423	Cotter Pin M6x60	1
26	00791093	Nut, Castle M30-2.5	1

©2020 Alamo Group Inc.

DRIVELINE ASSEMBLY
540 RPM
MODEL BH315-2

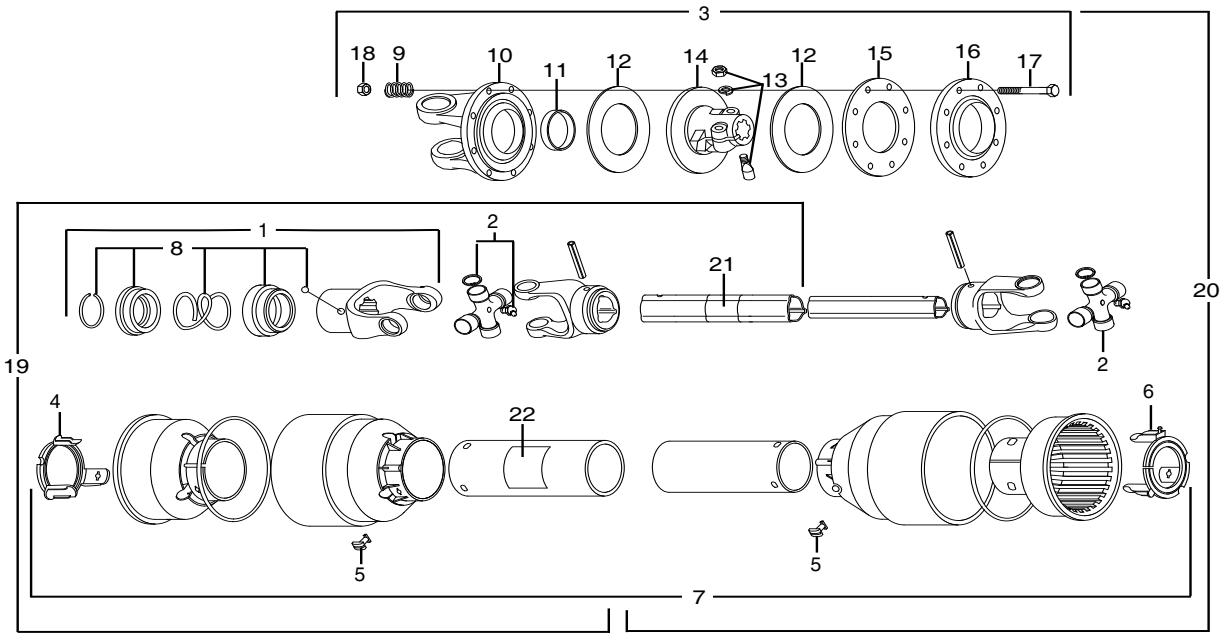

Ref. No.	Part No.	Description	Qty. Req'd.
	50053135	**Driveline Assy**	1
1	76801	Complete Collar Yoke	1
2	64610	Cross Journal Set	2
3	50050544	Complete Disc Clutch F29	1
4	50053169	Guard Retaining Collar, Outer	1
5	50050289	Bolt	6
6	50053240	Guard Retaining Collar, Inner	1
7	50053253	Complete Shield	1
8	50017480	Ball Collar Kit 1-3/8"	1
9	76080	Spring	8
10	76081	Flanged Yoke	1
11	76082	Bushing	1
12	76083	Lining Ring	2
13	76247	Tapered Pin Set 1-3/4"	1
14	76309	Clutch Support F29	1
15	76085	Inner Plate	1
16	76086	Pressure Plate	1
17	44155BH	Capscrew M10 X 1.5 X 85	8
18	44154BH	Lock Nut M10 X 1.5	8
19	——-	Half Female Shaft W/ Shield	1
20	——-	Half Male Shaft W/ Shield	1
21	78786	Danger Decal, Outer Tube	1
22	78608	Danger Decal, Outer Shield	1

©2020 Alamo Group Inc.

DRIVELINE ASSEMBLY
540 RPM
MODEL BH316-2

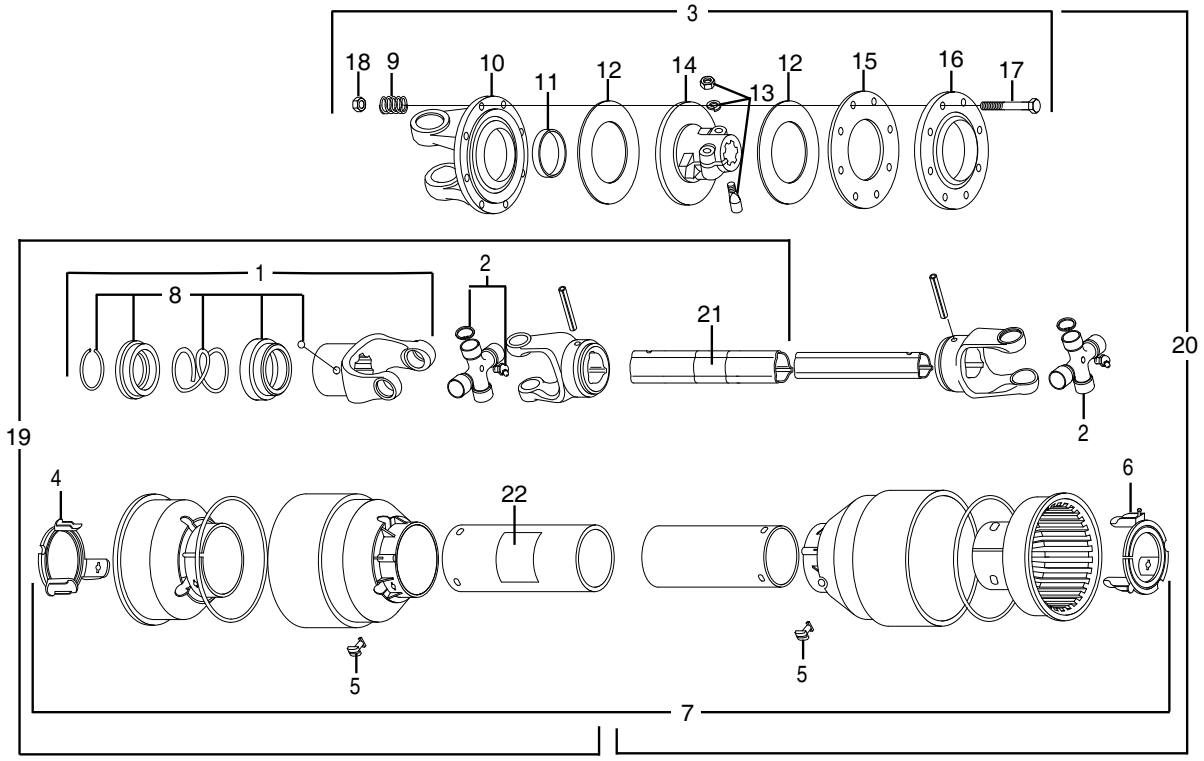

REF. NO.	PART NO.	DESCRIPTION	QTY.
	50053133SP	**Driveline Assembly**	**1**
1	76801	Complete Collar Yoke	1
2	64610	Cross Journal Set	2
3	50050544	Complete Disc Clutch F29	1
4	50053169	Guard Retaining Collar, Outer	1
5	50056404	Bolt	6
6	50053240	Guard Retaining Collar, Inner	1
7	50053249	Complete Shield	1
8	50017480	Ball Collar Kit 1-3/8”	1
9	76080	Spring	8
10	76081	Flanged Yoke	1
11	76082	Bushing	1
12	76083	Lining Ring	2
13	76247	Tapered Pin Set 1-3/4”	1
14	76309	Clutch Support F29	1
15	76085	Inner Plate	1
16	76086	Pressure Plate	1
17	44155BH	Capscrew, M10 x 1.5 x 85	8
18	44154BH	LockNut, M10 x 1.5	8
19	——-	Half Female Shaft w/ Shield	1
20	——-	Half Male Shaft w/ Shield	1
21	78786	Danger Decal, Outer Tube	1
22	78608	Danger Decal, Outer Shield	1

©2020 Alamo Group Inc.

DRIVELINE ASSEMBLY
540 RPM
MODEL BH317-2

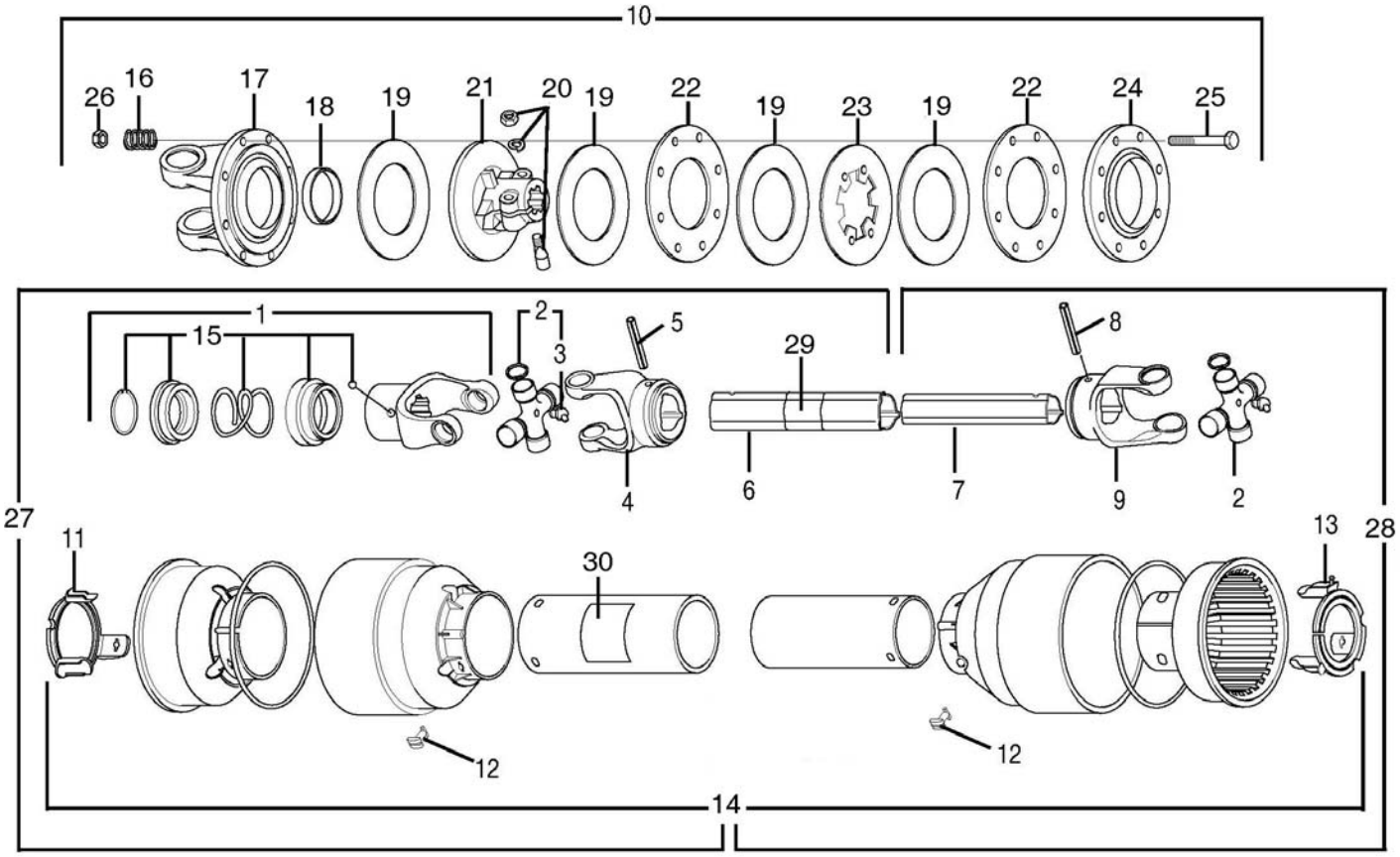

Ref. No.	Part No.	Description	Qty. Req'd.
	76994	**Driveline Assy**	**1**
1	76802	Ball Collar Yoke	1
2	64663	Cross Journal Set	2
3	63956	Grease Nipple	2
4	66865	Outer Yoke	1
5	66866	Roll Pin For Outer Tube	1
6	67006	Outer Tube	1
7	66868	Inner Tube	1
8	66869	Roll Pin For Inner Tube	1
9	66870	Inner Yoke	1
10	76456	Complete Disc Clutch F49	1
11	76057	Guard Retaining Collar, Outer	1
12	87992	Bolt	6
13	76059	Guard Retaining Collar, Inner	1
14	76150	Complete Shield	1

Ref. No.	Part No.	Description	Qty. Req'd.
15	50017480	Ball Collar Kit 1-3/8"	1
16	76080	Spring	8
17	76164	Flanged Yoke	1
18	76082	Bushing	1
19	76083	Lining Ring	4
20	76247	Tapered Pin Set 1-3/4"	1
21	76458	Clutch Support F49	1
22	76085	Inner Plate	2
23	76197	Intermediate Plate	1
24	76086	Pressure Plate	1
25	44159BH	Capscrew, M10 x 1.5 x 100	8
26	44154BH	Lock Nut, M10 x 1.5	8
27	——-	Half Female Shaft W/ Shield	1
28	——-	Half Male Shaft W/ Shield	1
29	78786	Danger Decal, Outer Tube	1
30	78608	Danger Decal, Outer Shield"	1

©2020 Alamo Group Inc.

HITCH ASSEMBLY
All Models BH315-2, BH316-2 & BH317-2

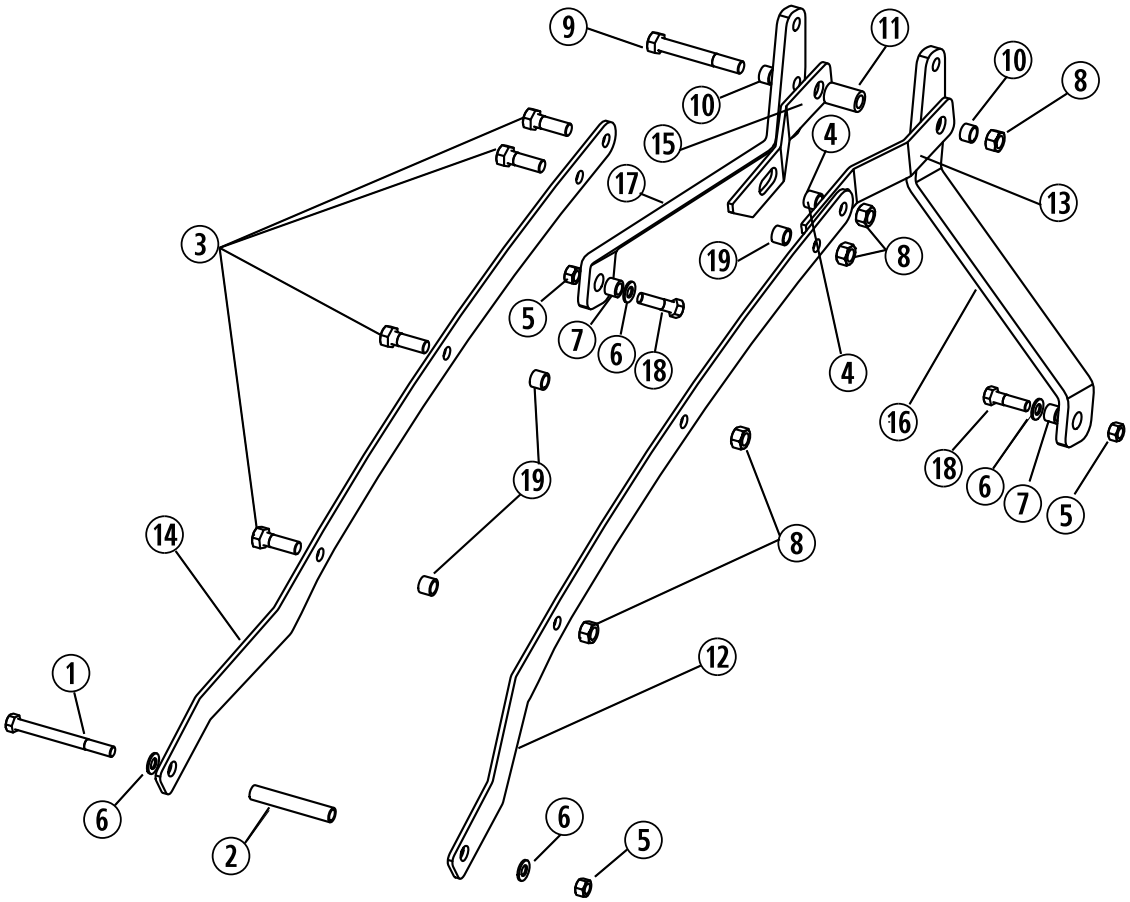

REF. NO.	PART NO.	DESCRIPTION	QTY.
1	20294	HHCS, 5/8” x6-1/2” G5 ZP	1
2	50080067	Bushing, .88 “x .67” x 5.3” OL	1
3	20510	HHCS, 3/4” x 2-1/4” G5 ZP	4
4	50050393	Wear Bushing	1
5	15598BH	Locknut, 5/8” CP	3
6	20748	Flatwasher, 5/8” SAE ZP	4
7	50050555	Strut Weldment Bushing	2
8	20638	Locknut, 3/4” CP	5
9	19037	HHCS, 3/4” x 5-1/2” G5 ZP	1
10	50050392	Spacer Bushing	2
11	50033665	Cat 1 QH Top Bushing	1
12	50080066	RH Strut, BH315-2	1
	50080104	RH Strut, BH316-2	1
	50080149	RH Strut, BH317-2	1
13	50080063	Toggle, RH	1
14	50080065	LH Strut, BH315-2	1
	50080103	LH Strut, BH316-2	1
	50080148	LH Strut, BH317-2	1
15	50080062	Toggle, LH	1
16	50082001	RH Riser Strut, BH315-2/BH316-2	1
	50082004	RH Riser Strut, BH317-2	1
17	50082000	LH Riser Strut, BH315-2/BH316-2	1
	50082003	LH Riser Strut, BH317-2	1
18	19053	HHCS, 5/8” x 2-1/4” G5 ZP	2
19	50080366	Bushing	3

©2020 Alamo Group Inc.

SINGLE TAILWHEEL and RELATED PARTS
All Models BH315-2, BH316-2, & BH317-2

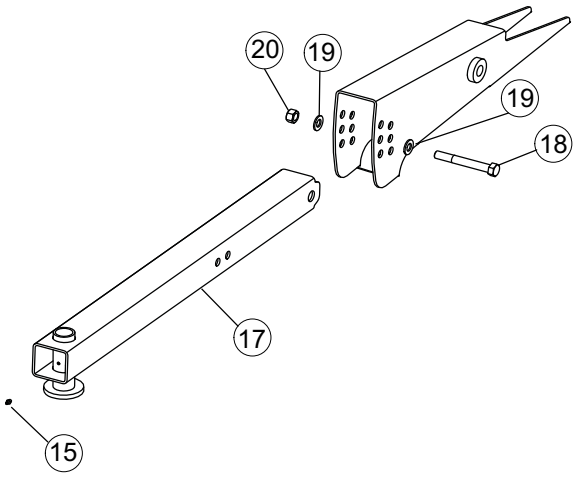

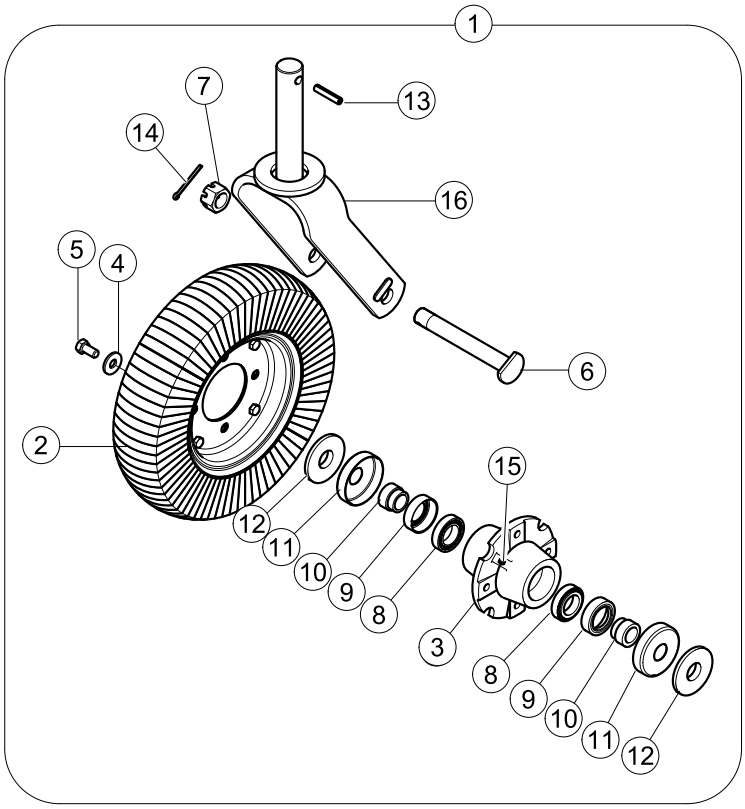

REF. NO.	PART NO.	DESCRIPTION	QTY.
1	**50069838**	**Tailwheel Assy.**	**1**
2	500BH	Solid Tire Assy.	1
3	50068522	Hub Casting	1
4	44269	Flatwasher, M12	4
5	44204BH	Capscrew, M12 x 1.75 x 25 Gr8.8	4
6	50067488	Axle Bolt ,3/4” -16 Thread	2
7	120BH	Slotted Nut, 3/4”- 16 Thread	1
8	50068521	Bearing Assy.	2
9	50068525	Seal	2
10	50068523	Bushing	2
11	50068520	Cap, Protective	2
12	50068524	Washer	2
13	44824BH	Roll Pin, 1/2” x 2-1/2”	1
14	20167	Cotter Pin, 3/16” x 2”	1
15	449BH	Grease Fitting	2
16	50069839	Fork Assy.	1
17	50080190	Tailwheel Tube Weld. for BH315-2	1
	50080203	Tailwheel Tube Weld. for BH316-2	1
	50080146	Tailwheel Tube Weld. for BH317-2	1
18	44625	Capscrew, 5/8” x 4-3/4” Gr.5	1
19	20748	Flatwasher, 5/8”	2
20	15598BH	Locknut 5/8”	1

©2020 Alamo Group Inc.

DUAL TAILWHEEL and RELATED PARTS
MODEL BH317-2

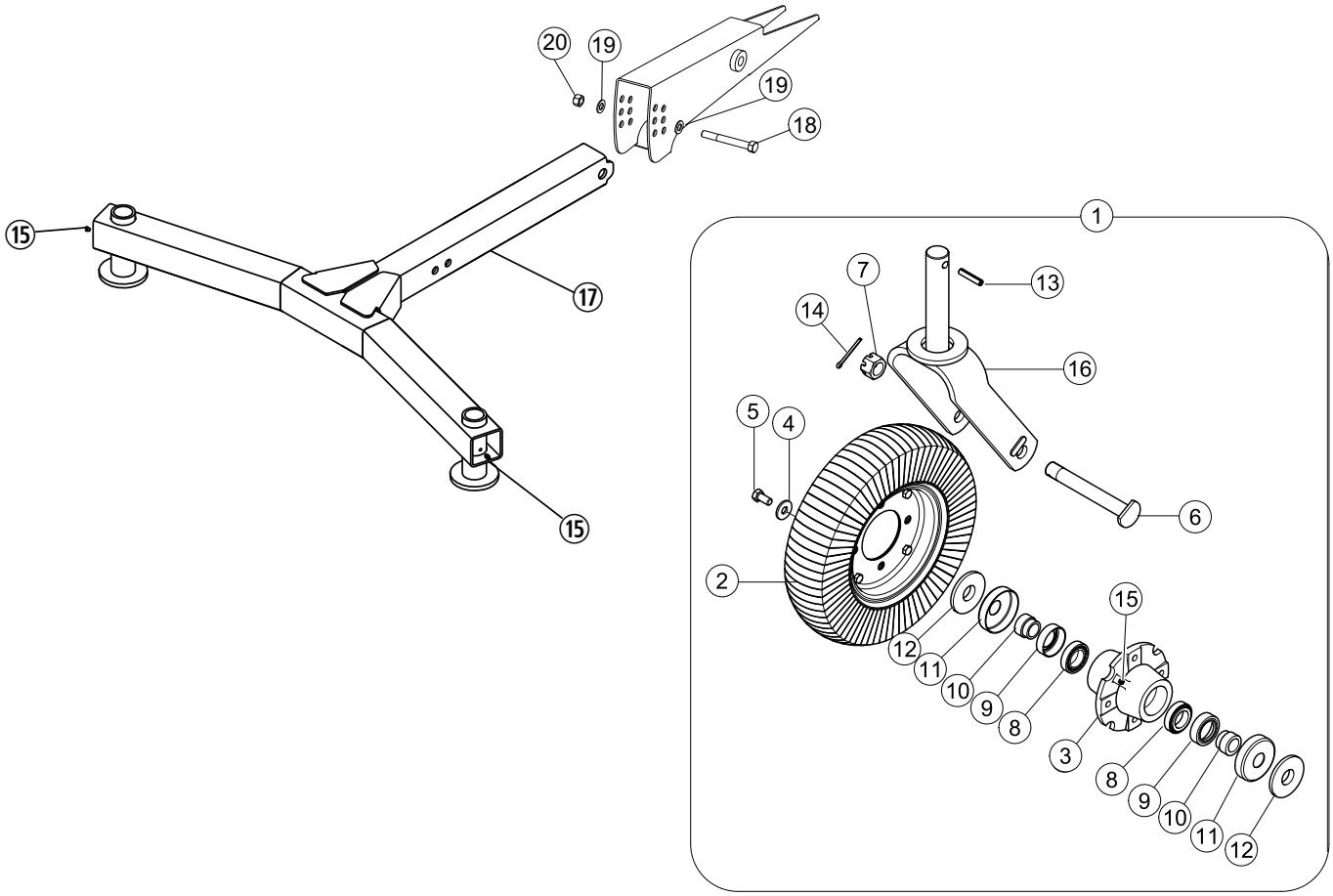

REF. NO.	PART NO.	DESCRIPTION	QTY.
1	**50069838**	**Tailwheel Assy.**	**2**
2	500BH	Solid Tire Assy.	2
3	50068522	Hub Casting	2
4	44269	Flatwasher, M12	8
5	44204BH	Capscrew, M12 x 1.75 x 25 Gr8.8	8
6	50067488	Axle Bolt, 3/4” -16 Thread	4
7	120BH	Slotted Nut, 3/4”- 16 Thread	2
8	50068521	Bearing Assy.	4
9	50068525	Seal	4
10	50068523	Bushing	4
11	50068520	Cap, Protective	4
12	50068524	Washer	4
13	44824BH	Roll Pin,1/2” x 2-1/2”	2
14	20167	Cotter Pin, 3/16” x 2”	2
15	449BH	Grease Fitting	4
16	50069839	Fork Assy.	2
17	50080396	Tailwheel Tube Weld. for BH317-2	1
18	44625	Capscrew, 5/8” x 4-3/4” Gr.5	1
19	20748	Flatwasher, 5/8	2
20	15598BH	Locknut, 5/8”	1

©2020 Alamo Group Inc.

BUSH HOG®

2501 GRIFFIN AVE.• SELMA, AL 36703
WWW.BUSHHOG.COM