4815RR1, 4810RR1
14815RR1, 14810RR1

BUSH HOG® FLEX WING ROTARY CUTTER

Revised 05/22

PARTS MANUAL
SECTION 112

An Operator's Manual was shipped with the equipment. The Operator's Manual is an integral part of the safe operation of this machine and must be maintained with the unit at all times. **READ, UNDERSTAND, and FOLLOW** the Safety and Operation Instructions contained in this manual before operating the equipment. If the Operator's Manual is not with the equipment, contact your dealer or Bush Hog to obtain a copy before operating the equipment.

Safety Video

Important Operating and Safety Instructions are found in the Mower Safety Video that can be instantly accessed on the internet at: www.algqr.com/bve

www.algqr.com/bve

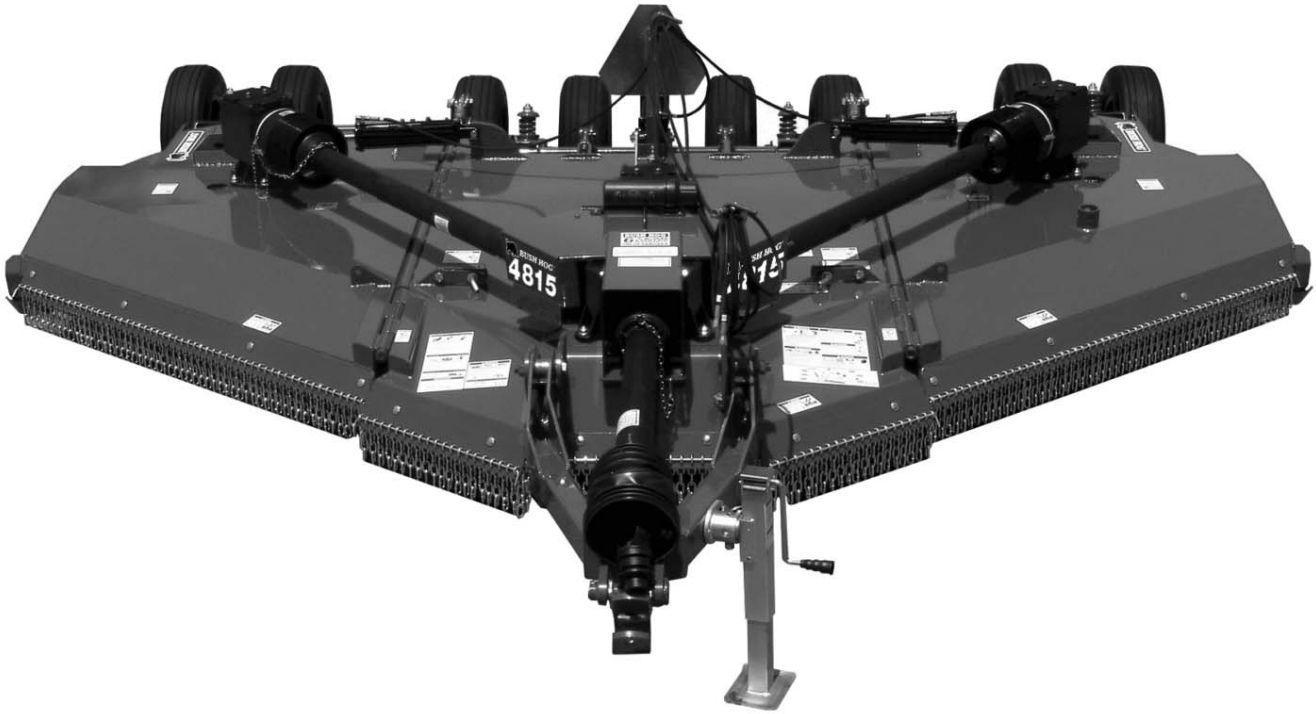

BUSH HOG®
2501 Griffin Ave.
Selma, AL 36703
Parts Ordering 1-800-304-2836
www.bushhog.com

ATTENCIÓN!

Si No Lee Ingles, Pida Ayuda a Alguien Que Si Lo Lea Para Que le Traduzca las Medidas de Sequridad.

LEA EL INSTRUCTIVO

MEMBER OF THE ALAMO GROUP
ALWAYS ON THE CUTTING EDGE®

© 2016 Alamo Group Inc.

PARTS ORDERING GUIDE

The following instructions are offered to help eliminate needless delay and error in processing purchase orders for the equipment in this section.

1. The Parts Section is prepared in logical sequence and grouping of parts that belong to the basic machine featured in this manual. Part Numbers and Descriptions are given to help locate the parts and quantities required.

2. The Purchase Order must include the name and address of the person or organization ordering the parts, who should be charged, and if possible, the serial number of the machine for which the parts are ordered.

3. The Purchase Order must clearly list the quantity of each part, the complete and correct part number (be sure to include all periods), and the basic name of the part.

4. The Manufacturer reserves the right to substitute parts where applicable.

5. Some parts are unlisted items which are special production items not normally stocked and are subject to special handling. Request a quotation for such parts before sending a Purchase Order.

6. The Manufacturer reserves the right to change prices without prior notice.

For maximum safety and to guarantee optimum product reliability, always use genuine BUSH HOG Parts. The use of inferior replacement parts may cause premature or catastrophic failure which could result in serious injury or death.Direct any questions regarding parts to:

BUSH HOG
2501 Griffin Ave.
Selma, AL 36703
www.bushhog.com
Contact Us
800-304-2836

BUSH HOG®

To the Owner/Operator/Dealer

All implements with moving parts are potentially hazardous. There is no substitute for a cautious, safe-minded operator who recognizes the potential hazards and follows reasonable safety practices. The manufacturer has designed this implement to be used with all its safety equipment properly attached to minimize the chance of accidents.

BEFORE YOU START! Read the safety messages on the implement and shown in your manual. Observe the rules of safety and common sense!

WARRANTY INFORMATION:
Read and understand the complete Warranty Statement found in this Manual. Fill out the Warranty RegistrationForm in full and return it to within 30 Days. Make certain the Serial Number of the Machine is recorded on theWarranty Card and on the Warranty Form that you retain.

WARRANTY

LIMITED WARRANTY

Bush Hog warrants to the original purchaser of any new Bush Hog equipment, purchased from an authorized Bush Hog dealer, that the equipment be free from defects in material and workmanship for a period of one (1) year for non-commercial, state and municipalities' use and ninety (90) days for commercial use from date of retail sale. The obligation of Bush Hog to the purchaser under this warranty is limited to the repair or replacement of defective parts.

Replacement or repair parts installed in the equipment covered by this limited warranty are warranted for ninety (90) days from the date of purchase of such part or to the expiration of the applicable new equipment warranty period, whichever occurs later. Warranted parts shall be provided at no cost to the user at an authorized Bush Hog dealer during regular working hours. Bush Hog reserves the right to inspect any equipment or parts which are claimed to have been defective in material or workmanship.

In addition to the standard Limited Warranty shown above, Bush Hog also provides:

A TEN-YEAR (120 months) GEARBOX LIMITED WARRANTY* (6 Years Full Coverage; Parts Only for Years 7 through 10) provided they have been properly maintained† and have not been subjected to abuse or mis-use except as limited below.

***WARRANTY LIMITATIONS - GEARBOX**

A. Gearbox warranty extends to the original purchaser of a Bush Hog Rotary Cutter Only.
B. Warranty claimant must provide proper product registration and original receipt for purchase.
C. Bush Hog reserves the right to warrant Gearboxes and components at our discretion based on photographic or video evidence of product failure.
D. If Bush Hog deems a Gearbox failed due to defects in materials or workmanship, users' Gearboxes may be rebuilt by Bush Hog or replaced by new or rebuilt Gearboxes at the option of Bush Hog.

A ONE-YEAR (12 months) LIMITED WARRANTY** on the DRIVELINE components provided they have been properly maintained† and have not been subjected to abuse or mis-use.

* *WARRANTY LIMITATIONS - DRIVELINE

A. A ONE-YEAR (12 months) DRIVELINE LIMITED WARRANTY applies to SHIELDS except where evidence of wear from contact with other parts on the shield voids this warranty.
B. Shield Bearings are wearing parts and are not warrantable.
C. Slip-Clutch Plates are wearing parts and are not warrantable. Evidence of "burning up" Slip-Clutch Plates due to improper adjustment will void warranty on Slip-Clutch Parts.

† NOTE - "*properly maintained*" specifically includes, but is not limited to:

A) Running Gearboxes with the proper amount of the correct lubricant.
B) Adjusting Slip-Clutches correctly to provide proper protection for Driveline and Gearbox components.
C) Proper lubrication of all DRIVELINE components as specified.
D) Maintaining proper bearing preload on all Gearbox shafts.

WARRANTY

DISCLAIMER OF IMPLIED WARRANTIES & CONSEQUENTIAL DAMAGES

Bush Hog's obligation under this limited warranty, to the extent allowed by law, is in lieu of all warranties, implied or expressed, INCLUDING IMPLIED WARRANTIES OF MERCHANTABILITY AND FITNESS FOR A PARTICULAR PURPOSE and any liability for incidental and consequential damages with respect to the sale or use of the items warranted. Such incidental and consequential damages shall include but not be limited to: transportation charges other than normal freight charges; cost of installation other than cost approved by Bush Hog; duty; taxes; charges for normal service or adjustment; loss of crops or any other loss of income; rental of substitute equipment, expenses due to loss, damage, detention or delay in the delivery of equipment or parts resulting from acts beyond the control of Bush Hog.

THIS LIMITED WARRANTY SHALL NOT APPLY:

1. To vendor items which carry their own warranties.
2. If the unit has been subjected to misapplication, abuse, misuse, negligence, fire or other accident.
3. If parts not made or supplied by Bush Hog have been used in connection with the unit, if, in the sole judgment of Bush Hog such use affects its performance, stability or reliability.
4. If the unit has been altered or repaired outside of an authorized Bush Hog dealership in a manner which, in the sole judgment of Bush Hog, affects its performance, stability or reliability.
5. To normal maintenance service and normal replacement items such as gearbox lubricant, hydraulic fluid, worn blades, or to normal deterioration of such things as belts and exterior finish due to use or exposure.
6. To expendable or wear items such as teeth, chains, sprockets, belts, springs and any other items that in the company's sole judgment is a wear item.

IN ORDER FOR WARRANTIES TO BE PROCESSED, PRODUCT WARRANTY REGISTRATION MUST BE FILED WITH BUSH HOG THROUGH THE SELLING DEALER.

Retain original purchase receipt and record the model number, serial number and date of purchase. This information will be helpful to your dealer if parts or services are required.

MODEL NUMBER _____
SERIAL NUMBER _____
DATE OF PURCHASE _____

NO EMPLOYEE OR REPRESENTATIVE OF BUSH HOG IS AUTHORIZED TO CHANGE THIS LIMITED WARRANTY IN ANY WAY OR GRANT ANY OTHER WARRANTY UNLESS SUCH CHANGE IS MADE IN WRITING AND SIGNED BY BUSH HOG'S SERVICE MANAGER, 2501 GRIFFIN AVE., SELMA, AL. 36703

4815RR1 & 14815RR1
4810RR1, 14810RR1 (Discontinued)
ROTARY CUTTER

ALPHABETICAL INDEX

CONTENTS **PAGE**

Axle, Center & Wing Units 112-5-4
Axle, Single & Dual 112-5-5
Axle, Tandem 112-5-6
Baffle Kit....112-6-1
Base Assembly, Center 112-1-2, 112-1-3
Base Assembly, R.H. Wing & L.H. Wing 112-1-4, 112-1-5
Blades & Blade Holders ....See Base Assemblies
Chain, Safety Tow....112-5-1
Chains, Discharge Safety....112-2-1 through 112-2-2
Cylinders, Hydraulic ....112-7-3 through 112-7-4
Decal Kits....112-1-1
Driveline Holder Assembly....112-5-2
Driveline Holder - CV Driveline EZ Mount....112-5-3
Driveshafts, Comer / EG ....112-4-1 through 112-4-6
Gearbox, Transfer 540 RPM (Mfg. by Comer)....112-3-1
Gearbox, Transfer 1000 RPM (Mfg. by Comer)....112-3-2
Gearbox, Center and L.H. Wing 540 RPM....112-3-3
Gearbox, R.H. Wing 540 RPM....112-3-4
Gearbox, Center 1000 RPM 112-3-3
Gearbox, L. H. Wing 1000 RPM 112-3-5
Gearbox, R.H. Wing 1000 RPM....112-3-6
Hitch Assembly, Ball Type 112-5-2
Hitch Assemblies, Swivel Pivot....112-5-2
Hydraulic Fittings To Tractor Remotes ....112-7-1 through 112-7-2
Jackstand....112-5-1
LED Light Kit (Rear Lights Only)....112-1-8
Leveling Rod Assembly 112-5-1
Shield, Wing Driveshafts....112-2-4
Shield Assembly, Center....112-2-3
SMV Sign & Hose Holder....112-1-7
Tire, Airplane....112-5-7
Tire, Solid & Foam Filled....112-5-7 & 112-5-9
Tongue Assembly 112-5-1
Weight Box Assembly, 4810R & 14810R (Discontinued) 112-1-6

© 2016 Alamo Group Inc.

DECAL KITS
FOR 4815RR1, 4810RR1, 14815RR1 & 14810RR1 MODELS

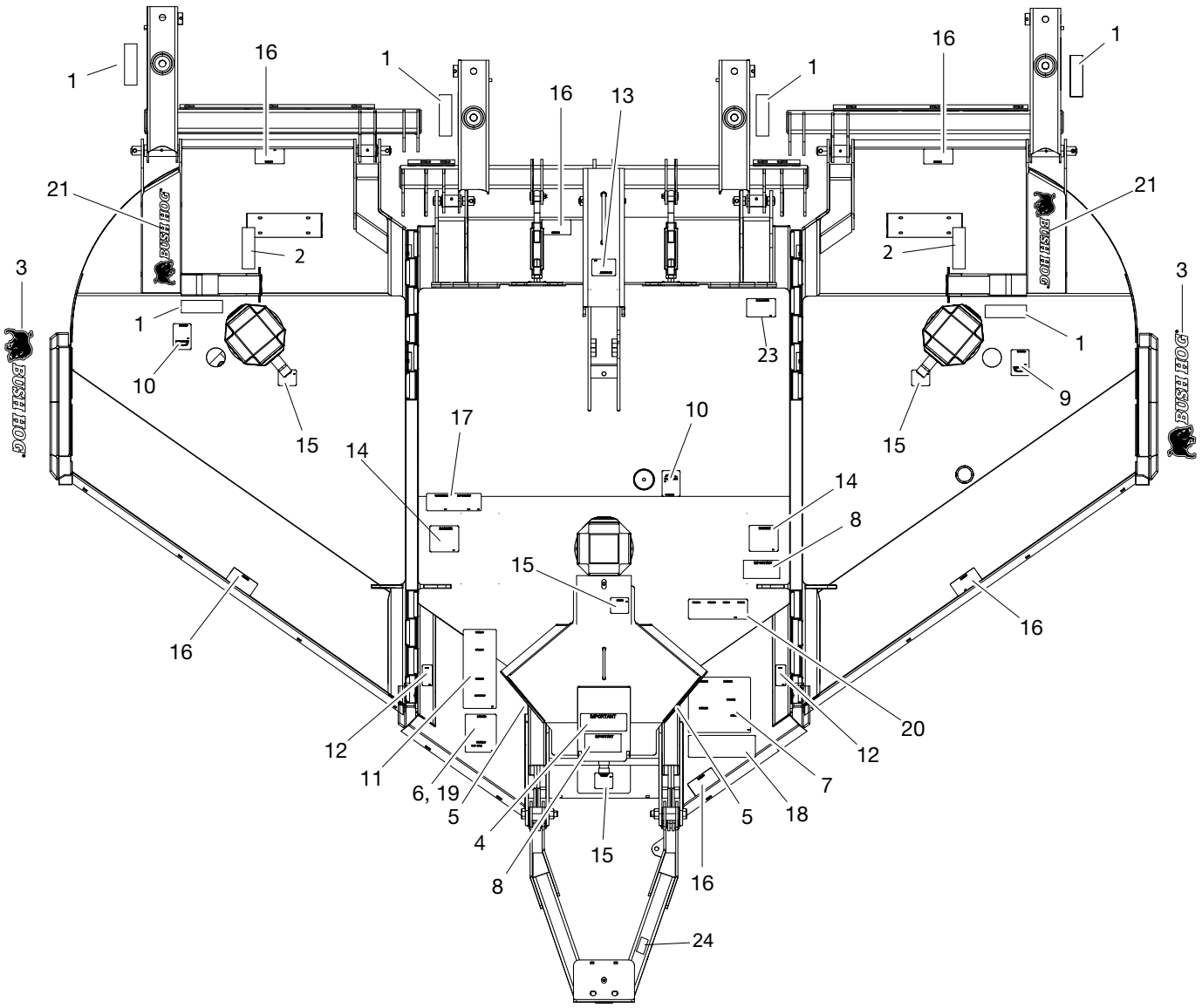

REF. NO.	PART NO.	DESCRIPTION	QTY.
	50076473	**Decal Kit For 4815RR1/14815RR1**	**1**
	50076473	**Decal Kit For 4810RR1/14810RR1**	**1**
1	50031212	Decal, Amber Reflector	6
2	50031214	Decal, Red Reflector	2
3	50080370	Decal, Bush Hog Logo	2
4	87340	Decal, Important	1
5	50081836	Decal, Model 4815	2
	50081837	Decal, Model 14815	2
	50076468	Decal, Model 4810	2
	50076469	Decal, Model 14810	2
6	D547	Decal, Danger (540 RPM)	1
7	D549	Decal,Sheet	1
8	91443	Decal, Important	2
9	D552	Decal, Blade Rotation CW	1
10	D551	Decal, Blade Rotation CCW	2
11	D553	Decal, Warning	1
12	D555	Decal, Danger	2
13	D544	Decal, Important	1
14	D565	Decal, Danger	2
15	D546	Decal, Danger	4
16	D614	Decal, Danger (Thrown Object)	6
17	D559	Decal, Gen. Bush Hog Parts	1
18	D587	Decal, Lube	1
19	D548	Decal, Warning (1000 RPM Overlay)	1
20	D813	Decal, Danger - Multilingual	1
21	50065309	Decal, Bush Hog Logo	2
22	50074259	Decal, Made In USA (Not Shown)	3
23	D575	Decal, Danger (Crushing Hazard) (4810RR1 & 14810RR1 Only)	1
24	D1085	Decal,Notice	1

© 2016 Alamo Group Inc.

CENTER DECK ASSEMBLY
4815RR1 & 4810RR1 (540 RPM Models)
14815RR1 & 14810RR1 (1000 RPM Models)

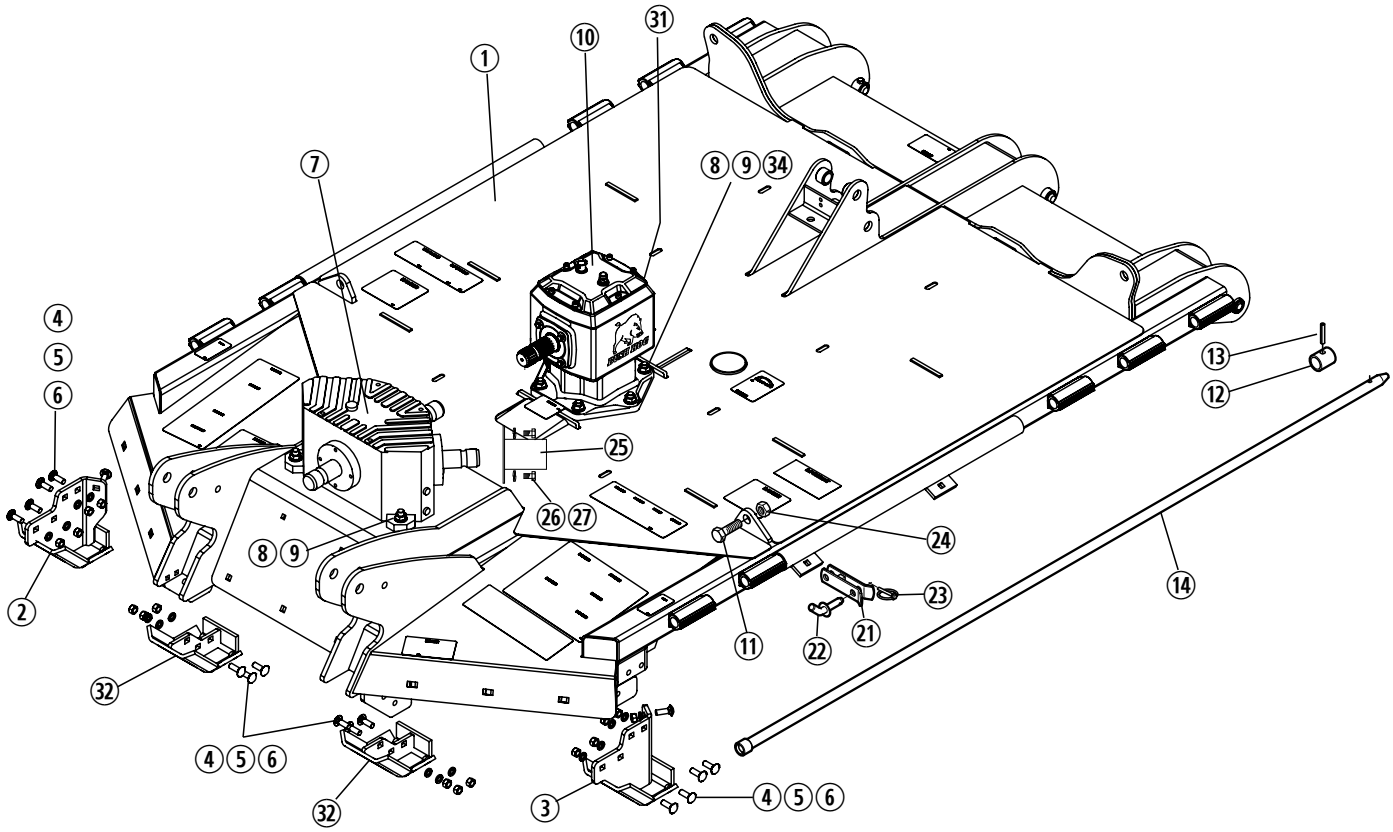

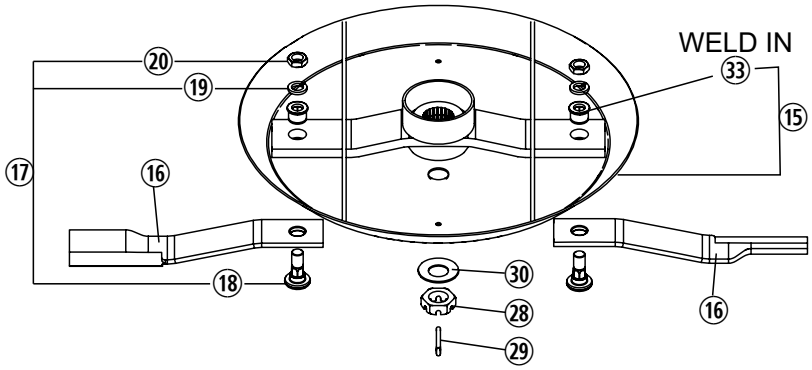

Blade Pan - Serial Numbers with Sixth Thru Eleventh Characters That Are Greater Than 121091.

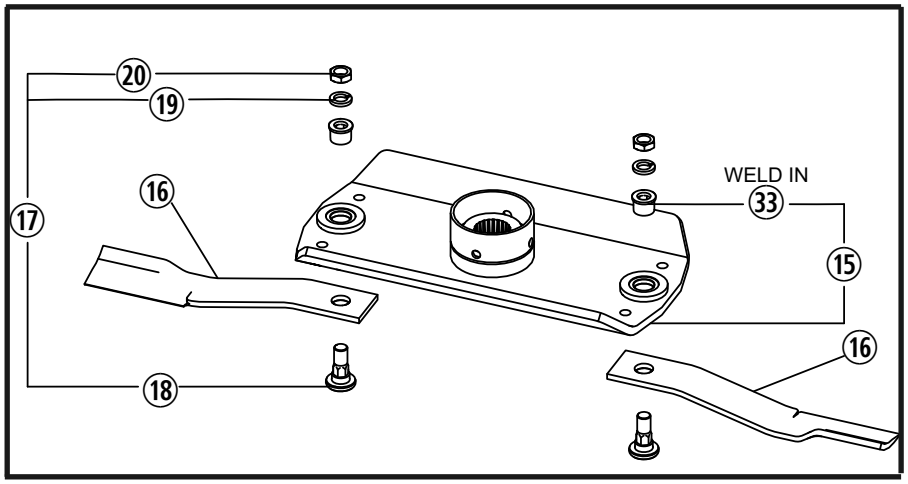

© 2016 Alamo Group Inc.

CENTER DECK ASSEMBLY
4815RR1 & 4810RR1 (540 RPM Models)
14815RR1 & 14810RR1 (1000 RPM Models)

REF. NO.	PART NO.	DESCRIPTION	QTY.	NOTES
1	50076476	Center Deck w/Rings & Decals	1	
2	50076524	Skid R.H. (Outer)	1	
3	50076525	Skid L.H. (Outer)	1	
4	5161614	Carriage Bolt, 1/2” x 1-1/2” Gr. 5	16	
5	15806	Lockwasher, 1/2”	16	
6	8151600	Hex Nut, 1/2”	16	
7	71202	Transfer Gearbox (540 - Comer)	1	
	50071276	Transfer Gearbox (1000 - B&P)	1	
	50072724	Transfer Gearbox (1000 - Comer)	1	
8	50020970	Capscrew, 5/8” x 2-1/4” Gr. 5	4	
9	20414	Locknut, 5/8” Flanged	10	
10	50071561BH	Gearbox (540 RPM)	1	
	50071563BH	Gearbox (1000 RPM)	1	
11	1162424	Capscrew 3/4” x 2-1/2” Gr. 5	2	
12	91900BH	Lock Collar	2	
13	19529	Roll Pin, 3/8” x 1-1/2”	2	
14	50069410	Hinge Rod	2	
15	50076763	Pan, Blade	1	
	50082270	Pan, Blade	1	
		(Serial Numbers with 6th Thru 11th Characters That Are Greater than 121091)		
16	50076631	Blade, 22.25” Parallel Uplift CCW	2	
	50080466	5” Blade, 22.25” Corner Uplift, CCW	2	
17	50076475	Blade Bolt Kit	2	
18	50076705	Blade Bolt	2	
19	20322	Lockwasher, 1-1/8”	2	
20	252BH	Jamb Nut, 1-1/8”	2	
21	50028476	Wing Latch	2	
22	50076342	Pin	2	
23	69391	Lynch Pin	2	
24	20638	Locknut, 3/4”	2	
25	50028363	Shaft Cover (4810, 14810)	1	
26	44315BH	Capscrew, M8 x 1.25 x 25	2	
27	44311BH	Lockwasher, M8	2	
28	50071363	Caster Nut, 2”-12 (Blade Pan)	1	
29	50071364	Cotter Pin, M10 x 100	1	
30	50071362	Washer, Spring 2”	1	
31	50074090	Sight Window, Gearbox 90MM	1	
32	50076771	Center Skid Weldments	2	
33	50076706	Blade Bolt Bushing (Weld In)	2	
34	44262BH	Hex Head Capscrew, 5/8” x 2-1/2” G8 ZP	6	

© 2016 Alamo Group Inc.

WING DECK ASSEMBLIES

4815RR1 & 4810RR1 (540 RPM Models)
14815RR1 & 14810RR1 (1000 RPM Models

This Parts Illustration applies to RH and LH Wings.

RH WING SHOWN

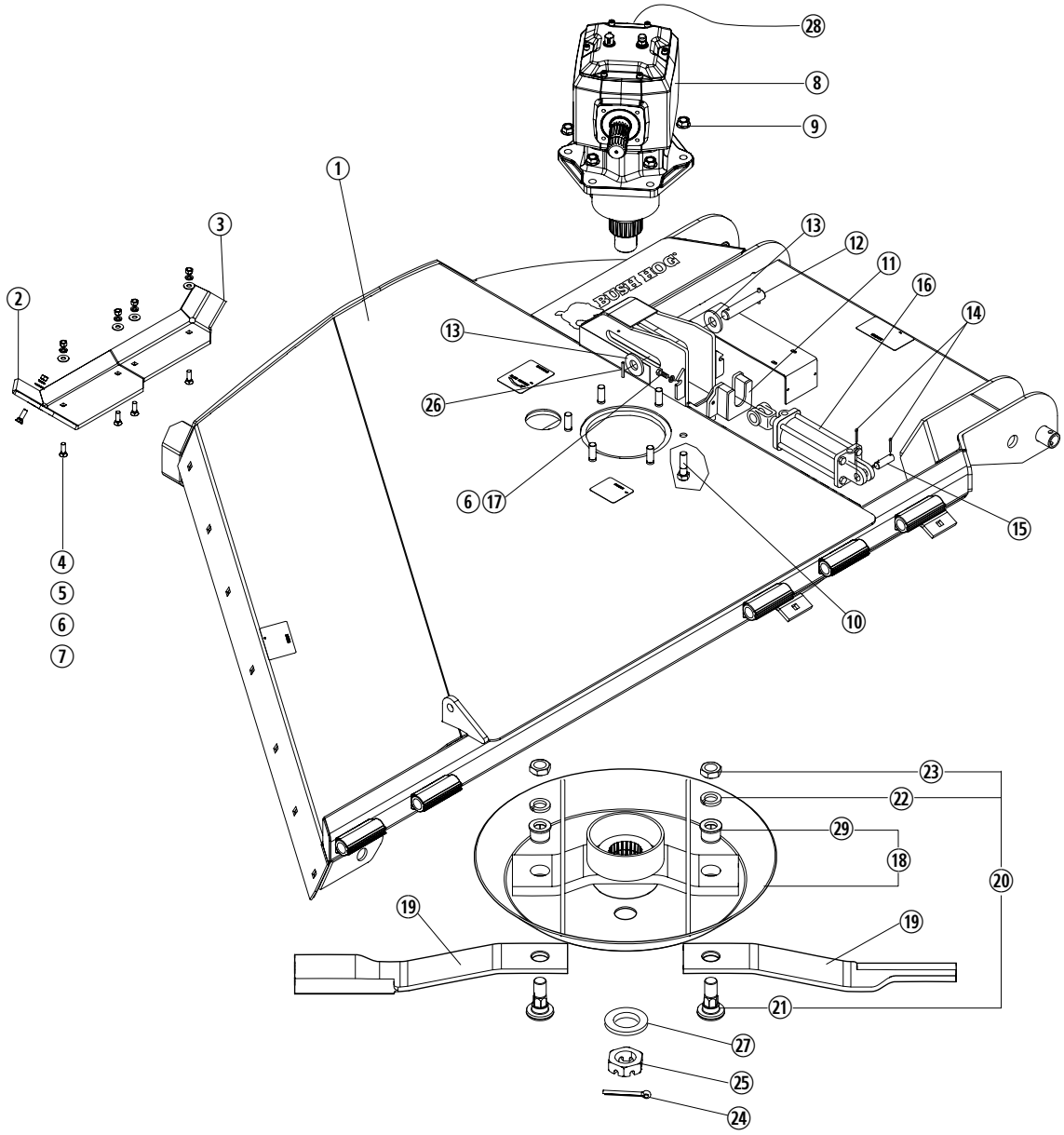

Blade Pan - Serial Numbers with Sixth Thru Eleventh Characters That Are Greater Than 121091.

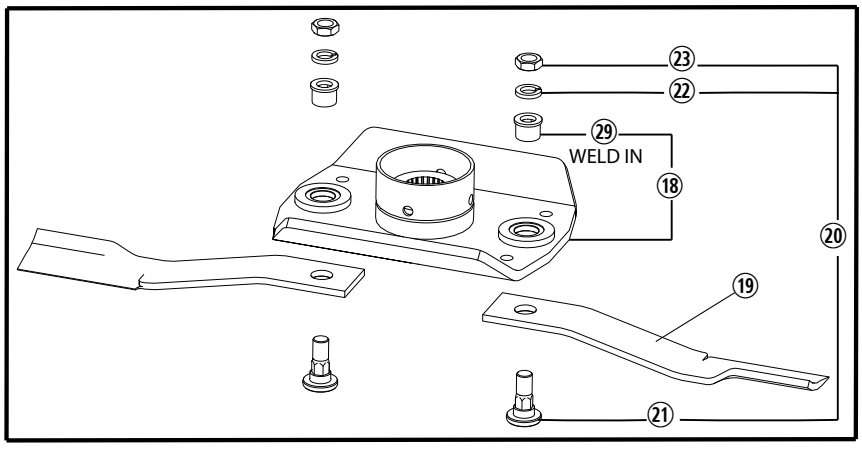

© 2016 Alamo Group Inc.

WING DECK ASSEMBLIES

4815RR1 & 4810RR1 (540 RPM Models)
14815RR1 & 14810RR1 (1000 RPM Models

This Parts Listing applies to RH and LH Wings.

REF. NO.	PART NO.	DESCRIPTION	QTY.	NOTES
1	50076478	R.H. Wing Frame w/Rings & Decals	1	
	50076477	L.H. Wing Frame w/Rings & Decals	1	
2	50069372	Front Skid R.H.	1	
	50069374	Front Skid L.H.	1	
3	50069369	Rear Skid R.H.	1	
	50069371	Rear Skid L.H.	1	
4	3161212	Plow Bolt, 3/8” x 1-1/4”	5	
5	15915BH	Flatwasher, 3/8”	5	
6	15812	Lockwasher, 3/8”	6	
7	8151200	Hex Nut, 3/8”	5	
8	50071562BH	Gearbox R.H. 540 RPM	1	
	50071561BH	Gearbox L.H. 540 RPM	1	
	50071565BH	Gearbox R.H. 1000 RPM	1	
	50071564BH	Gearbox L.H. 1000 RPM	1	
9	20414	Locknut, 5/8” Flanged	6	
10	44262BH	Capscrew, 5/8” x 2-1/2” Gr. 8 ZP	6	
11	50031959	Push Over Assy	1	
12	87293	Cylinder Pin	1	
13	20376	Flatwasher, 1”	2	
14	21020614	Cotter Pin, 3/16” x 1-1/2”	2	
15	95425	Pin	1	
16	99564	Wing Lift Cylinder	1	
	50081895	Wing Lift Cylinder	1	
17	20034	Capscrew, 3/8” x 1”	2	
18	50076767	Pan, Blade	1	
	50082275	Pan, Blade	1	
		(Serial Numbers with 6th Thru 11th Characters That Are Greater than 121091)		
19	50076631	Blade, 22.25” Uplift CCW, R.H. Wing	2	
	50080466	5” Blade, 22.25” Corner Uplift, CCW, R.H. Wing	2	
	50076632	Blade, Uplift CW L.H. Wing	2	
	50083110	5” Blade, 22.25” Corner Uplift, CW, L.H. Wing	2	
20	50076475	Blade Bolt Kit	2	
21	50076705	Blade Bolt	2	
22	20322	Lockwasher, 1-1/8”	2	
23	252BH	Jamb Nut, 1-1/8”	2	
24	50071364	Cotter Pin M10 x 100	1	
25	50071363	Castle Nut, 2” -12 (Blade Pan)	1	
26	20325	Roll Pin, 1/4” x 1-3/4”	1	
27	50071362	Washer, Spring	1	
28	50074090	Sight Window, Gearbox 90MM	1	
29	50076706	Blade Bolt Bushing (Weld In)	2	

© 2016 Alamo Group Inc.

WEIGHT BOX ASSEMBLY (Discontinued)

4810RR1 & 14810RR1 Models

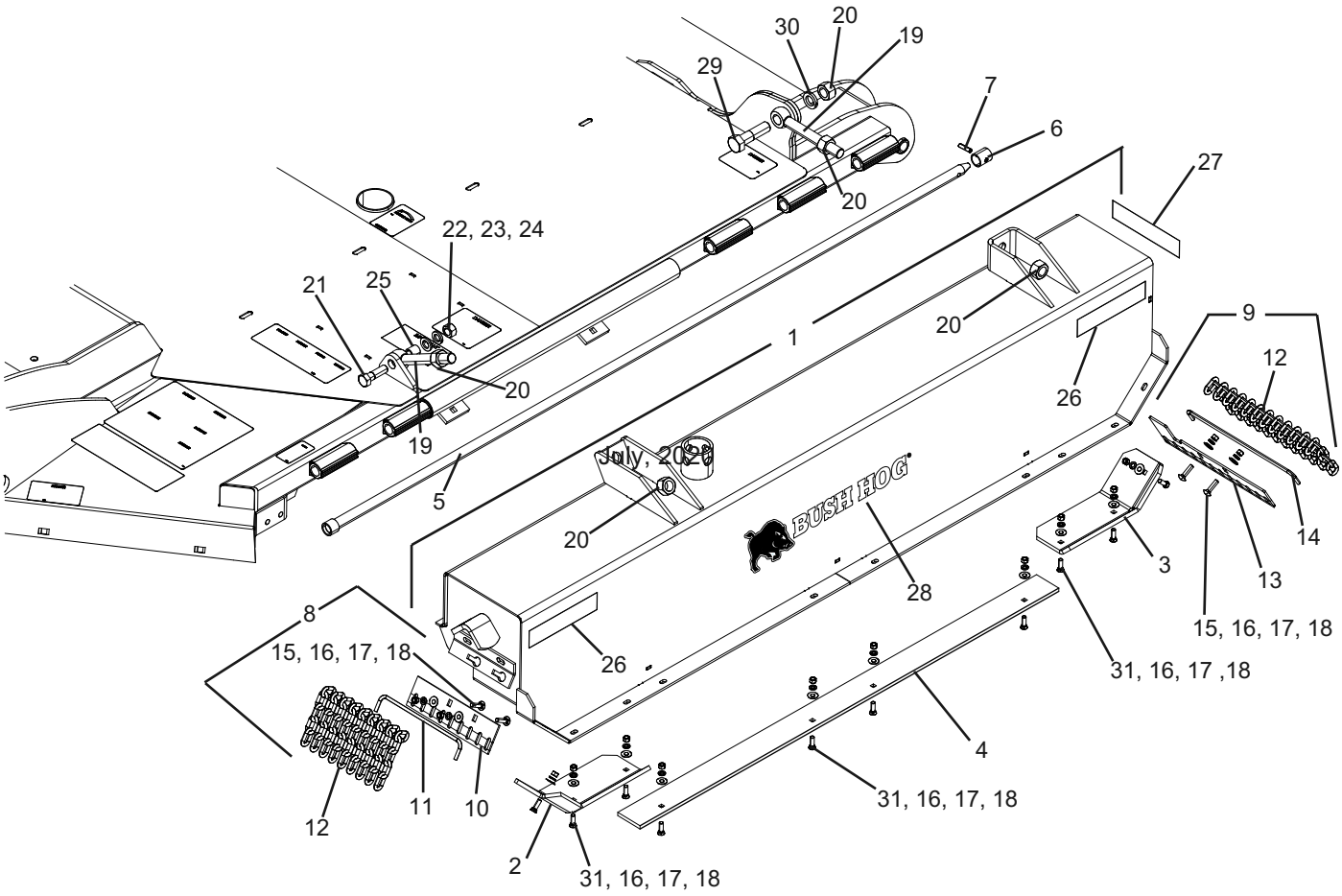

REF. NO.	PART NO.	DESCRIPTION	QTY.	REF. NO.	PART NO.	DESCRIPTION	QTY.
1	50070499	Weight Box Assy	1	15	44286	Carriage Bolt, 3/8” x 1-1/2”	4
2	50069374	Skid, Front L.H.	1	16	15915	Flatwasher, 3/8”	14
3	50069372	Skid, Front R.H.	1	17	15802	Lockwasher, 3/8”	14
4	50070514	Skid	1	18	8151200	Hex Nut, 3/8”	14
5	50069410	Hinge Rod	1	19	87052	Eyebolt	2
6	91900BH	Lock Collar	1	20	19502	Hex Nut, 1”	5
7	19529	Roll Pin, 3/8” x 1-1/2”	1	21	1162424	Capscrew, 3/4” x 2-1/2”	1
8	50070502	Chain Assy, Front (Single)	1	22	20638	Locknut, 3/4”	1
	50070500	Chain Assy, Front (Double)	1	23	146	Lockwasher, 3/4”	1
9	50070503	Chain Assy, Rear (Single)	1	24	119	Flatwasher, 3/4”	1
	50070501	Chain Assy, Rear (Double)	1	25	50038099	Bushing	1
10	50070517	Chain Support (Front)	1	26	50031212	Reflector, Amber	2
11	50069724	Rod, Chain	1	27	50031214	Reflector, Red	1
12	50017264	Chain, 5 Link (Single Row)	21	28	50061049	Decal, Bush Hog	1
	50029803	Chain, 9 Link (Double Row)	21	29	19060	Capscrew, 1” x 3-3/4”	1
13	50070519	Chain Support (Rear)	1	30	15821	Lockwasher, 1”	1
14	50070518	Rod, Chain	1	31	3161212	#3 Hd Plow Bolt, 3/8” x 1-1/4” Gr. 5	10

© 2016 Alamo Group Inc.

SMV SIGN & HOSE HOLDER
FOR 4815RR1 & 4810RR1, 14815RR1 & 14810RR1 MODELS

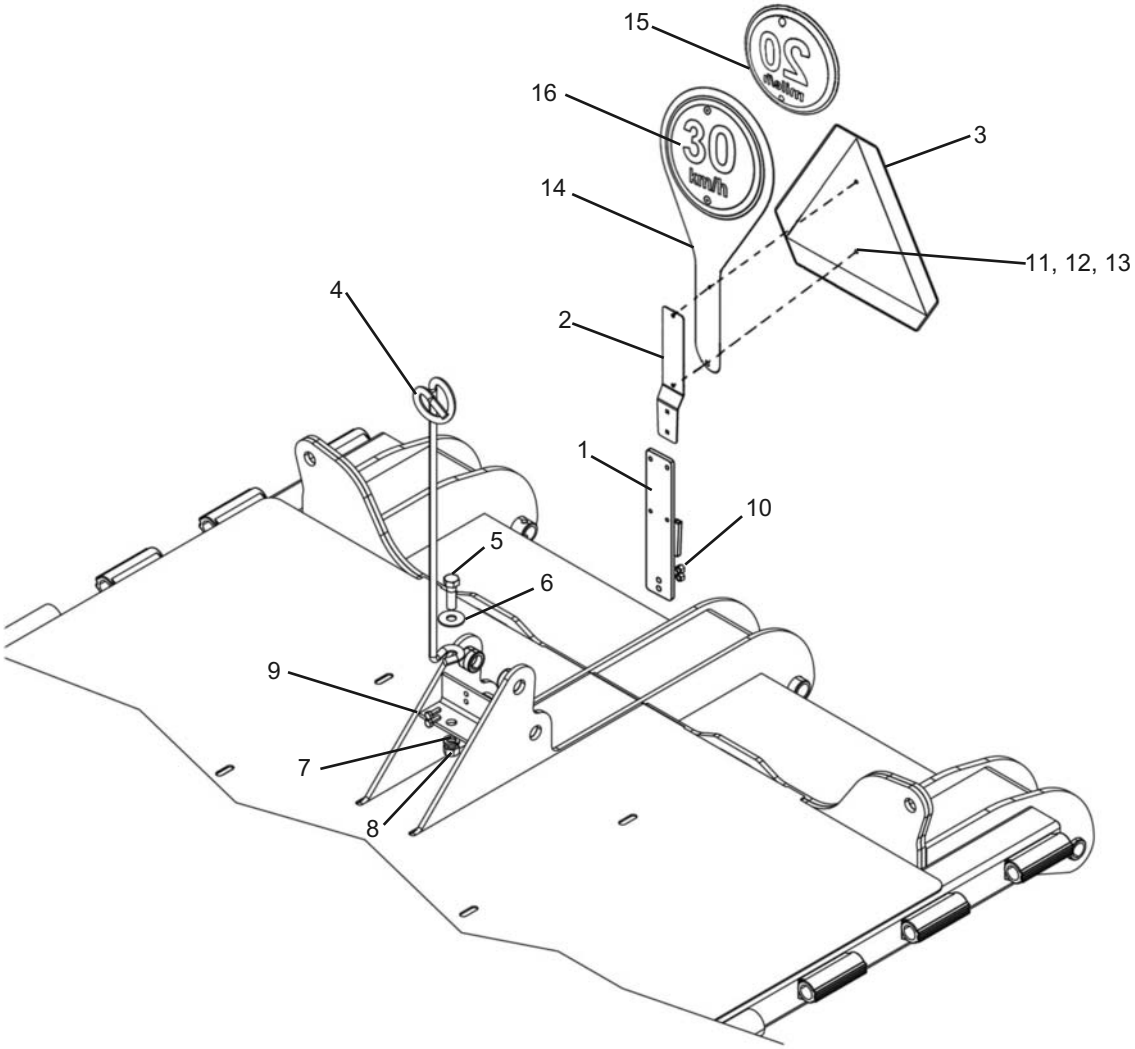

REF. NO.	PART NO.	DESCRIPTION	QTY.
1	50074198	SMV Mount Weldment	1
2	2438621	SMV Spade Bracket	1
3	94359	SMV Sign	1
4	12031	Rod, Hose Holder	1
5	20947	Capscrew, 5/8” x 2” Gr. 5	1
6	15925	Flatwasher, 5/8”	1
7	19486	Lockwasher, 5/8”	1
8	15563	Hex Nut, 5/8”	1
9	1161010	Capscrew, 5/16” x 1” Gr. 5	2
10	15602BH	Locknut, 5/16”	2
11	1160807	Capscrew, 1/4” x 7/8” Gr. 5	2
12	15905	Lockwasher, 1/4”	2
13	15531BH	Hex Nut, 1/4”	2
14	50082008	SIS Plate with Decals	1
15	50082007	Decal, Speed ID (20 mile/h)	1
16	50082010	Decal, Speed ID (30 km/h)	1

© 2016 Alamo Group Inc.

LED LIGHT KIT (REAR LIGHTS ONLY)

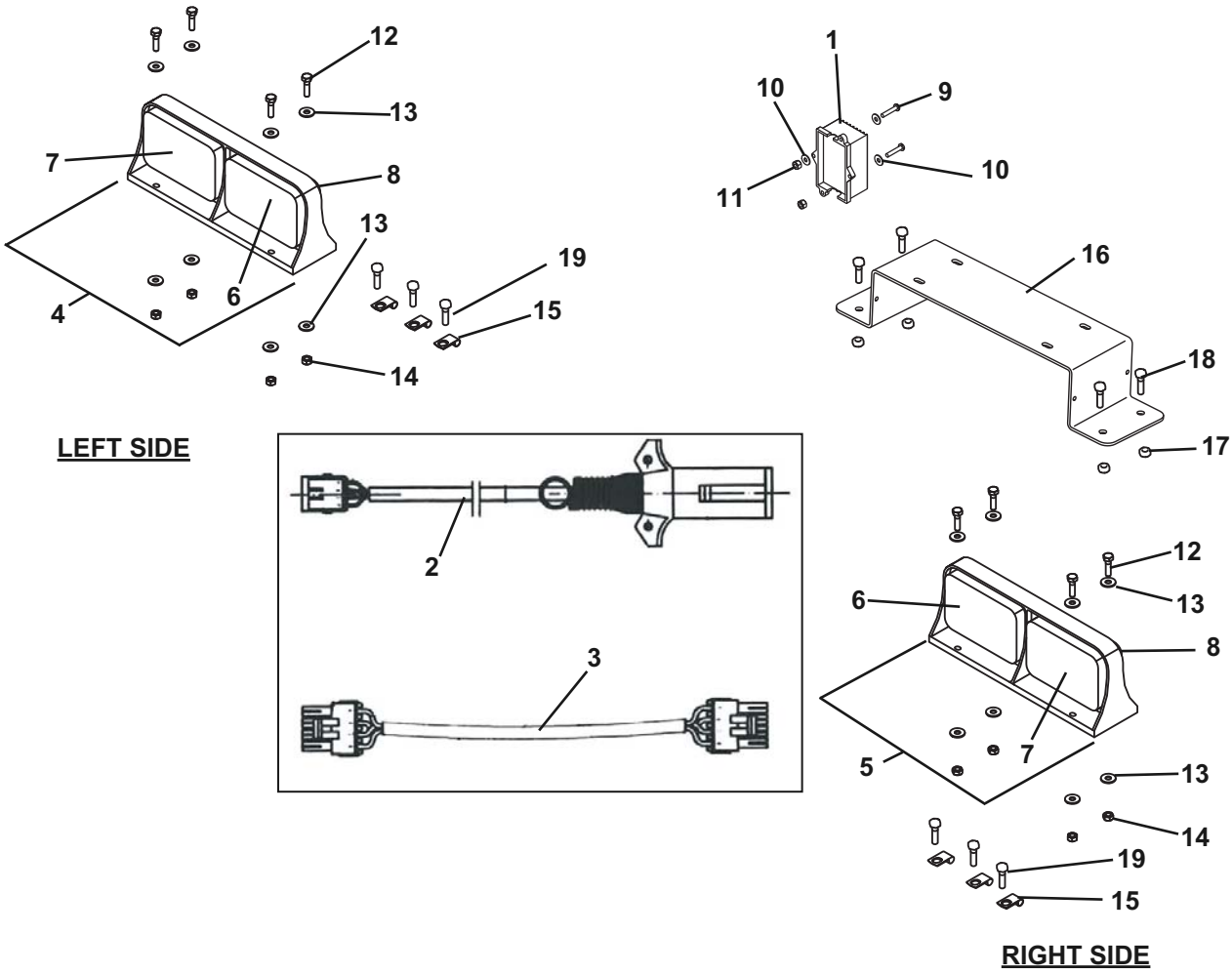

REF. NO.	PART NO.	DESCRIPTION	QTY.
	50074720	**Light Kit (Items 1-8)**	**1**
1	50072057	Module, Enhance	1
2	50074721	Main Harness (7 Pin, 16' Long)	1
3	50074725	Wishbone Harness (8' Long)	2
4	50074723	Dual LED Ag Lamp, Left Side, Amber/Red	1
5	50074724	Dual LED Ag Lamp, Right Side, Red/Amber	1
6	50072062	Lens, Red Replacement	2
7	50072063	Lens, Amber Replacement	2
8	50072064	Cover, Black Replacement Lens	4
	50076324	**Field Light Installation Kit for Early Models (Includes the 50074720 Light Kit)**	**1**
9	4130610	Slt Pn Hd Mach Screw, #10 x 1"	2
10	17020600	Flatwasher, #10	3
11	44520BH	Locknut, #10	2
12	44186BH	Capscrew, 1/4" x 1" Gr. 5	8
13	15918BH	Flatwasher, 1/4"	16
14	15608	Locknut, 1/4" Gr. C	8
15	50074735	Clamp	6
16	50076322	Light Bracket	2
17	44521	Flanged Locknut 5/16"	8
18	1161006	Capcscrew 5/16" x 3/4"	8
19	50043225	Self Tapping Screw Washer Hd. 5/16" x 3/4"	6

© 2016 Alamo Group Inc.

FRONT AND REAR
SINGLE ROW HIGHWAY CHAINS (Discontinued)
4815RR1 & 4810RR1 (540 RPM Models)
14815RR1 & 14810RR1 (1000 RPM Models)

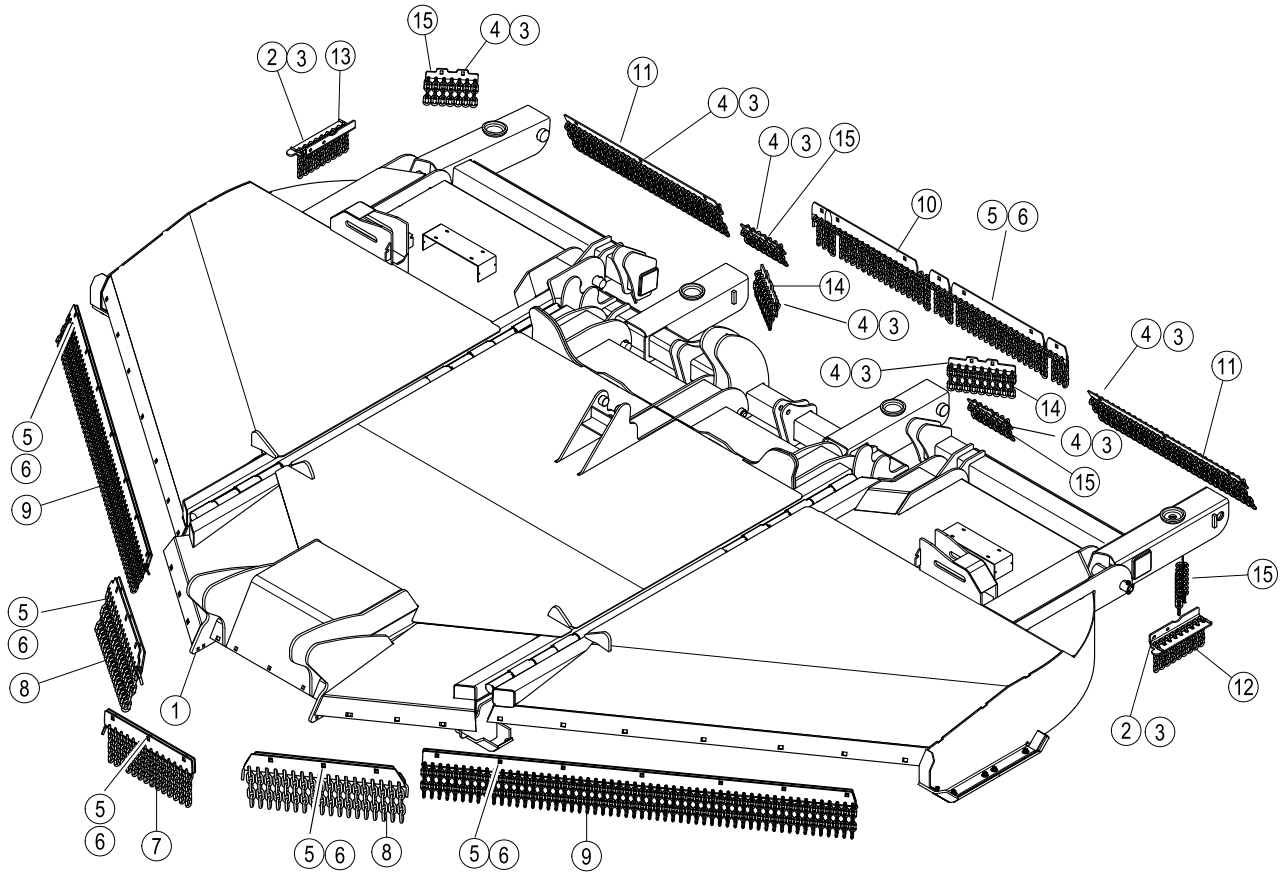

REF. NO.	PART NO.	DESCRIPTION	QTY.
1	44286	Carriage Bolt, 3/8" x 1-1/2" Gr. 5	8
2	45129BH	Capscrew, 3/8" x 1-1/4" Gr. 5	4
3	45073	Hex Nut, 3/8"	26
4	5161212	Carriage Bolt, 3/8" x 1-1/4"	18
5	5161614	Carriage Bolt, 1/2" x 1-1/2"	23
6	19518	Flanged Lock Nut, 1/2"	32
7	**50076486**	**Front Center Chain Assy**	**1**
	50076489	Front Center Chain Support	1
	50076487	Rod, Chain - 14 Slots	1
	50017264	Chain, Plated - 5 Link	14
8	**50076479**	**Front Outside Chain Assy**	**2**
	50076480	Front Outside Chain Support	1
	50076482	Rod, Chain - 18 Slots	1
	50017264	Chain, Plated - 5 Link	18
9	**50071746**	**Front Wing Chain Assy**	**2**
	50071622	Front Support	1
	50069719	Rod, Chain - 56 Slots	1
	50017264	Chain, Plated - 5 Link	56
10	**50069740**	**Rear Center Chain Assy**	**1**
	50069741	Rear Support	2
	50069742	Rear Support	3
	50069743	Chain Rod, Rear Center Deck	1
	50017264	Chain, Plated - 5 Link	41
	50018912	Chain, Plated - 4 Link	4

REF. NO.	PART NO.	DESCRIPTION	QTY.
11	**50069736**	**Rear Wing Chain Assy**	**2**
	50069728	Chain Support, Wing Axle	1
	50069722	Rod, Chain - 28 Slots	1
	50017211	Chain, Plated - 6 Link	28
12	**50069739**	**Chain Assy, L.H. Wing**	**1**
	50069731	Chain Mount, Wing, L.H.	1
	50069724	Rod, Chain - 9 Slots	1
	50018912	Chain, Plated - 4 Link	9
13	**50069738**	**Chain Assy, R.H. Wing**	**1**
	50069730	Chain Mount, Wing R.H.	1
	50069724	Rod, Chain - 9 Slots	1
	50018912	Chain, Plated - 4 Link	9
14	**50071185**	**Chain Assy Wing Axle, Inside**	**2**
	50071184	Chain Support, Wing Axle, Inside	1
	50078346	Chain Cable	1
	50018912	Chain, Plated - 4 Link	9
	50050408	Stop Sleeve	2
15	**50069737**	**Chain Assy Wing Axle**	**4**
	50069729	Chain Support, Wing Axle	1
	50073323	Chain Cable	1
	50018912	Chain, Plated - 4 Link	7
	50050408	Stop Sleeve	2

© 2016 Alamo Group Inc.

FRONT AND REAR
DOUBLE ROW HIGHWAY CHAINS
4815RR1 & 4810RR1 (540 RPM Models)
14815RR1 & 14810RR1 (1000 RPM Models)

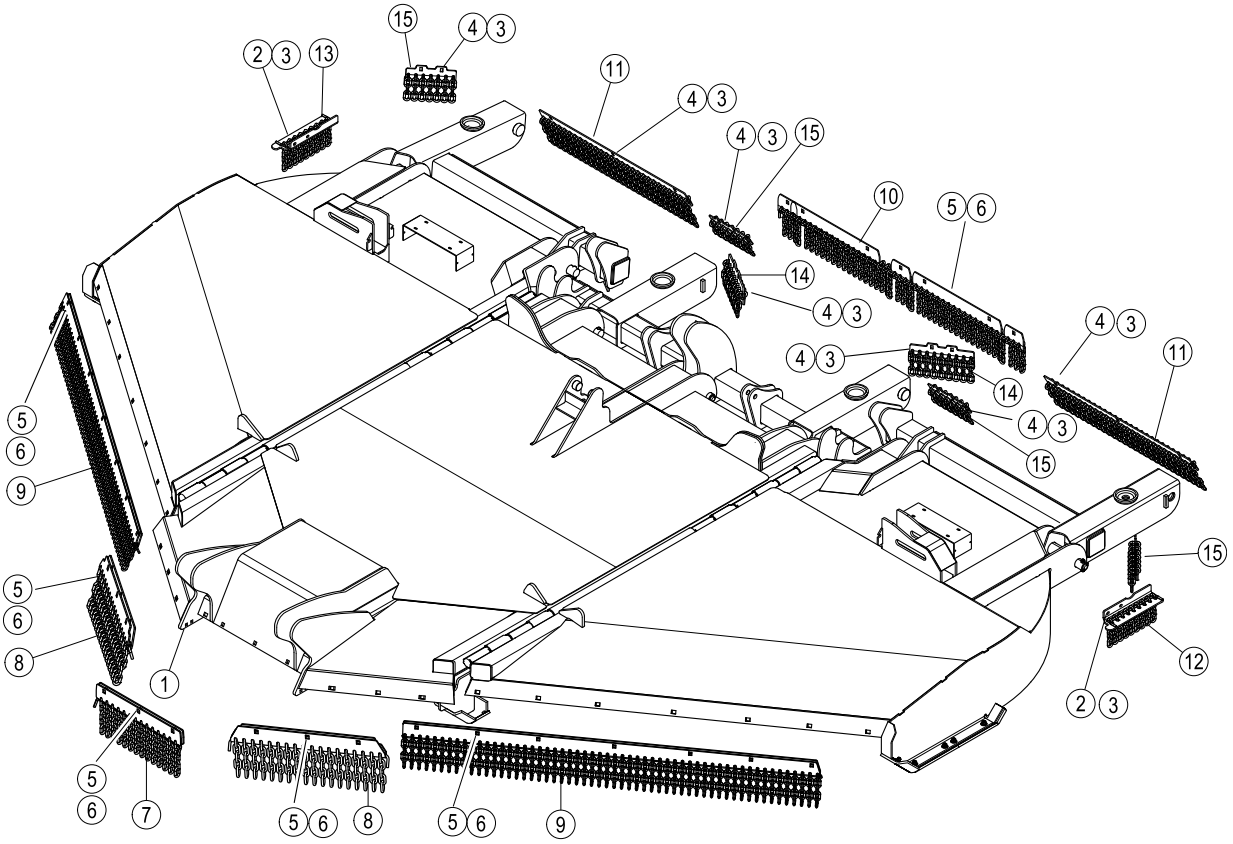

REF. NO.	PART NO.	DESCRIPTION	QTY.
1	44286	Carriage Bolt, 3/8" x 1-1/2" Gr. 5	8
2	45129BH	Capscrew, 3/8" x 1-1/4" Gr. 5	4
3	45073	Hex Nut, 3/8"	26
4	5161212	Carriage Bolt, 3/8" x 1-1/4"	18
5	5161614	Carriage Bolt, 1/2" x 1-1/2"	23
6	19518	Flanged Lock Nut, 1/2"	32
7	**50076485**	**Front Center Chain Assy**	**1**
	50076489	Front Center Chain Support	1
	50076487	Rod, Chain - 14 Slots	1
	50029803	Chain, Plated - 9 Link	14
8	**50076484**	**Front Outside Chain Assy**	**2**
	50076480	Front Outside Chain Support	1
	50076482	Rod, Chain - 18 Slots	1
	50029803	Chain, Plated - 9 Link	18
9	**50071749**	**Front Wing Chain Assy**	**2**
	50071622	Front Support	1
	50069719	Rod, chain - 56 Slots	1
	50029803	Chain, Plated - 9 Link	56
10	**50070270**	**Rear Center Chain Assy**	**1**
	50069741	Rear Support	2
	50069742	Rear Support	3
	50069743	Chain Rod, Rear Center Deck	1
	50029803	Chain, Plated - 9 Link	41
	50017212	Chain, Plated - 7 Link	4

REF. NO.	PART NO.	DESCRIPTION	QTY.
11	**50070271**	**Rear Wing Chain Assy**	**2**
	50069728	Chain Support, Wing Axle	1
	50069722	Rod, Chain - 28 Slots	1
	50017213	Chain, Plated - 11 link	28
12	**50070273**	**Chain Assy, L.H. Wing**	**1**
	50069731	Chain Mount, Wing, L.H.	1
	50069724	Rod, Chain - 9 Slots	1
	50017212	Chain, Plated - 7 Link	9
13	**50070274**	**Chain Assy, R.H. Wing**	**1**
	50069730	Chain Mount, Wing, R.H.	1
	50069724	Rod, Chain - 9 Slots	1
	50017212	Chain, Plated - 7 Link	9
14	**50071187**	**Chain Assy Wing Axle, Inside**	**2**
	50071184	Chain Support, Wing Axle, Inside	1
	50078346	Chain Cable	1
	50029803	Chain, Plated - 9 Link	9
	50050408	Stop Sleeve	2
15	**50070272**	**Chain Assy Wing Axle**	**4**
	50069729	Chain Support, Wing Axle	1
	50073323	Chain Cable	1
	50017212	Chain, Plated - 7 Link	7
	50050408	Stop Sleeve	2

© 2016 Alamo Group Inc.

CENTER SHIELD ASSEMBLY

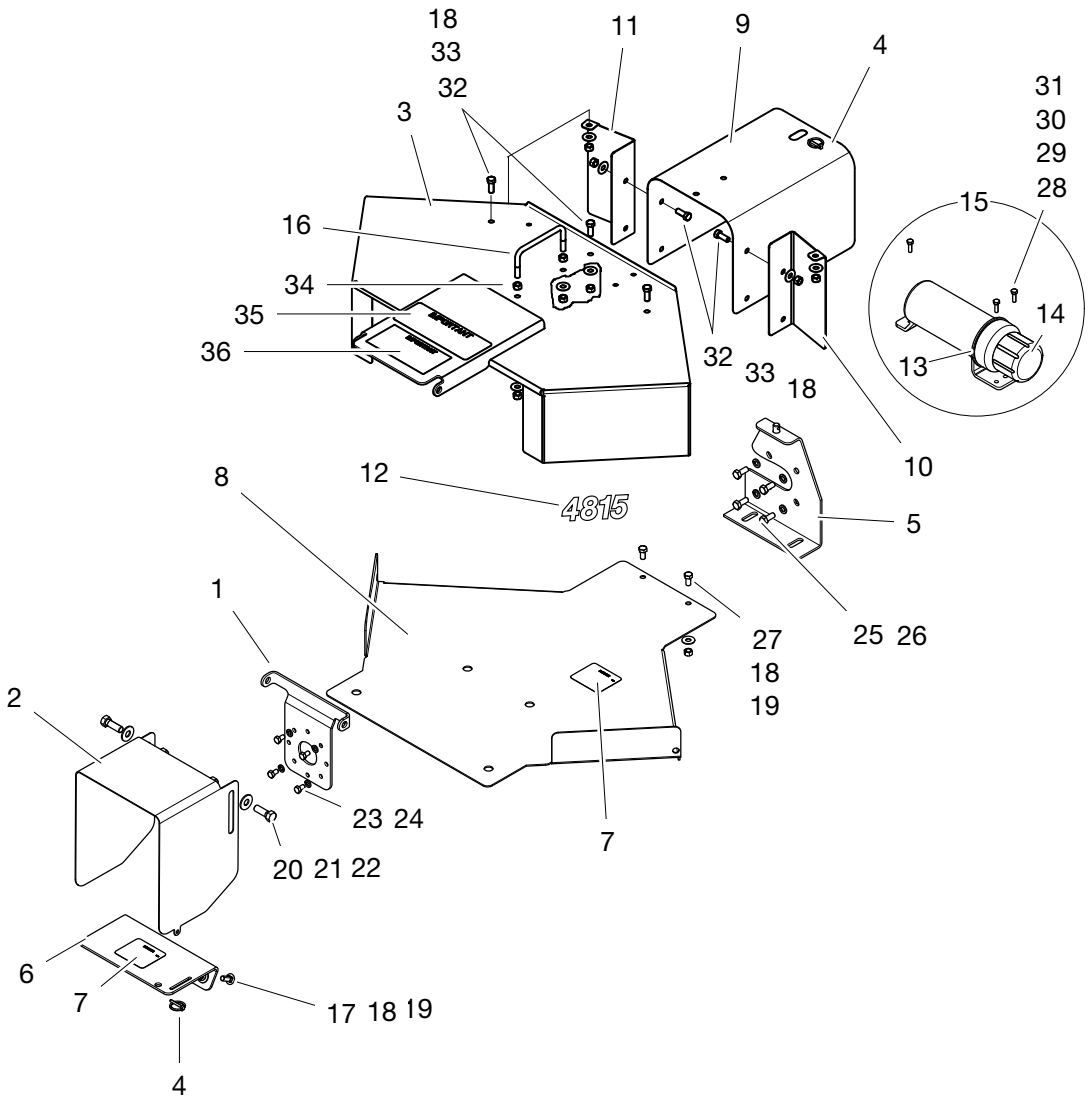

REF. NO.	PART NO.	DESCRIPTION	QTY.
1	50068964	Pivot Bracket	1
2	50069383	Shield, Input	1
3	50069455	Shield w/Decals	1
4	69391	Lynch Pin	2
5	50070528	Rear Shield Support	1
6	50069424	Input Shield Bottom w/Decal	1
7	D546	Decal, Danger	2
8	50069425	Center Shield Bottom w/Decal	1
9	50068977	Shield, Rear	1
10	50070532	Shield, Transfer L.H.	1
11	50070530	Shield, Transfer R.H.	1
12	50081836	Model Decal 4815	2
	50081837	Model Decal 14815	2
	50076468	Model Decal 4810	2
	50076469	Model Decal 14810	2
13	50035830	Seal, Cap	1
14	50035831	Cap, Canister	1
15	50035829	Canister Assembly	1
16	50027637	U-Bolt	1
17	44109BH	Carriage Bolt, 3/8” x 1” Gr.5	2
18	9131200	Locknut, 3/8”	9
19	15915BH	Flatwasher, 3/8”	4
20	15093	Capscrew, 1/2” x 1-1/2”	2
21	15916	Flatwasher, 1/2”	2
22	15554	Locknut, 1/2”	2
23	90560	Capscrew, M8 x 1.25 x 15	4
24	44311BH	Lockwasher, M8	4
25	45244BH	Capscrew, M10 x 1.5 x 25	4
26	45239	Lockwasher, M10	4
27	45088BH	Capscrew, 3/8” x 3/4” Gr.5	2
28	1160807	Capscrew, 1/4” x 7/8”	3
29	15918BH	Flatwasher, 1/4”	3
30	15905	Lockwasher, 1/4”	3
31	15531BH	Hex Nut, 1/4”	3
32	45086BH	Capscrew, 3/8” x 1” Gr.5 YZ	7
33	45063	Flatwasher, 3/8” YZ	9
34	45073	Hex Nut, 3/8” YZ	2
35	87340	Decal, Important Lube	1
36	91443	Decal, Important Slip Clutch	1

© 2016 Alamo Group Inc.

WING DRIVELINE SHIELDING

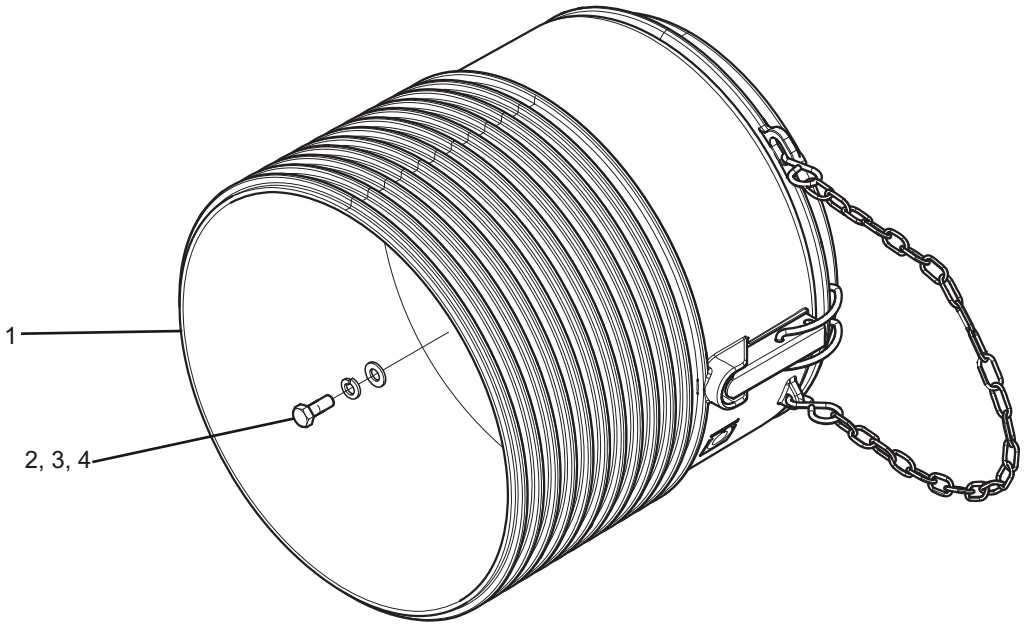

REF. NO.	PART NO.	DESCRIPTION	QTY.
1	50062095	Driveling Shield Cone	1
2	90560	Capscrew, M8 x 1.25 x 15	4
3	44311BH	Lockwasher, M8	4
4	44216	Flatwasher, M8	4

© 2016 Alamo Group Inc.

71202 TRANSFER GEARBOX ASSEMBLY. - *540 RPM*

MFG. BY COMER

MODEL 4815RR1 & 4810RR1 (540 RPM)

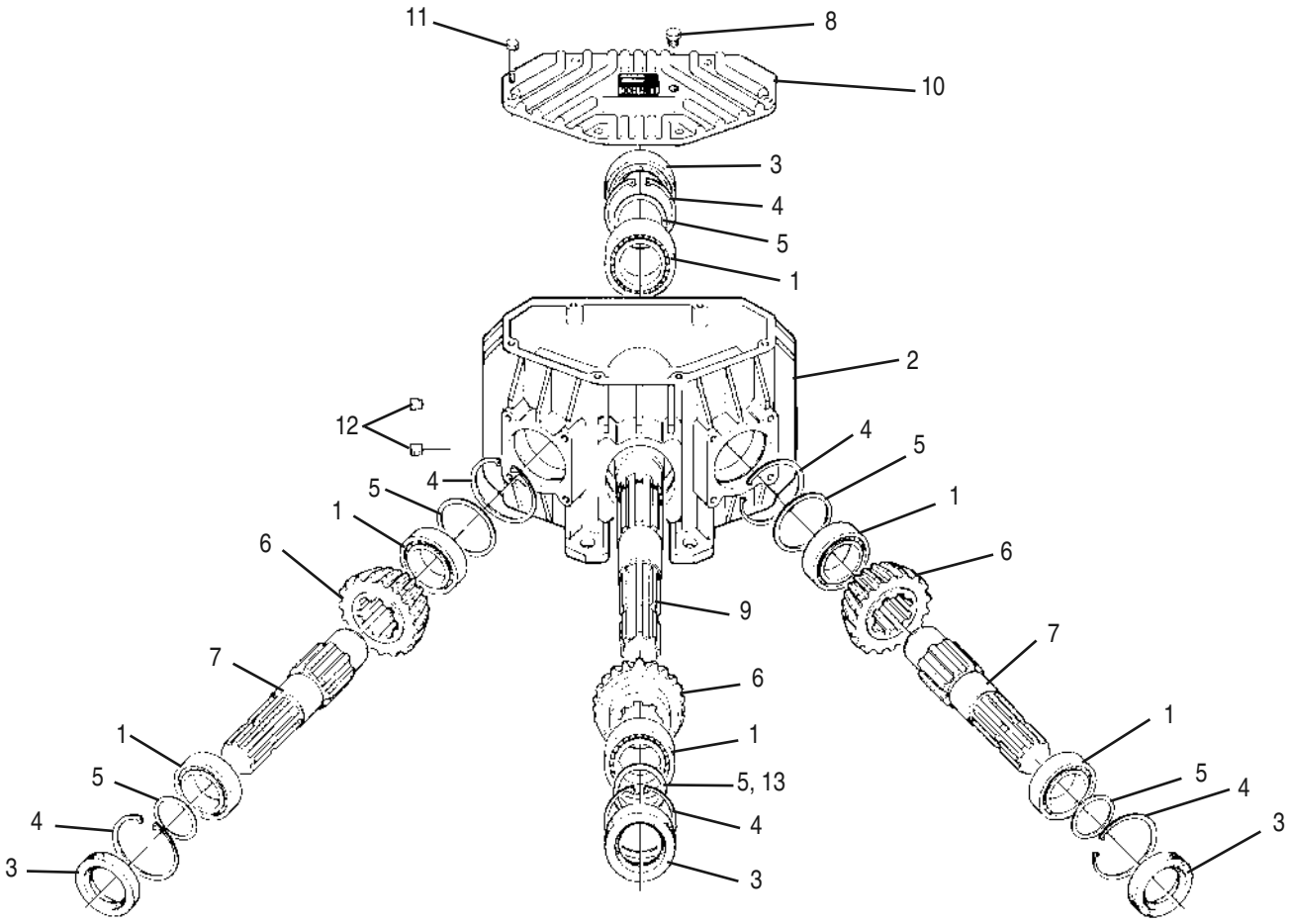

REF. NO.	PART NO.	DESCRIPTION	QTY.
	71202	**Assembly, Transfer Gearbox**	**1**
1	70796	Bearing	6
2	76671	Casing	1
3	50068116	Oil Seal	4
4	70881	Snap Ring	6
5	70752	Shim .3	6
6	50076037	Gear Kit (1 - 24T & 2 - 20T Gears)	1
7	76673	Shaft, 1-3/4” Z20	2
8	80538	Vent Plug	1
9	76675	Shaft, 1-3/4” Z20	1
10	76676	Cover	1
11	44489BH	Capscrew M10 x 1.5 x 35 Gr. 8.8	6
12	70181	Gas Plug, 3/8”	2
13	70753	Shim .4	6
	70754	Shim .5	6
	70755	Shim .6	6

© 2016 Alamo Group Inc.

50072724 TRANSFER GEARBOX ASSEMBLY - *1000 RPM*
MODEL 14815RR1 & 14810RR1 (1000 RPM)
MFG. BY COMER

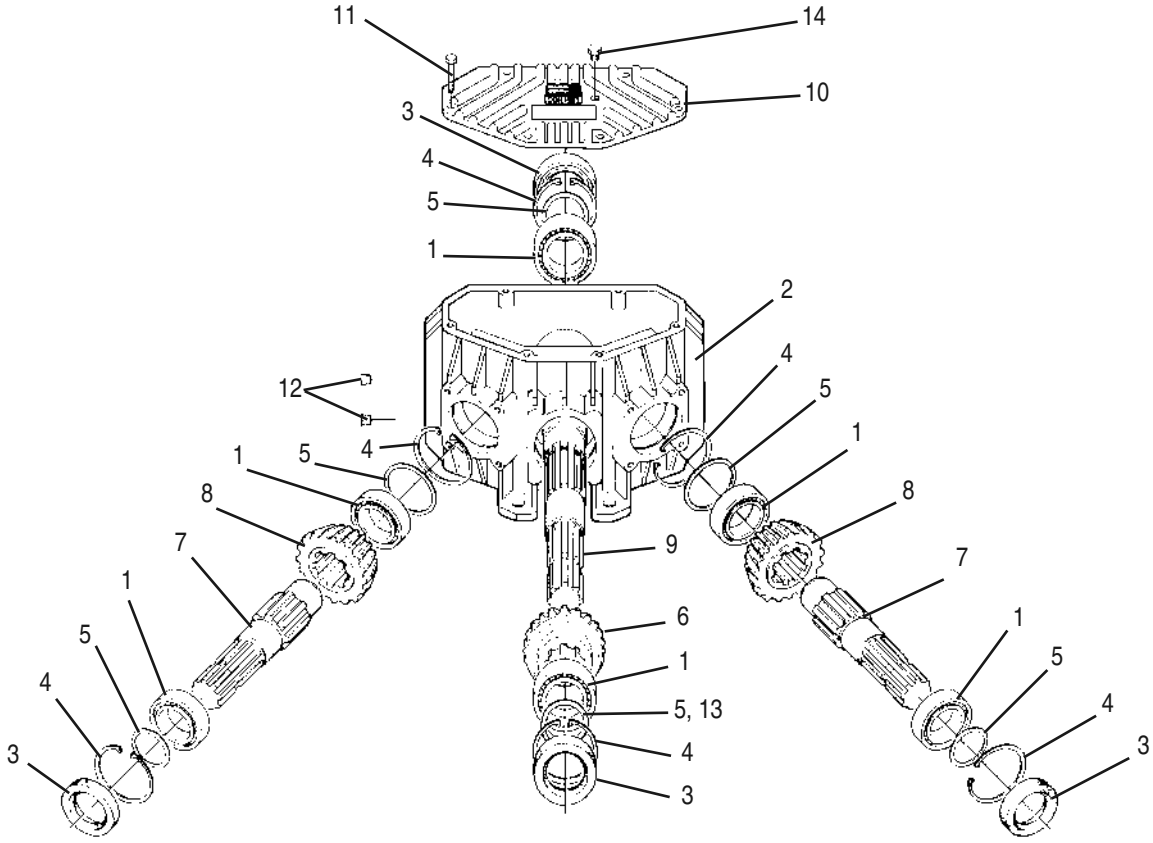

REF. NO.	PART NO.	DESCRIPTION	QTY.
	50072724	**Assembly, Transfer Gearbox**	**1**
1	70796	Bearing	6
2	76671	Casing	1
3	50068116	Oil Seal	4
4	70881	Snap Ring	6
5	70752	Shim .3	6
6	50075082	Gear, Set (1000 RPM)	1
7	76673	Shaft, 1-3/4” Z20	2
8	50075082	Gear, Set (1000 RPM)	2
9	76675	Shaft, 1-3/4” Z20	1
10	76676	Cover	1
11	44489BH	Capscrew M10 x 1.5 x 35 Gr. 8.8	6
12	70181	Gas Plug, 3/8”	2
13	70753	Shim .4	6
	70754	Shim .5	6
	70755	Shim .6	6
14	80538	Vent Plug	1

© 2016 Alamo Group Inc.

50071561BH - GEARBOX ASSY, EZ225B, RATIO 1:1.6, (540 RPM)
CENTER - 4815RR1 & 4810RR1/LH WING - 4815RR1
50071563BH - GEARBOX ASSY, EZ225B, RATIO 1.15:1, (1000 RPM)
CENTER - 14815RR1 & 14810RR1

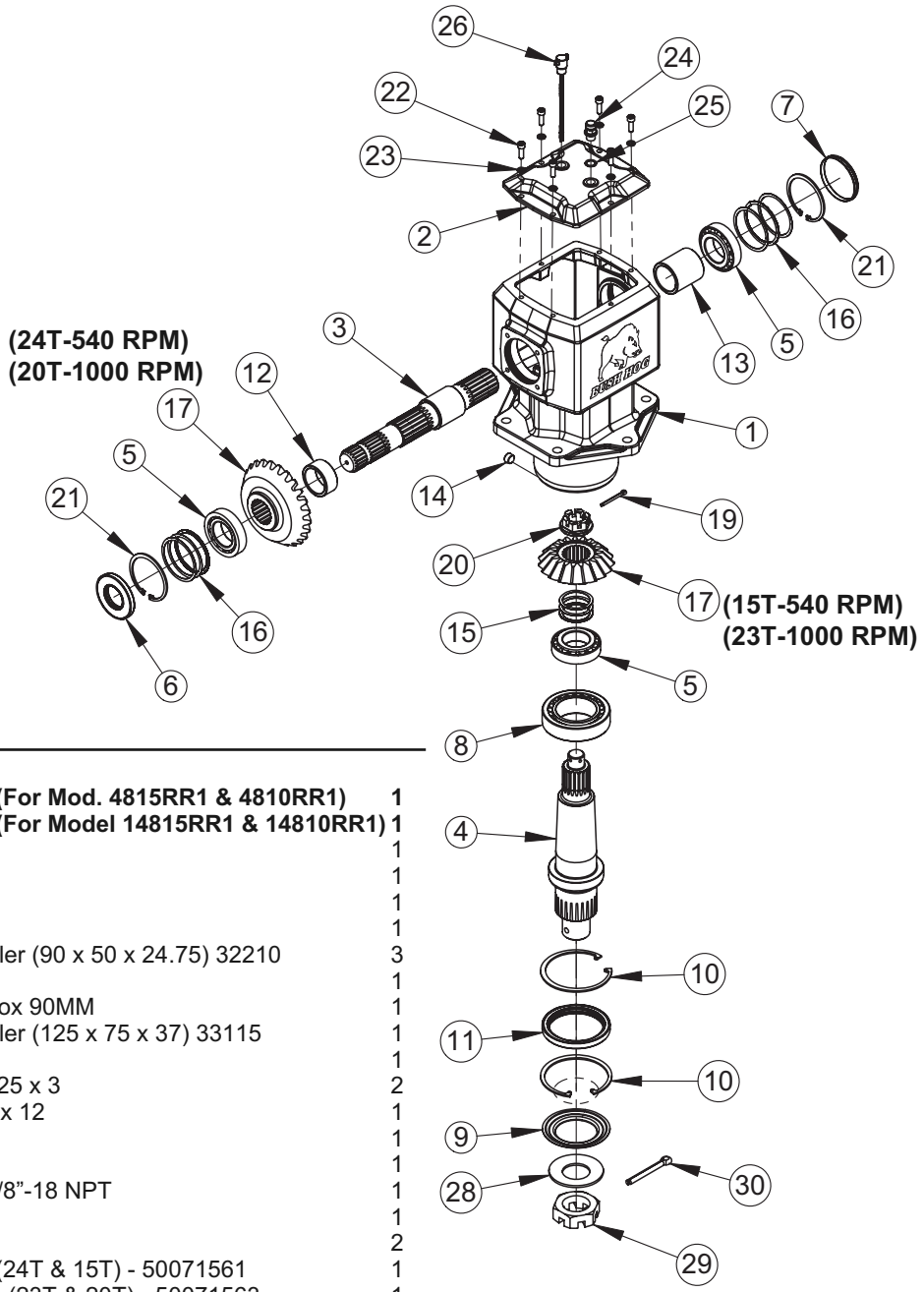

REF. NO.	PART NO.	DESCRIPTION	QTY.
	50071561BH	**Gearbox Assembly (For Mod. 4815RR1 & 4810RR1)**	**1**
	50071563BH	**Gearbox Assembly (For Model 14815RR1 & 14810RR1)**	**1**
1	-------	Housing	1
2	00790887	Cap, Top	1
3	00790924	Shaft, Input	1
4	50069790	Shaft, Output	1
5	00779007	Bearing, Tapered Roller (90 x 50 x 24.75) 32210	3
6	00790889	Seal, Oil 90 x 44 x 10	1
7	50074090	Sight Window, Gearbox 90MM	1
8	00790928	Bearing, Tapered Roller (125 x 75 x 37) 33115	1
9	50069791	Protector, Seal	1
10	00790931	Ring, Internal Snap 125 x 3	2
11	00790930	Seal, Oil 101.6 x 125 x 12	1
12	00790932	Spacer, Small - Input	1
13	00790933	Spacer, Large - Input	1
14	13033	Plug, Socket Head, 3/8”-18 NPT	1
15	00790939	Kit, HD225 Shim	1
16	00790892	Kit, Input Shim	2
17	00790934	Kit, Gear 1:1.6 Ratio (24T & 15T) - 50071561	1
	00790947	Kit, Gear 1.15:1 Ratio (23T & 20T) - 50071563	1
19	70497	Cotter Pin, M5 x 50	1
20	00790937	Hex Nut, Slotted Flg, M30-2.0	1
21	00790891	Ring, Internal Snap, 90 x 3	2
22	00790896	Bolt, Socket Hd, M8 x 1.25 x 20	6
23	701611C	Lockwasher, M8	6
24	00790985	Plug, Vent, M16-1.5	1
25	00790983	Washer, Sealing, M16	1
26	4038612	Dipstick, Oil	1
28	50071362	Washer, Spring 2”	1
29	50071363	Hex Nut, Slotted Jam, 2”-12	1
30	50071364	Cotter Pin, 10MM x 100MM	1

© 2016 Alamo Group Inc.

50071562BH- GEARBOX ASSY, EZ225B, RATIO 1:1.6, (540 RPM)
RH WING - 4815RR1

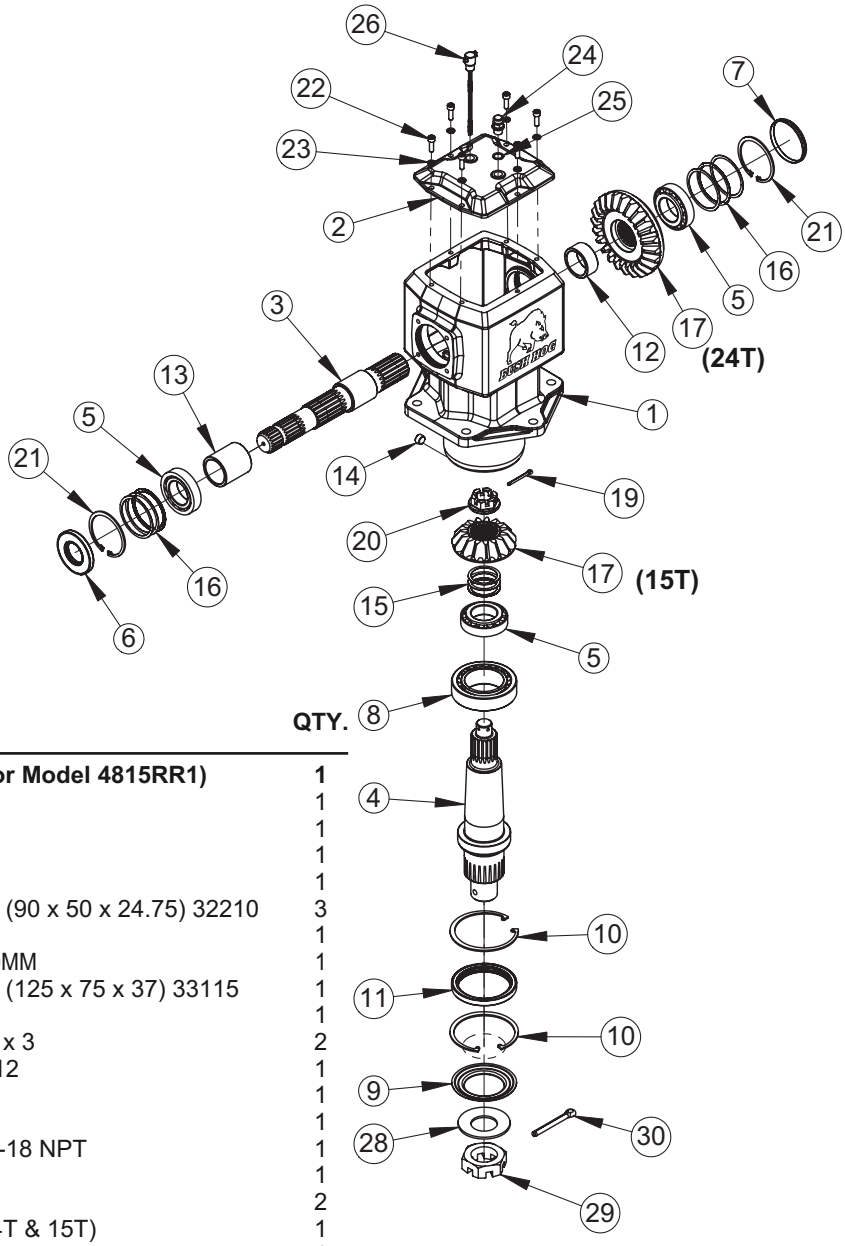

REF. NO.	PART NO.	DESCRIPTION	QTY.
	50071562BH	**Gearbox Assembly (For Model 4815RR1)**	**1**
1	-------	Housing	1
2	00790887	Cap, Top	1
3	00790924	Shaft, Input	1
4	50069790	Shaft, Output	1
5	00779007	Bearing, Tapered Roller (90 x 50 x 24.75) 32210	3
6	00790889	Seal, Oil 90 x 44 x 10	1
7	50074090	Sight Window, Gearbox 90MM	1
8	00790928	Bearing, Tapered Roller (125 x 75 x 37) 33115	1
9	50069791	Protector, Seal	1
10	00790931	Ring, Internal Snap 125 x 3	2
11	00790930	Seal, Oil 101.6 x 125 x 12	1
12	00790932	Spacer, Small - Input	1
13	00790933	Spacer, Large - Input	1
14	13033	Plug, Socket Head, 3/8”-18 NPT	1
15	00790939	Kit, HD225 Shim	1
16	00790892	Kit, Input Shim	2
17	00790934	Kit, Gear 1:1.6 Ratio (24T & 15T)	1
19	70497	Cotter Pin, M5 x 50	1
20	00790937	Hex Nut, Slotted Flg, M30-2.0	1
21	00790891	Ring, Internal Snap, 90 x 3	2
22	00790896	Bolt, Socket Hd, M8 x 1.25 x 20	6
23	701611C	Lockwasher, M8	6
24	00790985	Plug, Vent, M16-1.5	1
25	00790983	Washer, Sealing, M16	1
26	4038612	Dipstick, Oil	1
28	50071362	Washer, Spring 2”	1
29	50071363	Hex Nut, Slotted Jam, 2”-12	1
30	50071364	Cotter Pin, 10MM x 100MM	1

© 2016 Alamo Group Inc.

50071564BH - GEARBOX ASSY, EZ225B, RATIO 1:1.375, (1000 RPM)
LH WING - 14815RR1

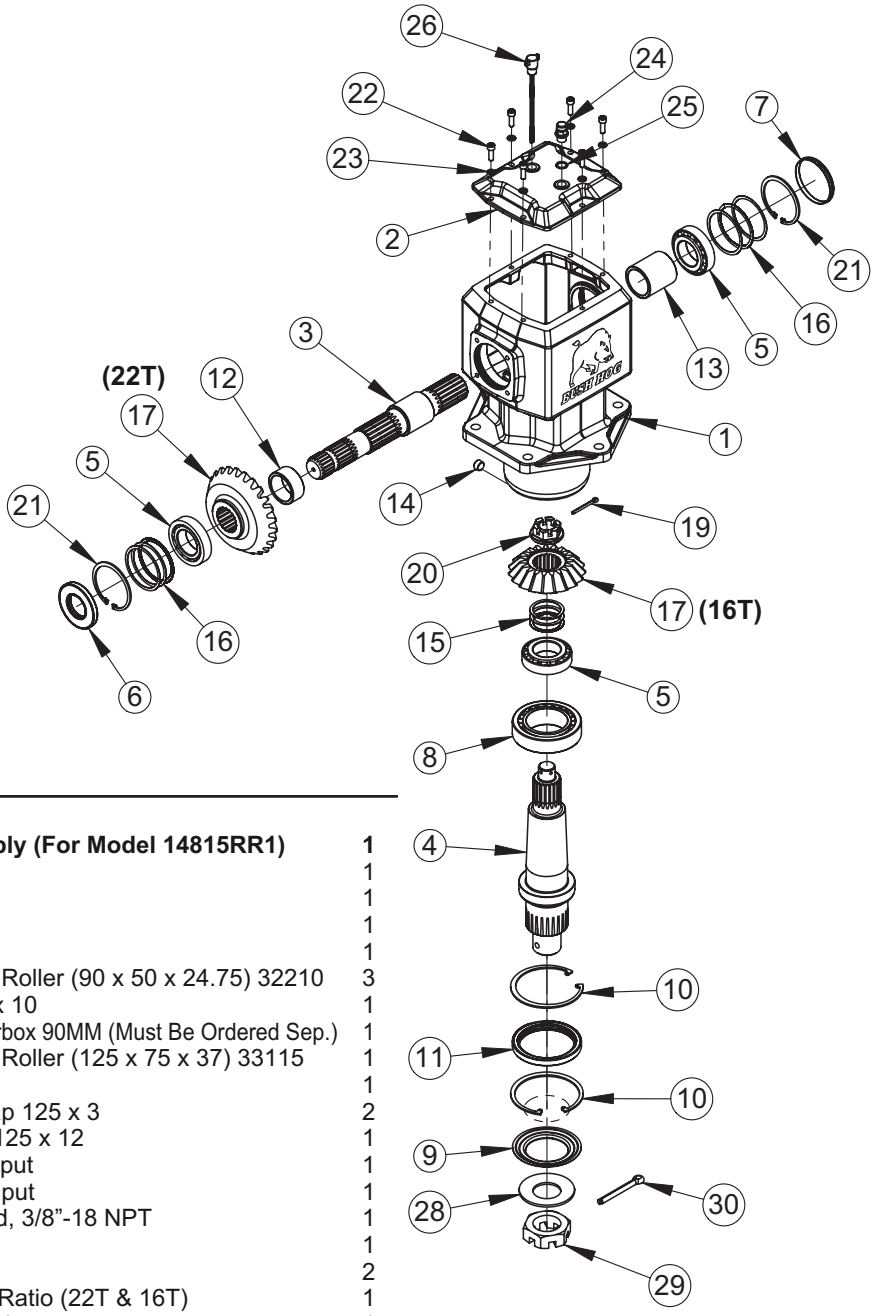

REF. NO.	PART NO.	DESCRIPTION	QTY.
	50071564BH	**Gearbox Assembly (For Model 14815RR1)**	**1**
1	-------	Housing	1
2	00790887	Cap, Top	1
3	00790924	Shaft, Input	1
4	50069790	Shaft, Output	1
5	00779007	Bearing, Tapered Roller (90 x 50 x 24.75) 32210	3
6	00790889	Seal, Oil 90 x 44 x 10	1
7	50074090	Sight Window, Gearbox 90MM (Must Be Ordered Sep.)	1
8	00790928	Bearing, Tapered Roller (125 x 75 x 37) 33115	1
9	50069791	Protector, Seal	1
10	00790931	Ring, Internal Snap 125 x 3	2
11	00790930	Seal, Oil 101.6 x 125 x 12	1
12	00790932	Spacer, Small - Input	1
13	00790933	Spacer, Large - Input	1
14	13033	Plug, Socket Head, 3/8”-18 NPT	1
15	00790939	Kit, HD225 Shim	1
16	00790892	Kit, Input Shim	2
17	00790950	Kit, Gear 1:1.375 Ratio (22T & 16T)	1
19	70497	Cotter Pin, M5 x 50	1
20	00790937	Hex Nut, Slotted Flg, M30-2.0	1
21	00790891	Ring, Internal Snap, 90 x 3	2
22	00790896	Bolt, Socket Hd, M8 x 1.25 x 20	6
23	701611C	Lockwasher, M8	6
24	00790985	Plug, Vent, M16-1.5	1
25	00790983	Washer, Sealing, M16	1
26	4038612	Dipstick, Oil	1
28	50071362	Washer, Spring 2”	1
29	50071363	Hex Nut, Slotted Jam, 2”-12	1
30	50071364	Cotter Pin, 10MM x 100MM	1

© 2016 Alamo Group Inc.

50071565BH - GEARBOX ASSY, EZ225B, RATIO 1:1.375 (1000 RPM)
RH WING - 14815RR1

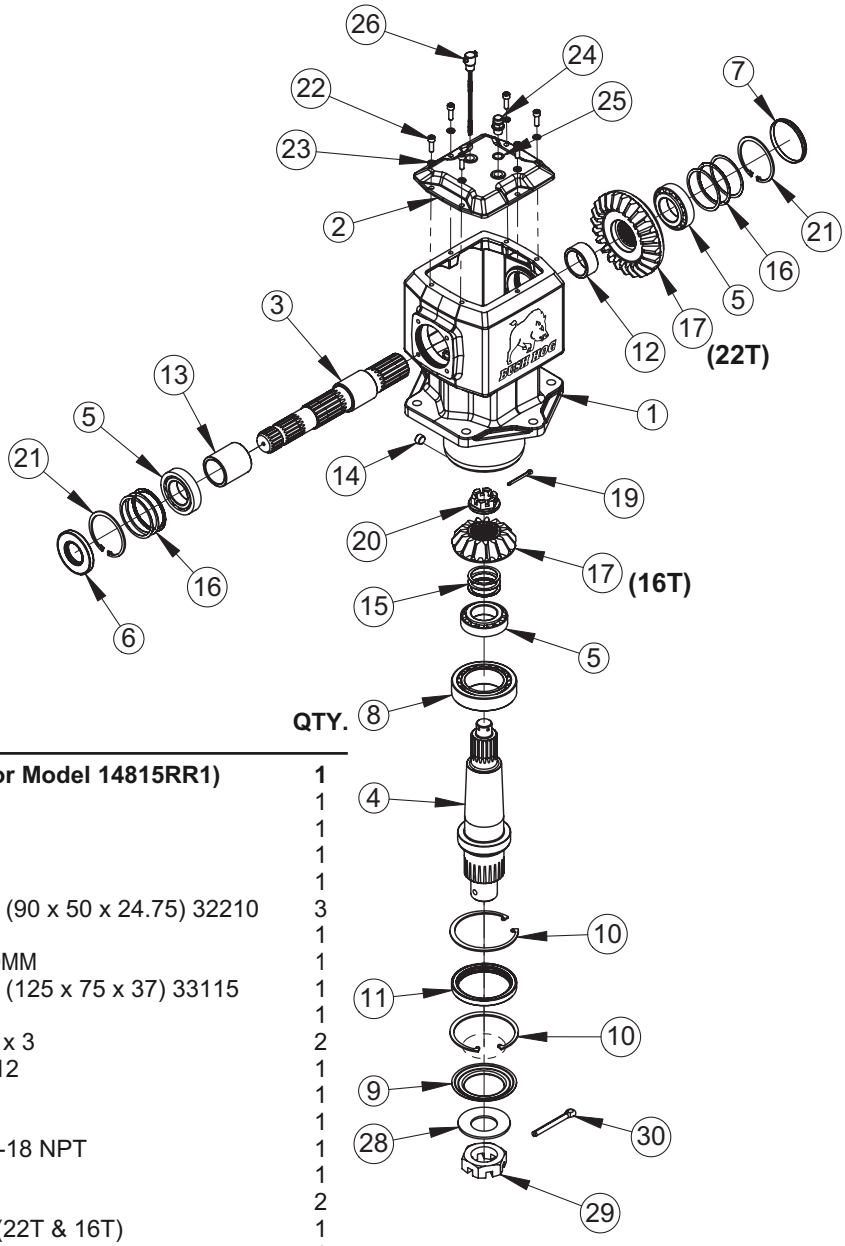

REF. NO.	PART NO.	DESCRIPTION	QTY.
	50071565BH	**Gearbox Assembly (For Model 14815RR1)**	**1**
1	-------	Housing	1
2	00790887	Cap, Top	1
3	00790924	Shaft, Input	1
4	50069790	Shaft, Output	1
5	00779007	Bearing, Tapered Roller (90 x 50 x 24.75) 32210	3
6	00790889	Seal, Oil 90 x 44 x 10	1
7	50074090	Sight Window, Gearbox 90MM	1
8	00790928	Bearing, Tapered Roller (125 x 75 x 37) 33115	1
9	50069791	Protector, Seal	1
10	00790931	Ring, Internal Snap 125 x 3	2
11	00790930	Seal, Oil 101.6 x 125 x 12	1
12	00790932	Spacer, Small - Input	1
13	00790933	Spacer, Large - Input	1
14	13033	Plug, Socket Head, 3/8”-18 NPT	1
15	00790939	Kit, HD225 Shim	1
16	00790892	Kit, Input Shim	2
17	00790950	Kit, Gear 1:1.375 Ratio (22T & 16T)	1
19	70497	Cotter Pin, M5 x 50	1
20	00790937	Hex Nut, Slotted Flg, M30-2.0	1
21	00790891	Ring, Internal Snap, 90 x 3	2
22	00790896	Bolt, Socket Hd, M8 x 1.25 x 20	6
23	701611C	Lockwasher, M8	6
24	00790985	Plug, Vent, M16-1.5	1
25	00790983	Washer, Sealing, M16	1
26	4038612	Dipstick, Oil	1
28	50071362	Washer, Spring 2”	1
29	50071363	Hex Nut, Slotted Jam, 2”-12	1
30	50071364	Cotter Pin, 10MM x 100MM	1

© 2016 Alamo Group Inc.

50071111 DRIVESHAFT ASSEMBLY WITH CLUTCH
Wing Driveshaft – ASAE Size 5
Manufactured by Comer / EG
Used on 4815RR1, 14815RR1 & 4810RR1, 14810RR1

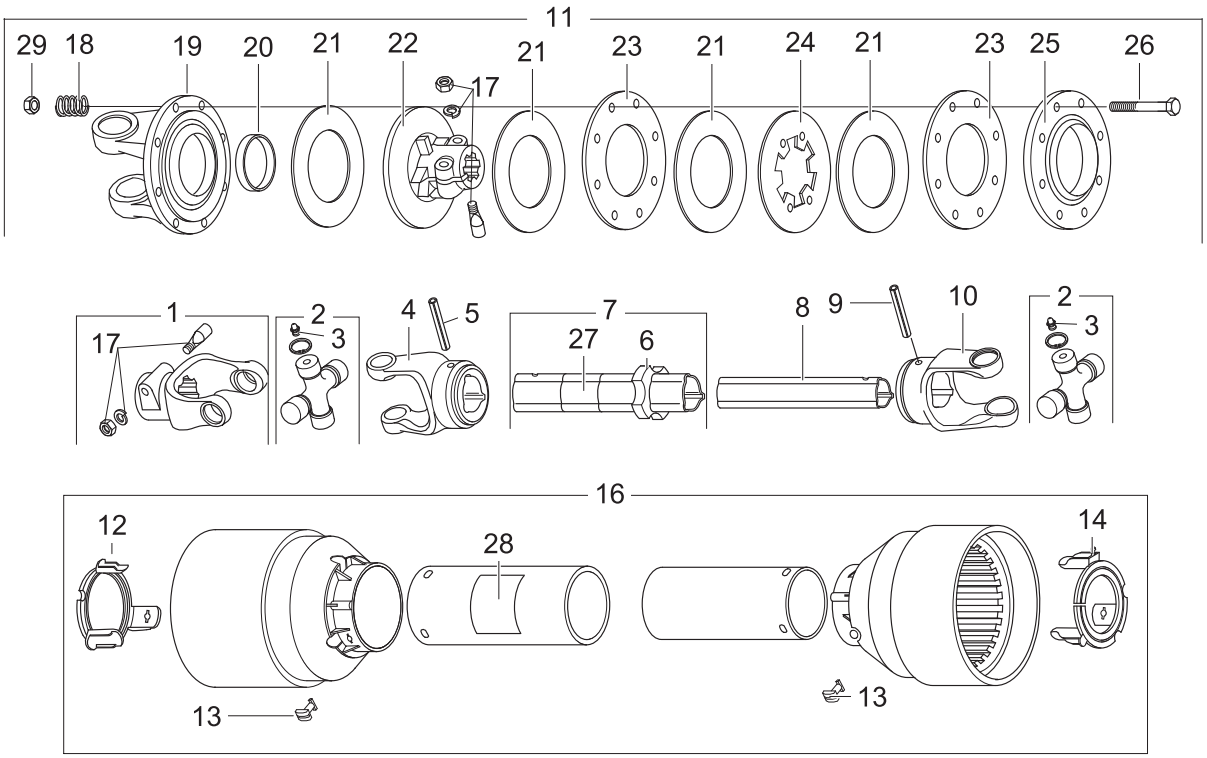

REF. NO.	PART NO.	DESCRIPTION	QTY.
	50071111	**Driveshaft Assembly**	**1**
1	76239BH	Yoke Assembly	1
2	76998	Cross Journal Kit	2
3	76335	Grease Fitting	2
4	78134	Outer Yoke	1
5	67108	Roll Pin Outer Yoke	1
6	76274	Bushing w/ Fitting	1
7	50072385	Outer Tube Assy	1
8	50072386	Inner Tube	1
9	67085	Roll Pin Inner Yoke	1
10	67086	Inner Yoke	1
11	50061008	Clutch Assy	1
12	50056403	Retaing Collar Outer	1
13	50056404	Bolt	6
14	50056405	Retaining Collar Inner	1
16	50072387	Guard Assy. Complete	1
17	76247	Tappered Pin Set	2
18	76080	Spring	8
19	76331	Flanged Yoke	1
20	76082	Bushing	1
21	76083	Lining Ring	4
22	76458	Support	1
23	76085	Inner Plate	2
24	76197	Intermediate Plate	1
25	76086	Pressure Plate	1
26	44159BH	Capscrew M10 x 1.5 x 100	8
27	78786	Danger Decal, Outer Tube	1
28	78608	Danger Decal, Outer Shield	1
29	44154BH	Hex Nut M10 x 1.5 C9	8

© 2016 Alamo Group Inc.

50058536 CENTER DRIVELINE ASSEMBLY
4815RR1, 14815RR1 & 4810RR1, 14810RR1

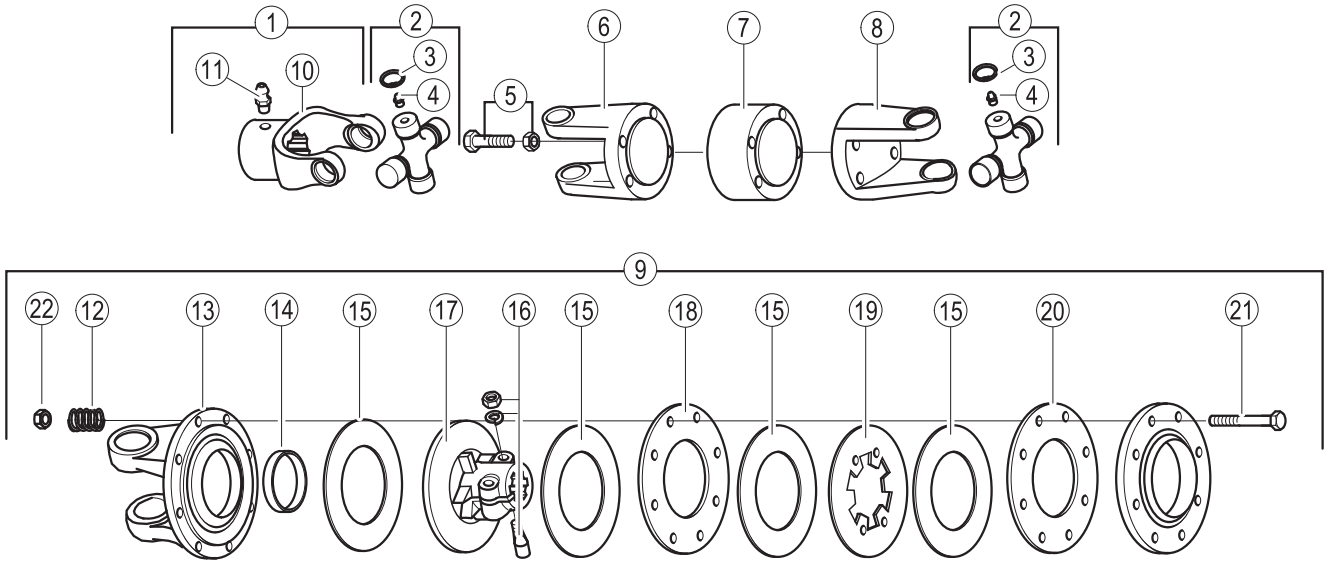

REF. NO.	PART NO.	DESCRIPTION	QTY.
	50058536	**Center Driveline Assy.**	**1**
1	76782	Yoke w/Grease Nipple	1
2	50060543	Cross Bearing Kit	2
3	----------	CirClip	8
4	76335	Grease Fitting	2
5	76965	Capscrew M12 x 1.25 x 90 Gr 12.9 & Locknut M12 x 1.25	4
6	76305	Flanged Yoke, Male	1
7	76306	Retaining Washer	1
8	76307	Flanged Yoke, Female	1
9	76456	Clutch Assembly	1
10	50061005	Yoke	1
11	63946	Grease Nipple	1
12	76080	Spring	8
13	76164	Flanged Yoke	1
14	76082	Bushing	1
15	76083	Lining Ring	4
16	76247	Tapered Pin Kit	1
17	76458	Clutch Support	1
18	76085	Inner Plate	2
19	76197	Intermediate Plate	1
20	76086	Pressure Plate	1
21	44159BH	Capscrew M10 x 1.5 x 100 Gr.8	8
22	44154BH	Locknut M10 x 1.5 C9	8

© 2016 Alamo Group Inc.

50069764SP C.V. Driveshaft
Input : 1-3/8" – 6 Spline, ASAE Size 6
Manufactured by Comer / EG
4815RR1 & 4810RR1 (540 RPM Models)

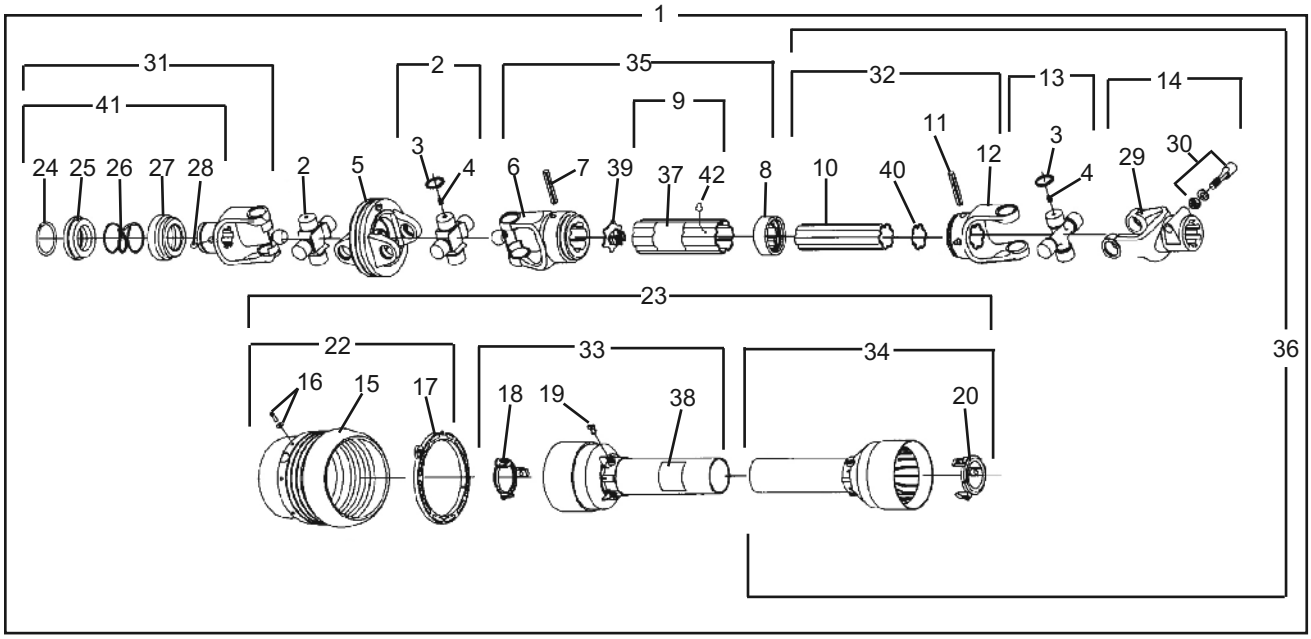

REF. NO.	PART NO.	DESCRIPTION	QTY.
1	**50069764SP**	**Driveshaft Assembly**	**1**
2	50056400	Cross Journal Set	2
3	------	Circlip	12
4	76335	Grease Nipple	3
5	76357	Wide Angle Double Yoke	1
6	76896	Outer Yoke	1
7	67108	Roll Pin - Outer & Inner Tube	1
8	76897	Wiper	1
9	50071242	Complete Outer Tube	1
10	50071243	Inner Tube	1
11	67085	Roll Pin For Inner Tube	1
12	50071244	Inner Yoke	1
13	50056401	Cross Journal Set	1
14	76239BH	Complete Yoke	1
15	------	Guard Cone	1
16	76362	Screw Kit	6
17	50056402	Bearing Ring	1
18	50056403	Guard Ret. Collar - Outer Tube	1
19	50056404	Bolt	6
20	50056405	Guard Ret. Collar - Inner Tube	1
22	50056406	Guard Cone Set	1
23	50071245	Complete Guard w/Inst. Manual	1
24	------	Outer Circlip	1
25	------	Sliding Sleeve Collar	1
26	------	Spring	1
27	------	Fixed Sleeve	1
28	------	Ball, 1/2"	3
29	------	Yoke (See Item 14)	1
30	76247	Tapered Pin Set 1-3/4"	1
31	50017504	Yoke Assy. 1-3/8 - 6 Spline	1
32	------	Male Tube w/Yoke	1
33	------	Half Female Guarding w/Label	1
34	------	Half Male Guarding (See Item 23)	1
35	------	Female Shaft (See Item 1)	1
36	50071246	Half Male Shaft w/Guarding	1
37	78786	Decal, Danger - Outer Tube	1
38	78608	Decal, Danger - Outer Guard Tube	1
39	76899	Plastic Cap - Outer Tube	1
40	50071247	Plastic Cap - Inner Tube	1
41	50017480	Kit Collar For Yoke 1-3/8"	1
42	50075570	Grease Fitting	1

© 2016 Alamo Group Inc.

50069765SP C.V. Driveshaft
Input : 1-3/8" – 21 Spline, ASAE Size 5
Manufactured by Comer / EG
14815RR1 & 14810RR1 (1000 RPM Models)

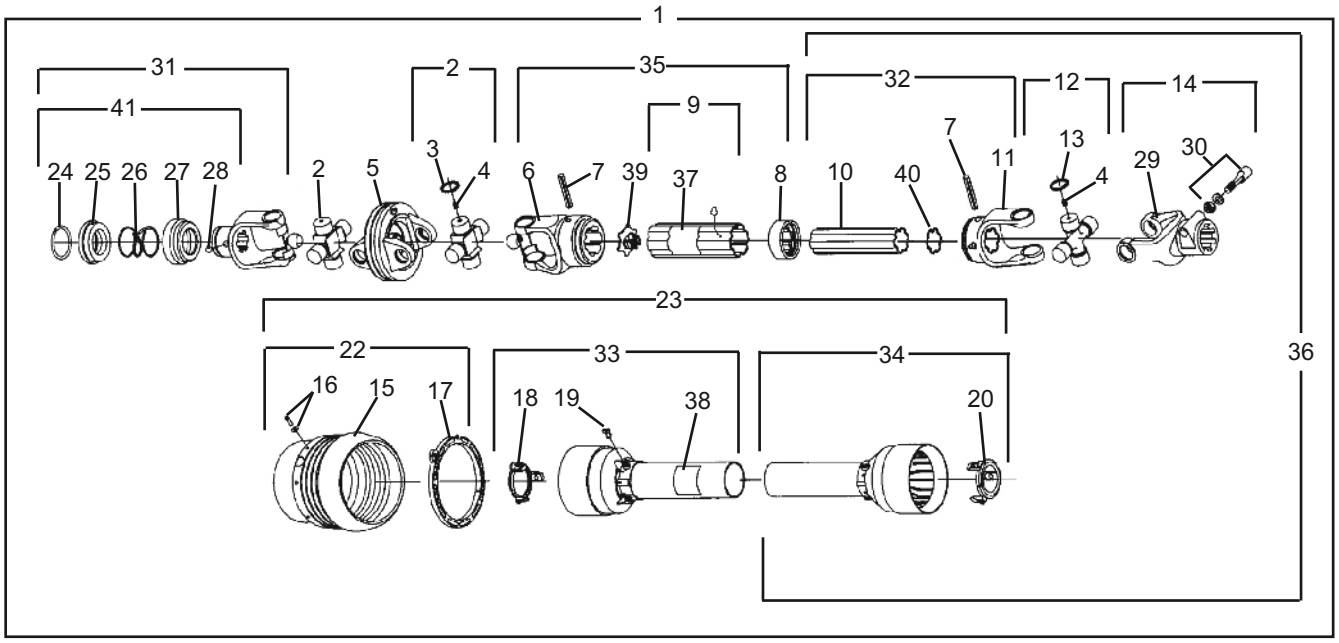

REF. NO.	PART NO.	DESCRIPTION	QTY.
1	**50069765SP**	**Driveshaft Assembly**	**1**
2	50056414	Cross Journal Set	2
3	------	Circlip (See Item 2)	8
4	76335	Grease Nipple	3
5	76421	Wide Angle Double Yoke	1
6	76893	Outer Yoke	1
7	66866	Roll Pin - Outer & Inner Tube	2
8	76894	Wiper	1
9	50071248	Complete Outer Tube	1
10	50071249	Inner Tube	1
11	50071250	Inner Yoke	1
12	50056411	Cross Journal Set	1
13	------	Circlip (See Item 12)	4
14	76422	Complete Yoke	1
15	------	Guard Cone (See item 22)	1
16	76362	Screw Kit	6
17	50056416	Bearing Ring	1
18	50056417	Guard Ret. Collar - Outer Tube	1
19	50056404	Bolt	6
20	50056418	Guard Ret. Collar - Inner Tube	1

REF. NO.	PART NO.	DESCRIPTION	QTY.
22	50056419	Guard Cone Set	1
23	50071251	Complete Guard w/Inst. Manual	1
24	------	Outer Circlip (See Item 31 or 41)	1
25	------	Sliding Sleeve Collar (See Item 31 or 41)	1
26	------	Spring (See Item 31 or 41)	1
27	------	Fixed Sleeve (See Item 31 or 41)	1
28	------	Ball, 1/2" (See Item 31 or 41)	3
29	------	Yoke (See Item 14)	1
30	76247	Tapered Pin Set 1-3/4"	1
31	50017482	Yoke Assy 1-3/8" - 21 Spline	1
32	------	Male Tube w/Yoke (See Item 36)	1
33	------	Half Female Guarding (See Item 23)	1
34	------	Half Male Guarding (See Item 23)	1
35	------	Female Shaft (See Item 1)	1
36	50071252	Half Male Shaft w/Guarding	1
37	78786	Decal, Danger - Outer Tube	1
38	78608	Decal, Danger - Outer Guard Tube	1
39	76892	Plastic Cap - Outer Tube	1
40	50071253	Plastic Cap - Inner Tube	1
41	50017480	Kit Collar For Yoke 1-3/8"	1

© 2016 Alamo Group Inc.

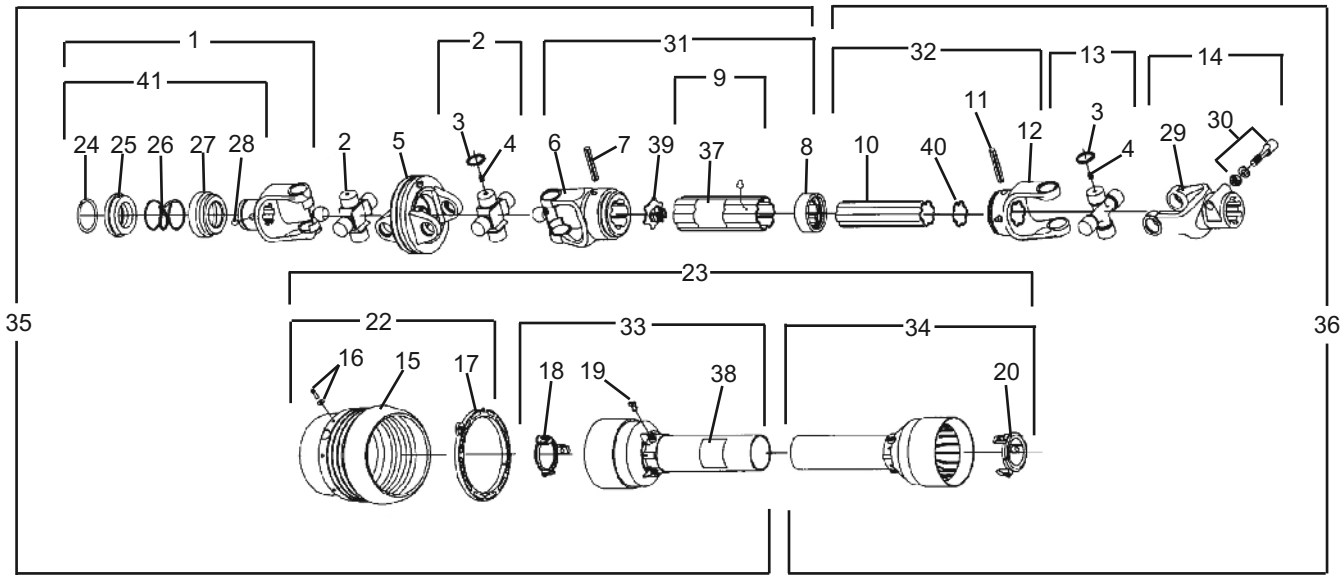

50074699SP C.V. Driveshaft
(REPLACES 50054670SP DRIVESHAFT)
Input : 1-3/4" – 20 Spline, ASAE Size 6
Manufactured by Comer / EG
14815RR1 & 14810RR1 (1000 RPM Models)

REF. NO.	PART NO.	DESCRIPTION	QTY.
	50074699SP	**Assembly, Driveline**	**1**
1	50056927	Complete Yoke	1
2	50056400	Cross Journal Set	2
3	------	Circlip	12
4	76335	Grease Nipple	3
5	76357	Wide Angle Double Yoke	1
6	76896	Outer Yoke	1
7	67108	Roll Pin - Outer & Inner Tube	1
8	76897	Wiper	1
9	50075190	Complete Outer Tube	1
10	50075191	Inner Tube	1
11	67085	Roll Pin For Inner Tube	1
12	50071244	Inner Yoke	1
13	50056401	Cross Journal Set	1
14	76239BH	Complete Yoke	1
15	------	Guard Cone	1
16	76362	Screw Kit	6
17	50056402	Bearing Ring	1
18	50056403	Guard Ret. Collar - Outer Tube	1
19	50056404	Bolt	6
20	50056405	Guard Ret. Collar - Inner Tube	1
22	50075192	Guard Cone Set	1
23	50075193	Complete Guard w/Inst. Manual	1
24	------	Outer Circlip	1
25	------	Sliding Sleeve Collar	1
26	------	Spring	1
27	------	Fixed Sleeve	1
28	------	Ball, 1/2"	3
29	------	Yoke	1
30	76247	Tapered Pin Set 1-3/4"	1
31	------	Female Tube w/Yoke	1
32	------	Male Tube w/Yoke	1
33	------	Half Female Guarding w/Label	1
34	------	Half Male Guarding	1
35	------	Half Female Shaft w/Guarding	1
36	------	Half Male Shaft w/Guarding	1
37	78786	Decal, Danger - Outer Tube	1
38	78608	Decal, Danger - Outer Guard Tube	1
39	76899	Plastic Cap - Outer Tube	1
40	50071247	Plastic Cap - Inner Tube	1
41	50017502	Kit Collar For Yoke 1-3/4"	1

© 2016 Alamo Group Inc.

50082326SP C.V. Driveshaft
Input : 1-3/8" – Z21, ASAE Size 6
Manufactured by Comer / EG
14815RR1 (1000 RPM Models)

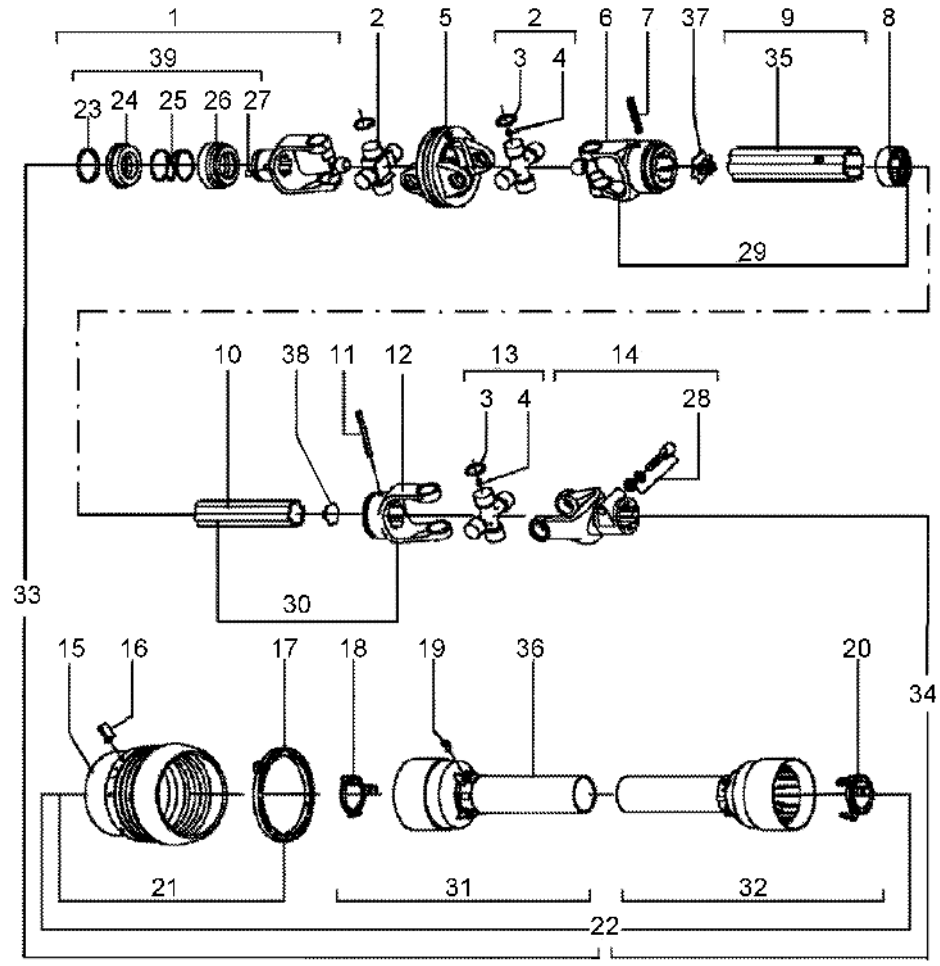

REF. NO.	PART NO.	DESCRIPTION	QTY.
	50082326SP	**Assembly, Driveline**	**1**
1	50017503	Compl. Collar Yoke for CV-Joint	1
2	50056400	Cross Journal Set	2
3	------	Circlip	12
4	76335	Grease Nipple	3
5	76357	Wide Angle Double Yoke	1
6	76896	Outer Yoke	1
7	67108	Roll Pin - Outer Tube	1
8	76897	Wiper	1
9	50075190	Complete Outer Tube	1
10	50075191	Inner Tube	1
11	67085	Roll Pin For Inner Tube	1
12	50071244	Inner Yoke	1
13	50056401	Cross Journal Set	1
14	76239BH	Complete Yoke	1
15	------	Guard Cone	1
16	76362	Screw Kit	6
17	50056402	Bearing Ring	1
18	50056403	Guard Ret. Collar - Outer Tube	1
19	50056404	Bolt	6
20	50056405	Guard Retaining Collar for Inner Tube	1
21	50075192	Guard Cone Set	1
22	50075193	Complete Guard w/Inst. Manual	1
23	------	Outer Circlip	1
24	------	Sliding Sleeve Collar	1
25	------	Spring	1
26	------	Fixed Sleeve	1
27	------	Ball, 1/2"	3
28	76247	Tapered Pin Set 1-3/4"	1
29	------	Female Tube w/Yoke	1
30	------	Male Tube w/Yoke	1
31	------	Half Female Guarding w/Label	1
32	------	Half Male Guarding	1
33	------	Half Female Shaft w/Guarding	1
34	------	Half Male Shaft w/Guarding	1
35	78786	Decal, Danger - Outer Tube	1
36	78608	Decal, Danger - Outer Guard Tube	1
37	76899	Plastic Cap - Outer Tube	1
38	50071247	Plastic Cap - Inner Tube	1
39	50017480	Kit Collar For Yoke 1-3/8"	1

© 2016 Alamo Group Inc.

TONGUE, LEVELING ROD & RELATED PARTS
FOR 4815RR1 & 4810RR1, 14815RR1 & 14810RR1 MODELS

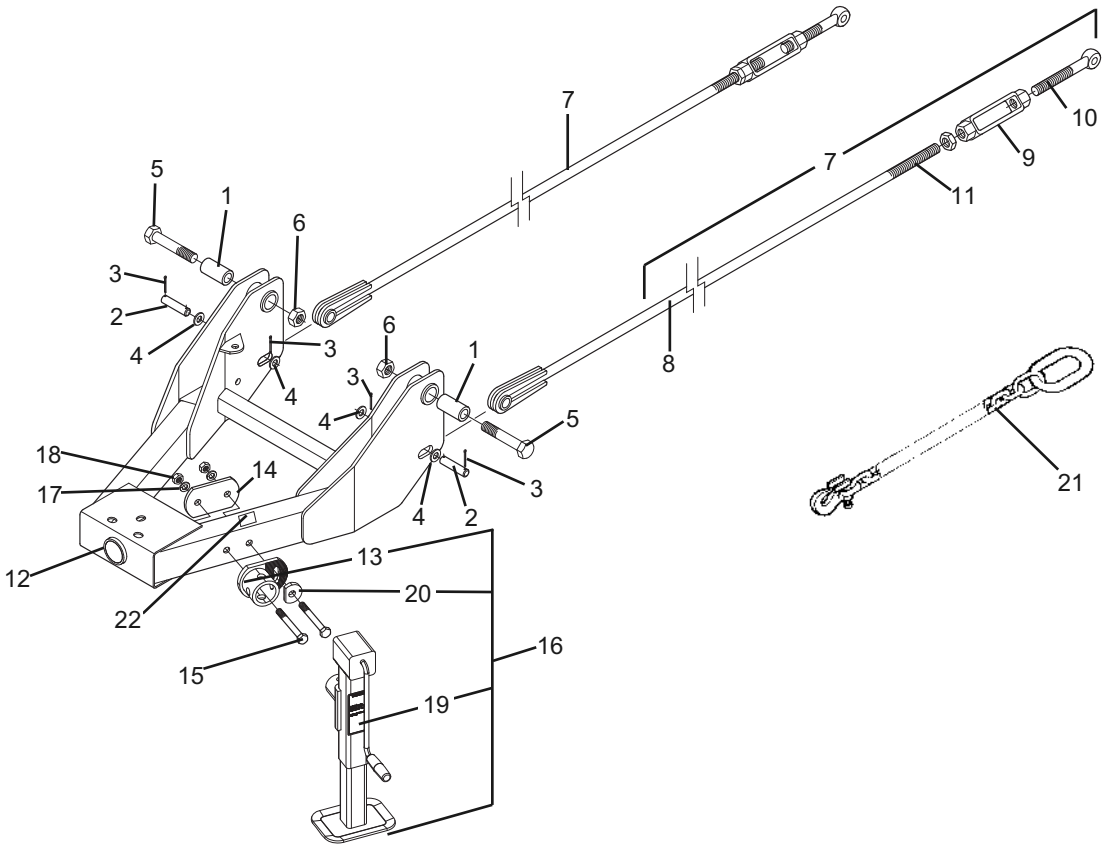

REF. NO.	PART NO.	DESCRIPTION	QTY.
1	50054456	Sleeve Bushing	2
2	50054389	Clevis Pin	2
3	20167	Cotter Pin, 3/16” x 2”	4
4	20376	Flatwasher, 1” SAE	4
5	19137	Capscrew, 1” x 5-1/2”	2
6	9163200	Locknut, 1”	2
7	50054463	Leveling Rod Assy	2
8	50054461	Rod Weldment	1
9	53053BH	Turnbuckle	1
10	60636	Turnbuckle End	1
11	15612	Hex Jam Nut	1
12	50069248	Tongue Weldment	1
13	00779360	Bracket, Jack Weldment	1
14	50069926	Mount Pad	1
15	44064BH	Capscrew, 3/4” x 5”	2
16	00779350	Jackstand Assy (Includes Items 13, 19 & 20)	1
17	146	Lockwasher, 3/4”	2
18	19517	Hex Nut, 3/4”	2
19	D482	Decal, Warning	1
20	00779361	Washer, Jack	1
21	91074	Safety Tow Chain	1
22	D1085	Decal, Notice	1

© 2016 Alamo Group Inc.

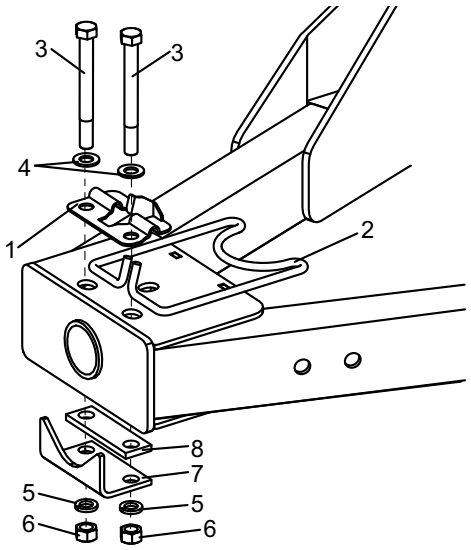

DRIVELINE HOLDER ASSEMBLY
For 4815RR1 & 4810RR1, 14815RR1 & 14810RR1 Models

REF. NO.	PART NO.	DESCRIPTION	QTY.
1	50054710	Mounting Bracket Weld.	1
2	50054711	Formed Driveline Holder	1
3	20923	Capscrew, 5/8" x 6"	2
4	20748	Flatwasher, 5/8" SAE	2
5	19486	Lockwasher, 5/8"	2
6	15563	Hex Nut, 5/8"	2
7	50081372	Formed Stop	1
8	50081373	Pad	1
9	-------	Instruction Sheet (50080870)	1

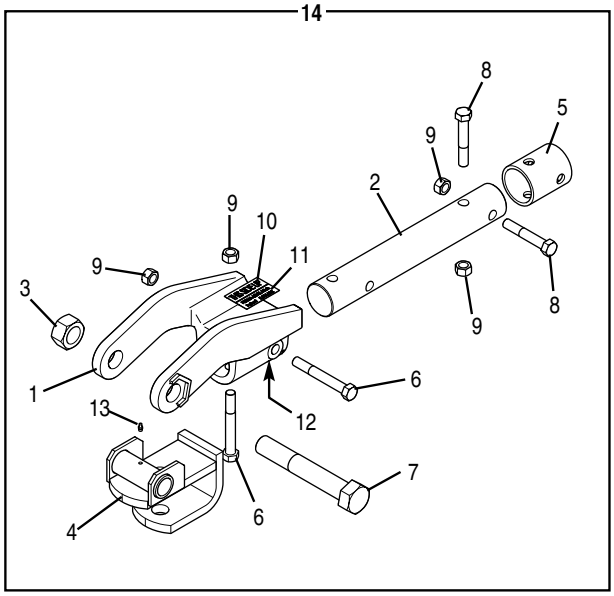

SWIVEL PIVOT HITCH ASSEMBLY
For 4815RR1 & 4810RR1, 14815RR1 & 14810RR1 Models

REF. NO.	PART NO.	QTY.	DESCRIPTION
1	50074196	1	Hitch w/Decals
2	50074187	1	Shaft
3	15521	1	Locknut, 1-1/4" Gr. C
4	50080681	1	Clevis Assembly
5	86356	1	Collar
6	------	2	Capscrew, 5/8" x 4-3/4" Gr. 5
7	45324	1	Capscrew, 1-1/4" x 8" Gr. 5
8	44168BH	2	Capscrew, 5/8" x 3-3/4" Gr. 5
9	15598BH	4	Locknut, 5/8"
10	50035874	1	Decal, Direction
11	97692	1	Decal, Patent
12	50045639	1	Decal, Direction
13	449BH	1	Grease Fitting
14	**50054505SP**	**1**	**Swivel Pivot Hitch Assy**

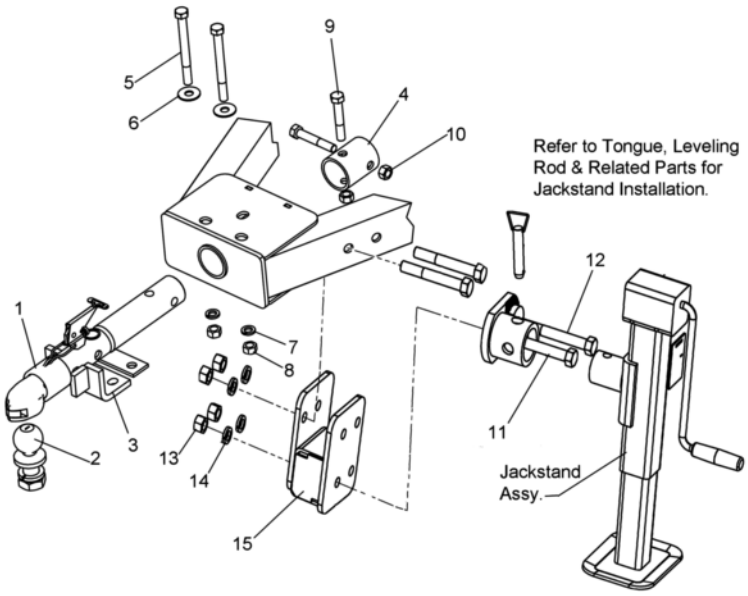

50072803 - BALL HITCH ASSEMBLY
For 4815RR1 & 4810RR1, 14815RR1 & 14810RR1 Models

REF. NO.	PART NO.	DESCRIPTION	QTY.
1	50072805	Weldment, Ball Hitch	1
2	50068048	Assembly, 2-5/16" Hitch Ball	1
3	50072808	Bracket, Mount Spacer	1
4	86356	Collar, Clevis Pin	2
5	20294	Capscrew, 5/8" x 6-1/2" Gr. 5	2
6	15925	Flatwasher, 5/8"	2
7	19486	Lockwasher, 5/8"	2
8	15563	Hex Nut, 5/8"	2
9	44120BH	Capscrew, 5/8" x 3-3/4" NF Gr. 5	2
10	15516	Locknut, 5/8" NF, Gr. C	2
11	19037	Capscrew, 3/4"x5-1/2" G5	1
12	20207	Capscrew, 3/4" x 6" G5 ZP	1
13	19517	Hex Nut, 3/7" CP	2
14	146	Lockwasher, 3/4" ZP	2
15	50082534	Jack Mount Adaptor Weldment	1

© 2016 Alamo Group Inc.

EZ MOUNT - CV DRIVELINE PARKING STAND

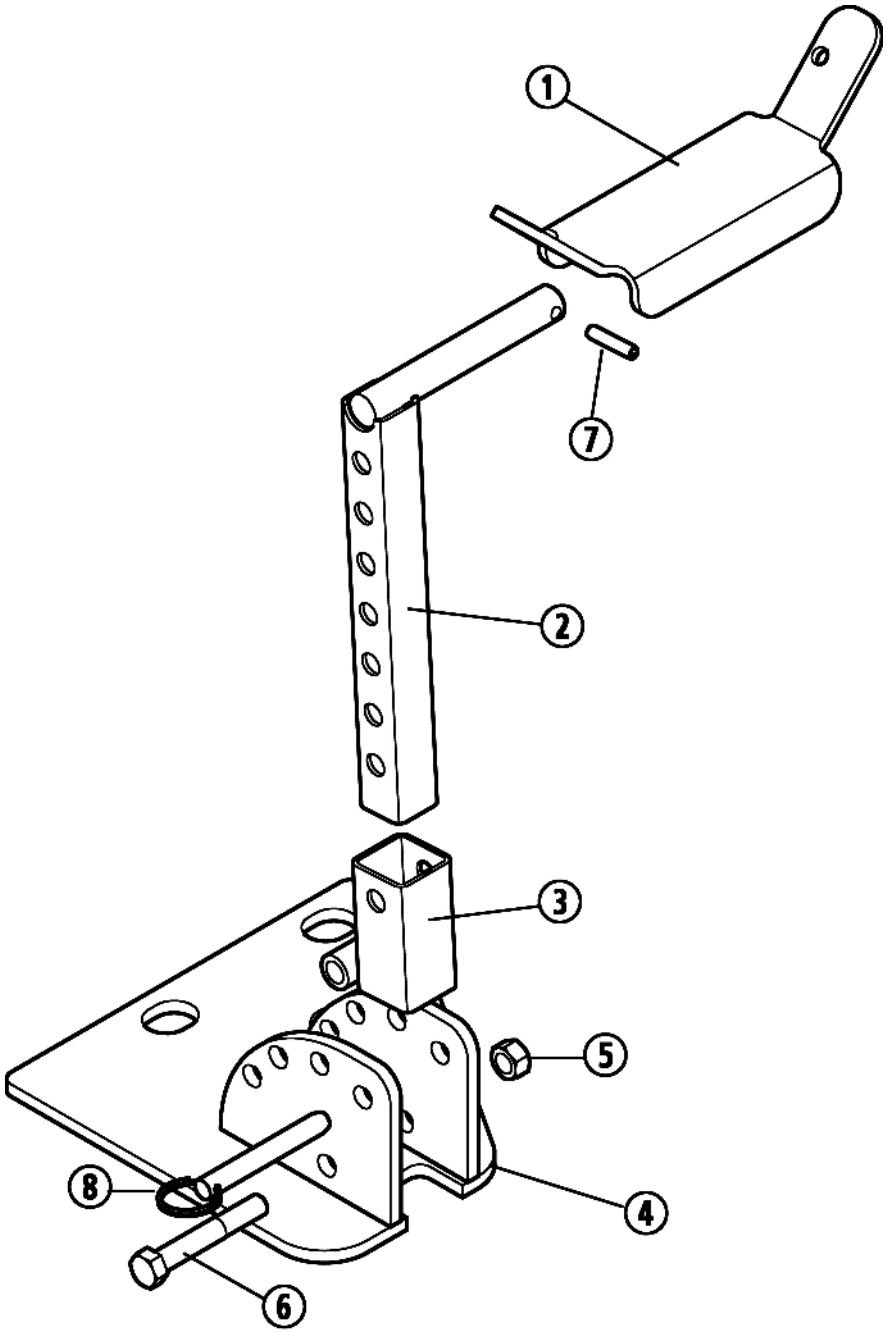

REF. NO.	PART NO.	DESCRIPTION	QTY.
	50077430	EZ Mount Driveline Holder Assy.	1
1	50077435	Saddle Weldment	1
2	50077434	Adjustment Tube Weldment	1
3	50077433	Pivot Mount	1
4	50077634	Base Weldment w\Decal	1
5	20360	Locknut 3/8”	1
6	20224	Bolt 3/8” x 2-1/2” Gr.5	1
7	44533	Roll Pin 7/32” x 1”	1
8	50077436	Quick Pin	1

© 2016 Alamo Group Inc.

AXLES & RELATED PARTS
FOR 4815RR1 & 4810RR1, 14815RR1 & 14810RR1 MODELS

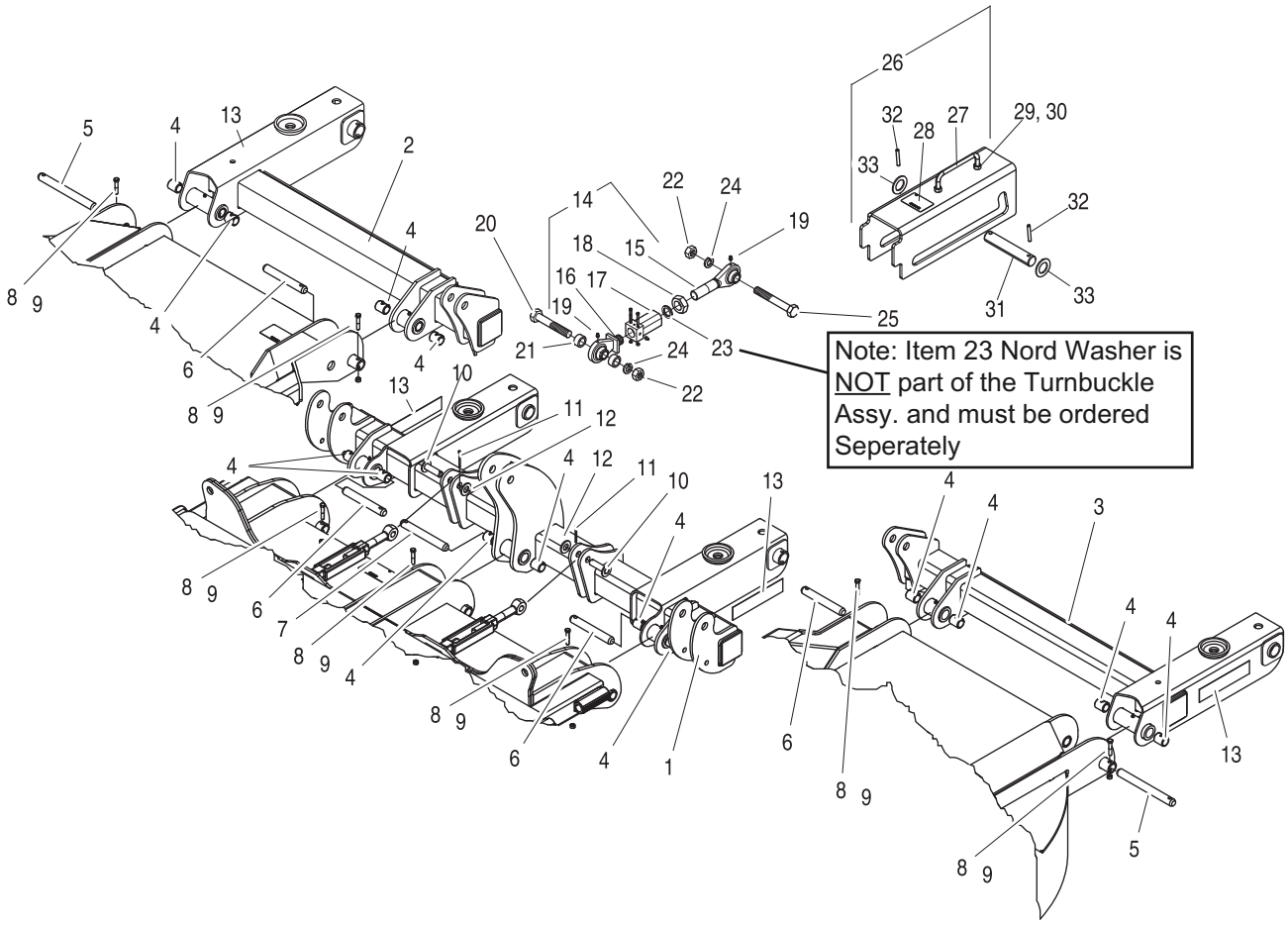

REF. NO.	PART NO.	DESCRIPTION	QTY.
1	50070908	Center Axle w/Wear Bearings	1
2	50070909	Wing Axle w/Wear Bushings R.H.	1
3	50070910	Wing Axle w/Wear Bushings L.H.	1
4	50021149	Wear Bushing	14
5	50029760	Pin, Pivot, 1” x 9.88”	2
6	50054388	Pin, Pivot, 1” x 7.25”	4
7	50054387	Pin, Pivot, 1” x 8”	1
8	1161220	Capscrew, 3/8” x 2” Gr. 5	7
9	9131200	Locknut, 3/8”	7
10	14-32-49	Clevis Pin	2
11	20167	Cotter Pin, 3/16” x 2”	2
12	15922	Flatwasher, 7/8” SAE	2
13	50031212	Reflector, Amber	4
14	50052742	Turnbuckle Swivel Assy (15-19)	2
15	50052745	Rod Eye, Threaded	2
16	50052744	Rod Eye, Swivel	2
17	50052743	Turnbuckle Body	2

REF. NO.	PART NO.	DESCRIPTION	QTY.
18	50052746	Locknut, 1-1/4”	2
19	449BH	Grease Fitting	6
20	19137	Capscrew, 1” x 5-1/2” Gr. 5	2
21	50052732	Spacer, .75”	4
22	9163200	Locknut, 1”	2
23	50038405	Nord-Lockwasher, 1-1/4”	2
24	15821	Lockwasher, 1”	4
25	20547BH	Capscrew, 1” x 4-1/2” Gr. 5	2
26	50069408	Transport Lockout Assy	1
27	50027637	U-Bolt	1
28	D544	Decal, Important	1
29	45073	Hex Nut, 3/8” YZ	2
30	45105BH	Locknut, 3/8” YZ	2
31	50069413	Cylinder Pin, 5-5/8” Lg.	1
32	20325	Roll Pin, 1/4” x 1-3/4”	2
33	45057BH	Flatwasher, 1”	2

© 2016 Alamo Group Inc.

AXLE ARMS & RELATED PARTS
SINGLE & DUAL SPINDLE
FOR 4815RR1 & 4810RR1, 14815RR1 & 14810RR1 MODELS

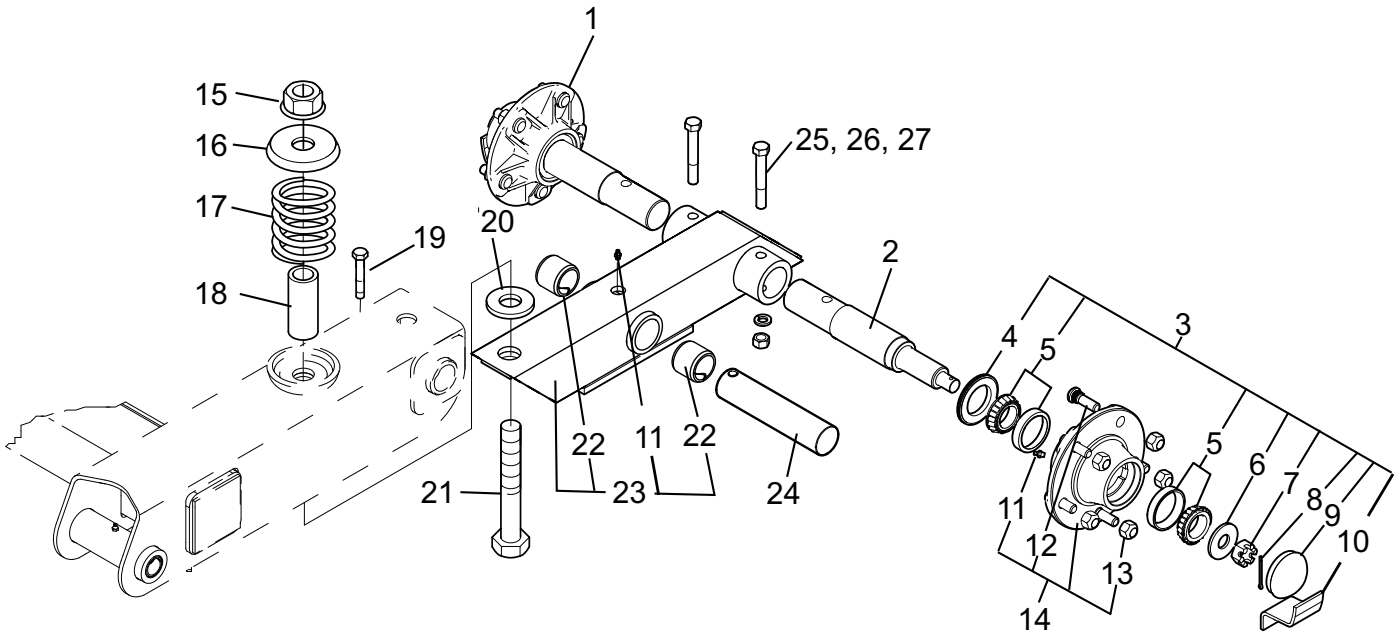

REF. NO.	PART NO.	DESCRIPTION	QTY.
	50073178	**RH Single Spindle Axle Assy.**	**1**
	50073179	**LH Single Spindle Axle Assy.**	**1**
	50073180	**Dual Spindle Axle Assy.**	**2**
1	50073131	Spindle and Hub Assembly for Dual Wheel	2
	50073131	Spindle and Hub Assembly for Single Wheel	1
2	50073119	Spindle	1
3	50035756	Bearing Repair Kit, Hub	1
4	7967	Seal, Grease	1
5	50076BH	Bearing, Roller Cone	2
6	15920	Washer, 3/4” SAE	1
7	120BH	Nut, Slotted 3/4” UNF	1
8	15973	Pin, Cotter 1/8” x 1-1/2”	1
9	14-6-243	Cap, Grease	1
10	00779390	Retainer, Hub Cap	2
11	449BH	Grease Fitting	2
12	15445	Lug Bolt	5
13	15515BH	Lug Nut	5
14	50035740	Hub Assembly	1
15	44524BH	Locknut 1” Flanged	1
16	91152	Cup, Spring	1
17	50070462	Spring, Coil	1
18	50070560	Stop, Spring	1
19	20224	Capscrew 3/8” x 2-1/2” Gr.5	1
20	91261	Cushion, Rubber	1
21	20860	Capscrew 1” x 7-1/2” Gr.5	1
22	50028543	Bushings, Spring 1-1/2”	2
23	50073133	Tube Assembly	1
24	50028461	Pin, Pivot	1
25	20071	Capscrew 1/2” x 4” Gr. 5	1
26	15806	Lockwasher 1/2”	1
27	15554	Locknut 1/2”	1

© 2016 Alamo Group Inc.

TANDEM AXLE ASSEMBLY (CURRENT STYLE)
FOR 4815RR1 & 4810RR1, 14815RR1 & 14810RR1 MODELS

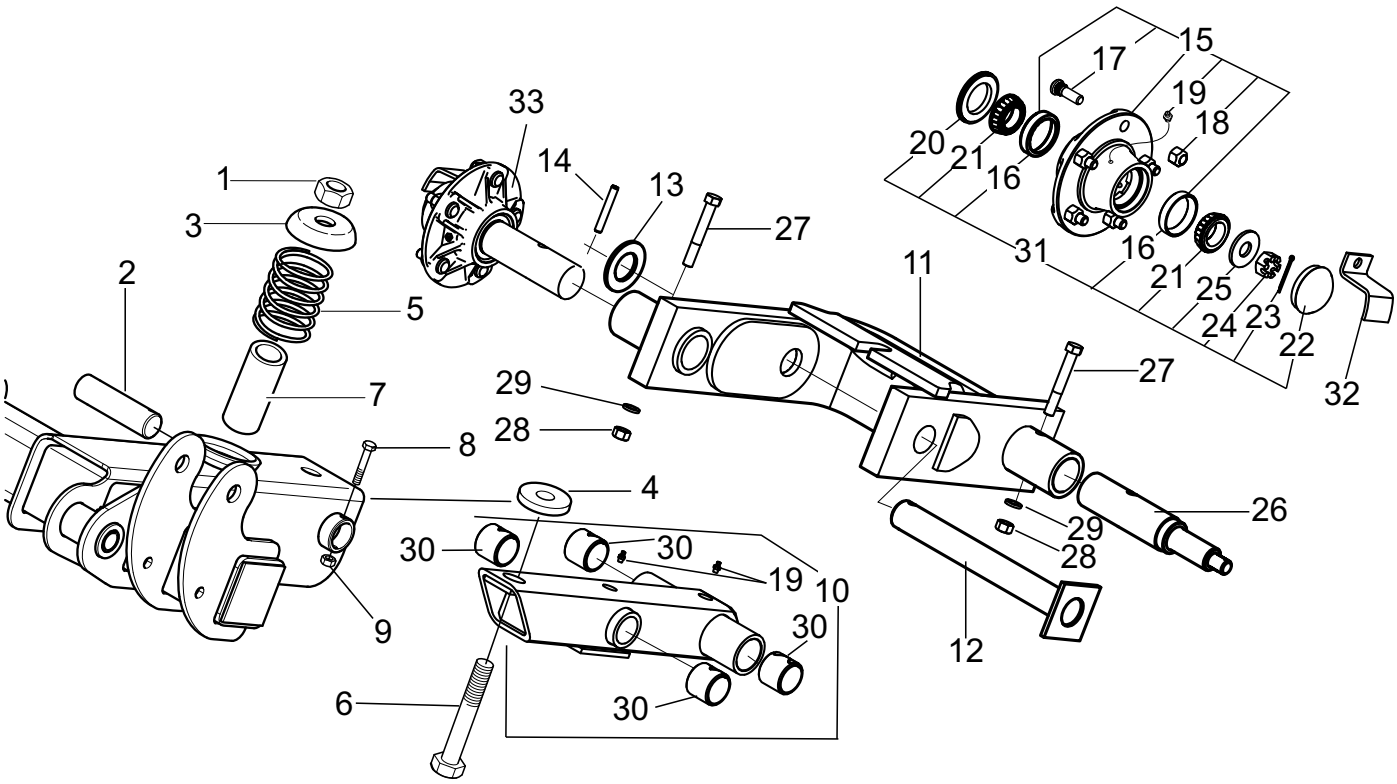

REF. NO.	PART NO.	DESCRIPTION	QTY.
1	44524BH	Locknut, 1” Flanged	4
2	50028461	Pin, Pivot, 1.50” x 7.50”	4
3	91152	Spring Cup	4
4	91261	Rubber Cushion	4
5	50070462	Spring, Coil	4
6	20860	Capscrew, 1” x 7-1/2”	4
7	50070560	Spring Stop	4
8	20224	Capscrew, 3/8” x 2-1/2” Gr. 5	4
9	20363	Locknut, 3/8”	4
	50076582	**Tandem Axle Assy L.H. (Shown)**	**1**
	50076583	**Tandem Axle Assy R.H.**	**1**
10	50076570	Tube Assy w/Grease Fittings	1
11	50076574	Spindle Weldment L.H. (Shown)	1
	50076575	Spindle Weldment R.H.	1
12	50076566	Pin Weldment	1
13	15924	Flatwasher, 1-1/2”	1
14	53065	Spiral Pin, 3/8” x 2-1/2”	1
15	50035740	Hub Assembly	2
16	14-6-197	Bearing Cup	4
17	15445	Lug Bolt	10
18	15515BH	Lug Nut	10
19	449BH	Grease Fitting	4
20	7967	Seal	2
21	50076BH	Bearing Cone, Inner	4
22	14-6-243	Hub Cap	2
23	296	Cotter Pin, 1/8” x 1-1/2”	2
24	120BH	Nut, Slotted, 3/4” NF	2
25	15920	Flatwasher, 3/4” SAE	2
26	50041170	Spindle, 9.82” (Short)	2
27	20779	Capscrew, 1/2” x 3-1/2”	2
28	15554	Locknut, 1/2”	2
29	15806	Lockwasher, 1/2”	2
30	50028543	Spring Bushing	4
31	50035756	Bearing Repair Kit	1
32	00779390	Hub Cap Retainer	2
33	50073145	Spindle & Hub Assy.	2

© 2016 Alamo Group Inc.

WHEEL AND TIRE ASSEMBLIES
Models: 4815RR1 & 4810RR1, 14815RR1 & 14810RR1

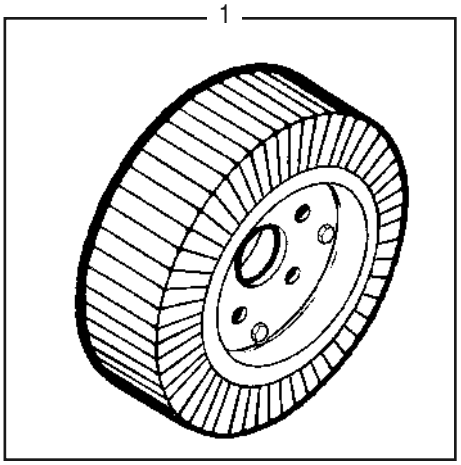

294SP SOLID TIRE ASSEMBLY
20” Diameter

REF. NO.	PART NO.	DESCRIPTION	QTY.
1	294SP	Solid Tire Assembly	1

50075401SP SEGMENTED TIRE ASSY.
25” Diameter

REF. NO.	PART NO.	DESCRIPTION	QTY.
1	50075401SP	Segmented Tire Assembly	1

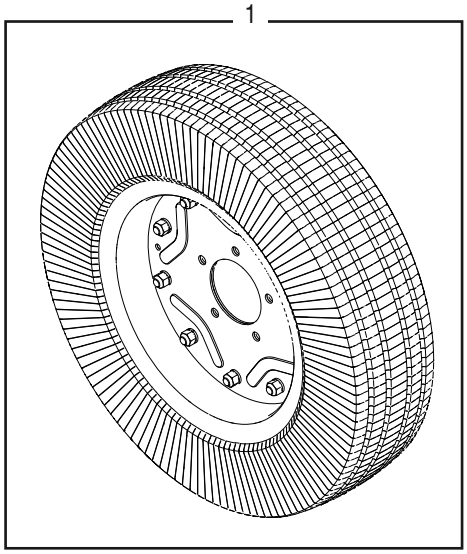

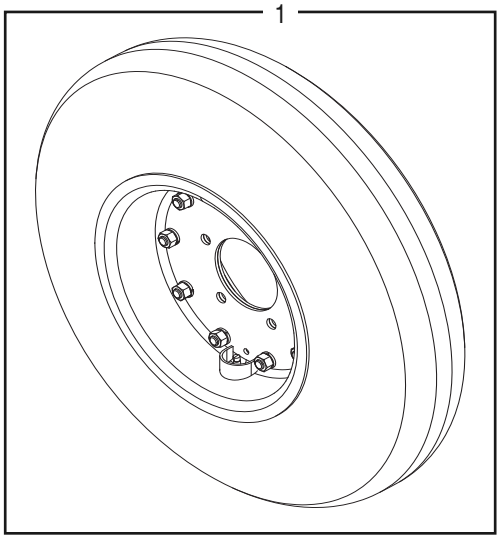

50072403SP AIR FILLED AIRPLANE TIRE ASSY.
24Ply 27.75” x 8.75”- 14.5”

REF. NO.	PART NO.	DESCRIPTION	QTY.
1	50072403SP	Air Filled Tire Assembly 27.75” x 8.75” -14.5”1	

© 2016 Alamo Group Inc.

WHEEL AND TIRE ASSEMBLIES
Models: 4815RR1 & 4810RR1, 14815RR1 & 14810RR1

50050727SP AIRPLANE TIRE ASSEMBLY

REF. NO.	PART NO.	DESCRIPTION	QTY.
1	50051233BH	Tire 29 x 9.0 - 15/16 Ply	1
2	50051234	Tube 9 x 15	1
3	50073233	Wheel Flange Set	1
4	20054	Capscrew, 1/2" x 1" Gr. 5	10
5	15804	Lockwasher, 1/2"	10
6	15508	Hex Nut, 1/2"	10
7	**50050727SP**	**Tire Assembly**	**1**

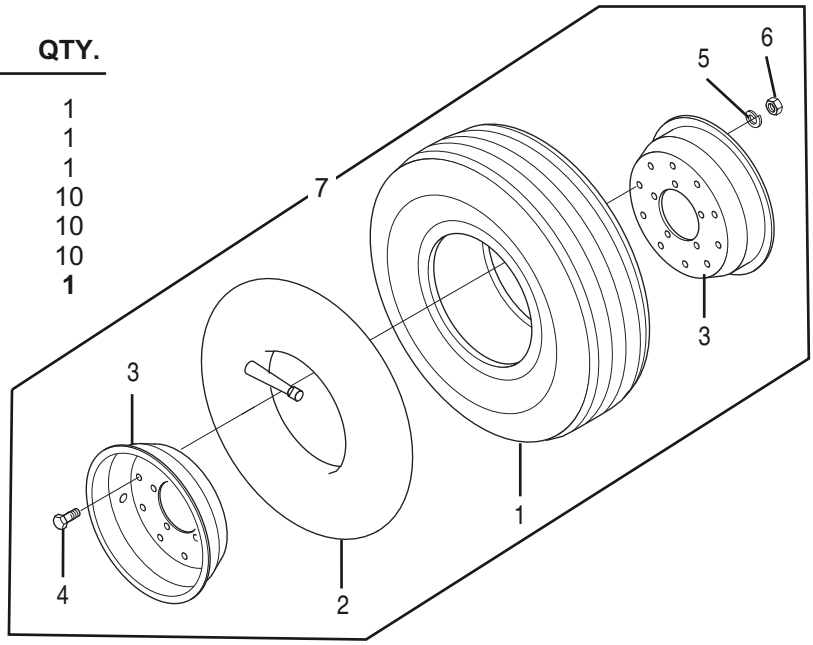

50077775SP FOAM FILLED AIRPLANE TIRE ASSY. 25" x 7"- 18"

REF. NO.	PART NO.	DESCRIPTION	QTY.
1	50077775SP	Foam Filled Tire Assembly 25" x 7"- 18"	1

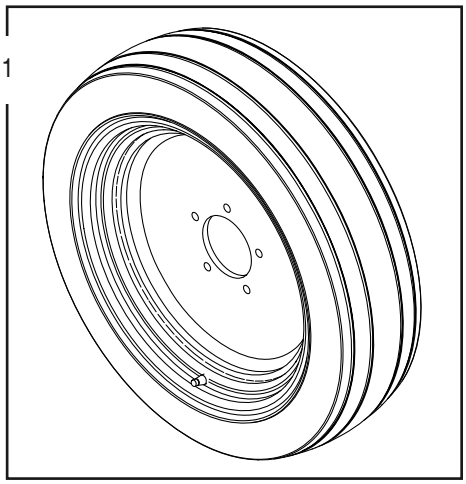

© 2016 Alamo Group Inc.

WHEEL AND TIRE ASSEMBLIES
Models: 4815RR1 & 4810RR1, 14815RR1 & 14810RR1

50068834SP FOAM FILLED AIRPLANE TIRE ASSY. 26” x 6.6”- 14”

REF. NO.	PART NO.	DESCRIPTION	QTY.
1	50068834SP	Foam Filled Tire Assembly 26” x 6.6”- 14”	1

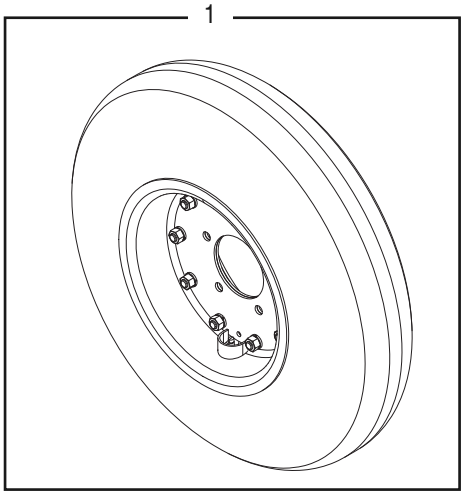

50083457SP FOAM FILLED TIRE ASSY. 25.5” x 8”- 14”

REF. NO.	PART NO.	DESCRIPTION	QTY.
1	50083457SP	Foam Filled Tire Assembly 25.5” x 8”- 14”	1

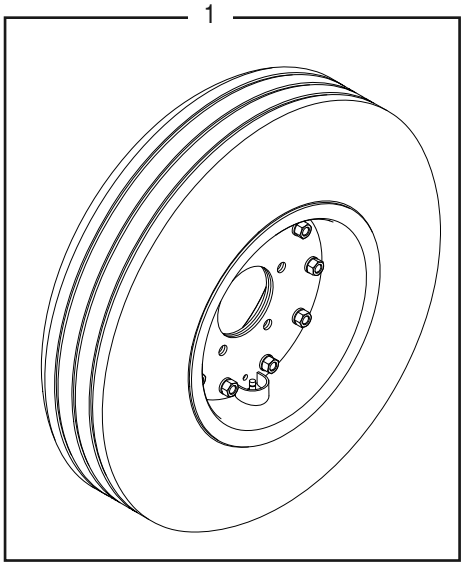

© 2016 Alamo Group Inc.

BAFFLE KIT
FOR 4815RR1 & 4810RR1, 14815RR1 & 14810RR1 MODELS

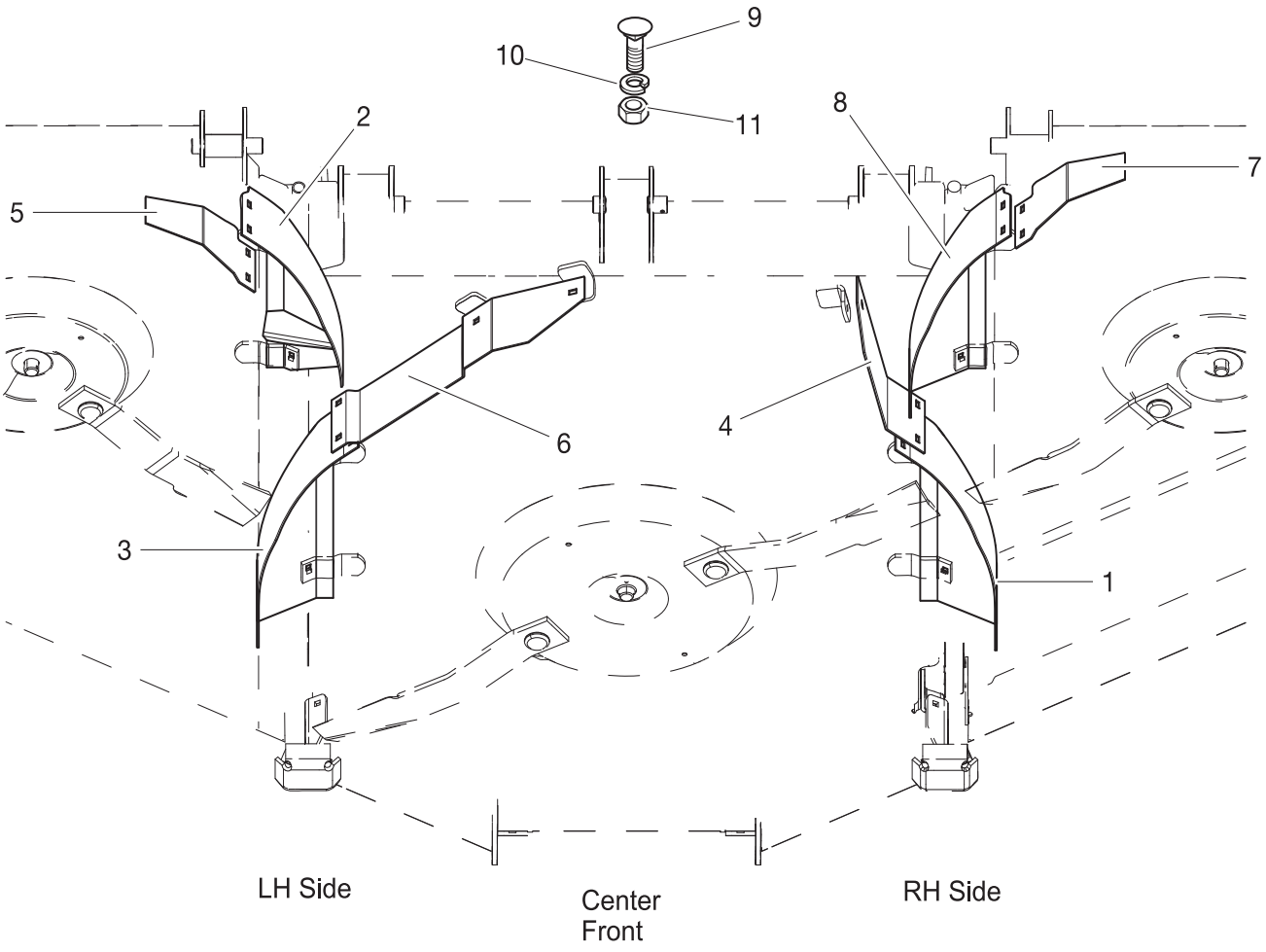

REF. NO.	PART NO.	DESCRIPTION	QTY.
1	50070222	Baffle Weldment R.H. Wing	1
2	50070223	Baffle Weldment L.H. Wing (4815, 14815 Only)	1
3	50070224	Baffle Weldment L.H. Center	1
4	50070225	Baffle Extension R.H. Center	1
5	50070228	Baffle Extension L.H. Wing (4815, 14815 Only)	1
6	50070229	Baffle Extension L.H. Center	1
7	50070232	Baffle Extension R.H. Wing	1
8	50070219	Baffle Weldment R.H. Wing	1
9	44286	Carriage Bolt, 3/8” x 1-1/2 Gr. 5	9
10	15802	Lockwasher, 3/8”	9
11	8151200	Hex Nut, 3/8”	9

© 2016 Alamo Group Inc.

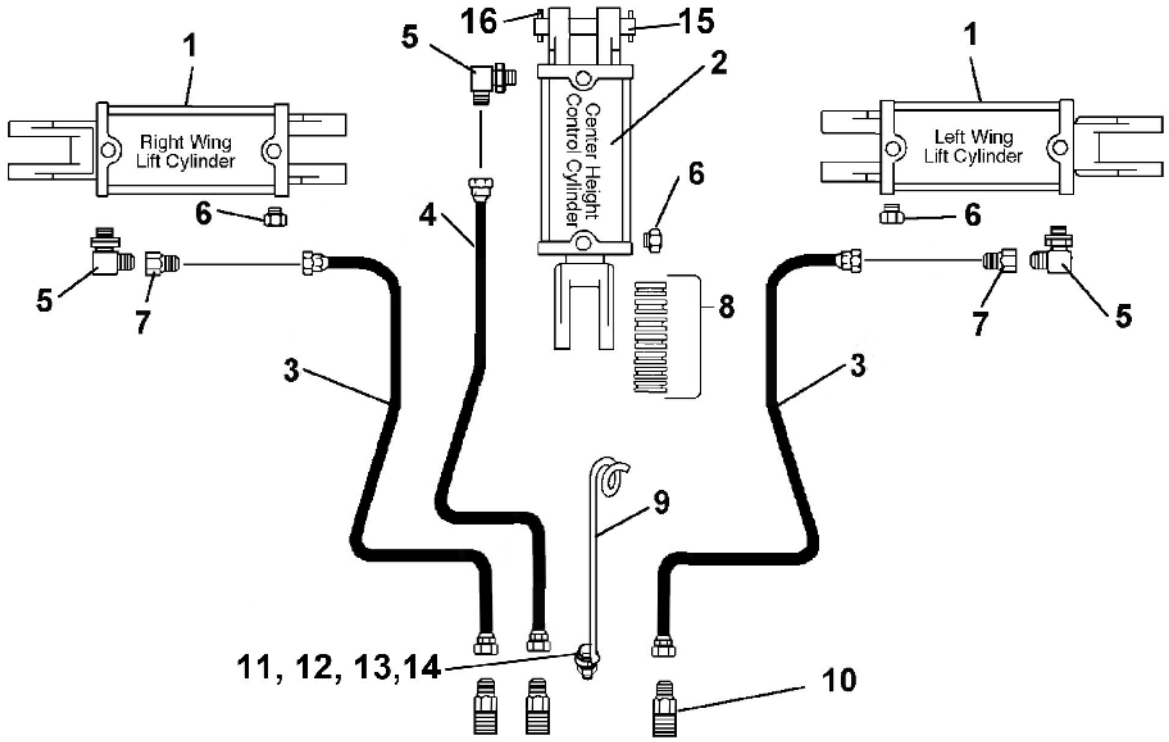

HYDRAULICS FOR 4815RR1 & 14815RR1 MODELS WHEN PLUMBING TO TRACTOR WITH 3 REMOTES

REF. NO.	PART NO.	DESCRIPTION	QTY.
1	99564	Wing Lift Cylinder	2 (mfg'd by Monarch)
	50081895	Wing Lift Cylinder	2 (mfg'd by Bailey)
2	99565	Axle Control Cylinder	1 (mfg'd by Monarch)
	50081896	Axle Control Cylinder	1 (mfg'd by Bailey)
3	62774	Hydraulic Hose Assy. 228"	2
4	50015063	Hydraulic Hose Assy. 196"	1
5	14-40-98	Elbow 90 degree	3
6	86500	Breather Plug	3
7	50068458	Restrictor, .078 Orfice	2
8	63451	Stop Kit	1
9	12031	Rod,Hose Holder	1
10	53340BH	Adaptor 9/16 JIC to 3/4 SAE	3
	24-6-434	Adaptor 9/16 JIC to 1/2 NPT	3
11	20947	Capscrew, 5/8" x 2" Gr. 5	1
12	15925	Flatwasher, 5/8"	1
13	19486	Lockwasher, 5/8"	1
14	15563	Hex Nut, 5/8"	1
15	50069414	Cylinder Pin, 6-5/8" Lg.	1
16	20325	Roll Pin, 1/4" x 1-3/4"	2

© 2016 Alamo Group Inc.

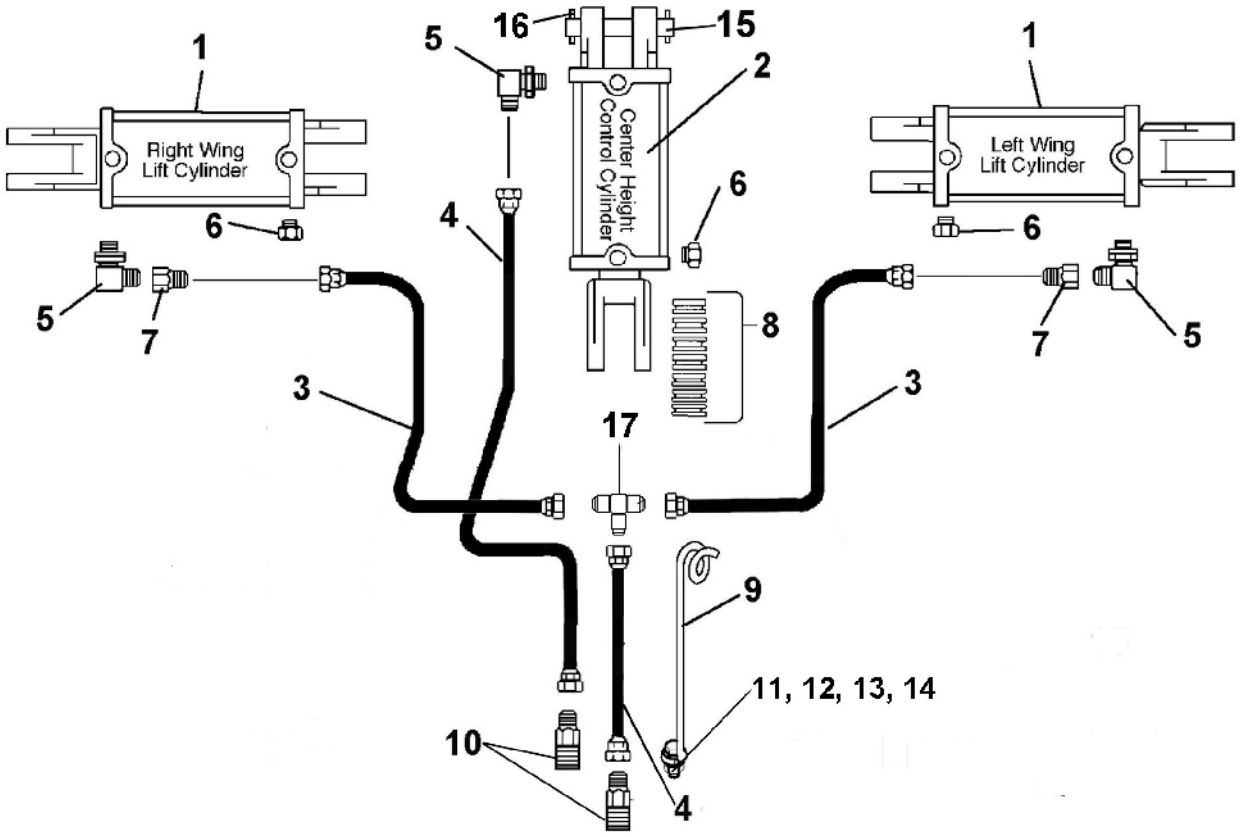

HYDRAULICS FOR 4815RR1 & 4810RR1, 14815RR1 & 14810RR1 MODELS WHEN PLUMBING TO TRACTOR WITH 2 REMOTES

REF. NO.	PART NO.	DESCRIPTION	QTY.
1	99564	Wing Lift Cylinder	2 (mfg'd by Monarch)
	50081895	Wing Lift Cylinder	2 (mfg'd by Bailey)
2	99565	Axle Control Cylinder	1 (mfg'd by Monarch)
	50081896	Axle Control Cylinder	1 (mfg'd by Bailey)
3	62430	Hydraulic Hose Assy. 228"	2
4	50015063	Hydraulic Hose Assy. 196"	2
5	14-40-98	Elbow 90 degree	3
6	86500	Breather Plug	3
7	50068458	Restrictor, .078 Orfice	2
8	63451	Stop Kit	1
9	12031	Rod,Hose Holder	1
10	53340BH	Adaptor 9/16 JIC to 3/4 SAE	2
	24-6-434	Adaptor 9/16 JIC to 1/2 NPT	2
11	20947	Capscrew, 5/8" x 2" Gr. 5	1
12	15925	Flatwasher, 5/8"	1
13	19486	Lockwasher, 5/8"	1
14	15563	Hex Nut, 5/8"	1
15	50069414	Cylinder Pin, 6-5/8" Lg.	1
16	20325	Roll Pin, 1/4" x 1-3/4"	2
17	53339BH	Tee, Gflare	1

© 2016 Alamo Group Inc.

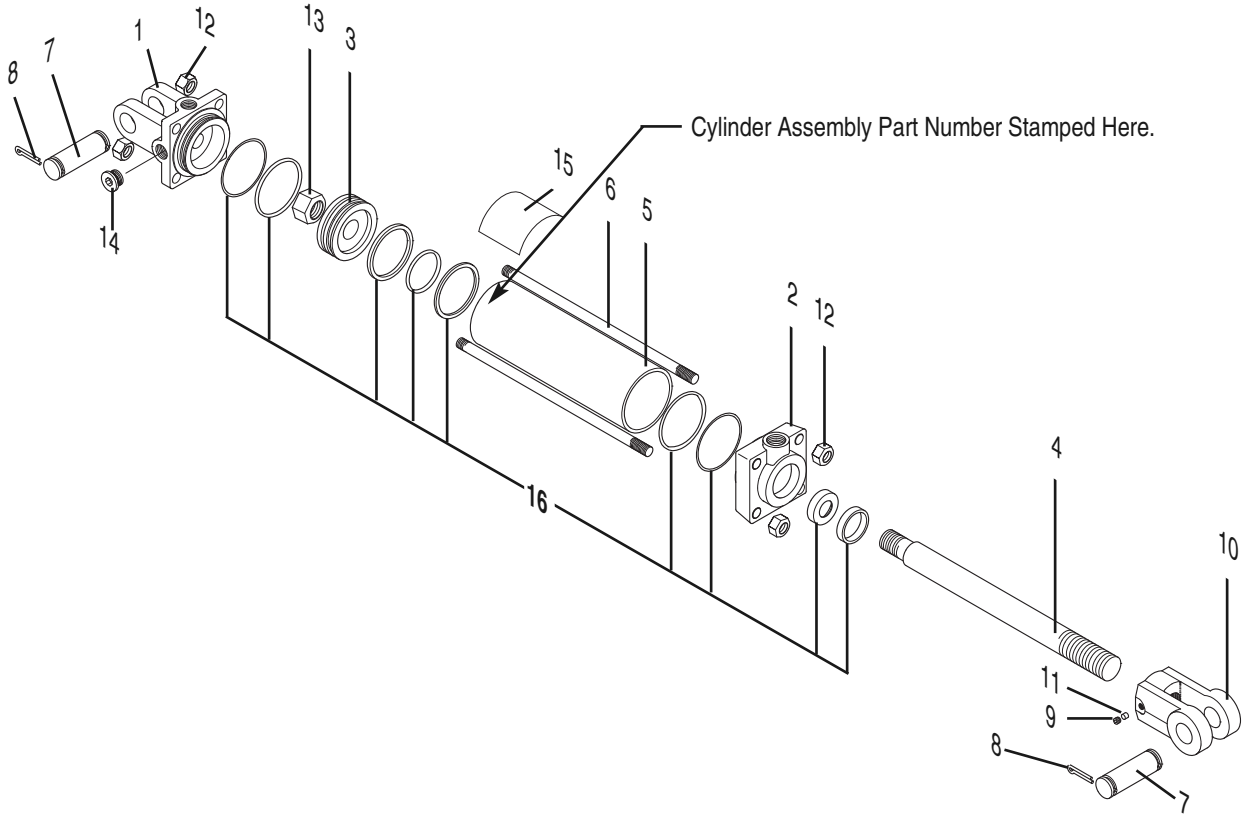

99565 AXLE HYDRAULIC CYLINDER

3.5” Bore x 8” Stroke 1.25 Rod Diameter
3/4” – 16 ORB Ports
Manufactured by Monarch

REF. NO.	PART NO.	DESCRIPTION	QTY.
1	95429	Clevis Cap	1
2	95430	Rod Cap	1
3	50017628	Piston	1
4	95431	Rod 1.25” Dia.	1
5	95426	Cylinder Tube	1
6	95427	Tie Rod	4
7	95425	Pin, 1” Dia.	2
8	21020614	Cotter Pin, 3/16” x 1-1/2”	4
9	95433	Thread Lock	1
10	95428	Rod Clevis, 1.25” x 1”	1
11	95422	Set Screw, 3/8” x 1/2 Knurled	1
12	95420	Hex Nut, 5/8” UNF	8
13	95421	Hex Nut, 1”-14	1
14	95435	Plug, 3/4”	1
15	50042072	Decal, Caution	1
16	**50017623**	**Seal Kit**	**1**

99564 WING HYDRAULIC CYLINDER

3” Bore x 12” Stroke 1.25” Rod Diameter
3/4” – 16 ORB Ports
Manufactured by Monarch

REF. NO.	PART NO.	DESCRIPTION	QTY.
1	95440	Clevis Cap	1
2	95439	Rod Cap	1
3	50017627	Piston	1
4	95436	Rod 1.25” Dia.	1
5	95437	Cylinder Tube	1
6	95438	Tie Rod	4
7	95425	Pin, 1” Dia.	2
8	21020614	Cotter Pin, 3/16” x 1-1/2”	4
9	95433	Thread Lock	1
10	95428	Rod Clevis, 1.25” x 1”	1
11	95422	Set Screw, 3/8” x 1/2 Knurled	1
12	8151600	Hex Nut, 1/2”-14 UNC	8
13	95421	Hex Nut, 1”-14	1
14	95435	Plug, 3/4”	1
15	50042072	Decal, Caution	1
16	**50017622**	**Seal Kit**	**1**

© 2016 Alamo Group Inc.

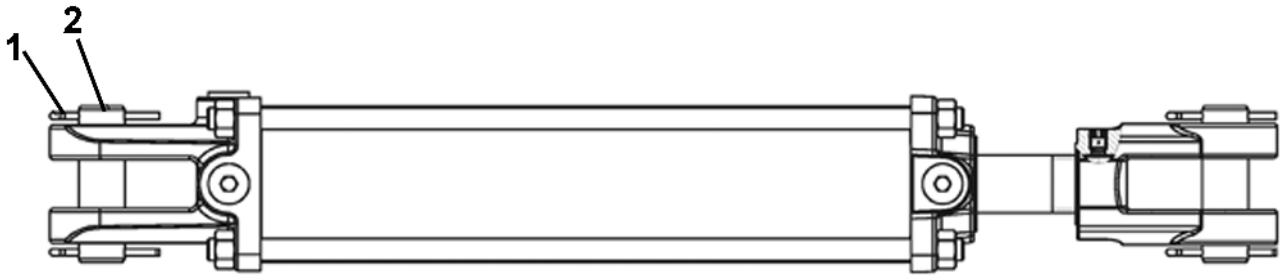

50081895
WING HYDRAULIC CYLINDER
3.00” Bore x 12.00” Stroke x 1.25 Rod Diameter
Manufactured by Bailey

REF. NO.	PART NO.	DESCRIPTION	QTY.
	50081895	**Hydraulic Cylinder Assembly**	**1**
1	21020614	Cotter Pin	4
2	95425	Pin, 1” Dia.	2
3	50082029	Seal Kit for 3.00” Bore (item not shown)	1

50081896
AXLE HYDRAULIC CYLINDER
3.50” Bore x 8.00” Stroke x 1.25” Rod Diameter
Manufactured by Bailey

REF. NO.	PART NO.	DESCRIPTION	QTY.
	50081896	**Hydraulic Cylinder Assembly**	**1**
1	21020614	Cotter Pin	4
2	95425	Pin, 1” Dia.	2
3	50082030	Seal Kit for 3.50” Bore (item not shown)	1

© 2016 Alamo Group Inc.

BUSH HOG®

2501 GRIFFIN AVE. • SELMA, AL 36703
WWW.BUSHHOG.COM